

Dosimetry

J. W. Poston, Sr.
Texas A. & M. University

I. Sources of Radiation
II. Quantities and Units
III. Interactions of Radiation with Matter
IV. Dosimetric Techniques, External
V. Dosimetric Techniques, Internal

GLOSSARY

This glossary is intended to define a few words in common use in the United States at this time. It is not intended to be exhaustive. Many other quantities and terms are defined in appropriate locations in the text. For additional definitions and concepts the reader is referred to publications of the National Council on Radiation Protection and Measurements (NCRP) and federal agencies such as the U.S. Nuclear Regulatory Commission (USNRC).

Absorbed dose Amount of energy deposited by ionizing radiation in a material per unit mass of the material. Usually expressed in the special radiological unit rad or in the SI unit gray.

Dose equivalent Product of the absorbed dose, quality factor, and other modifying factors. This quantity is used to express the effects of radiation absorbed dose from the many types of ionizing radiation on a common scale. The special radiological unit is the rem and the equivalent SI unit is the sievert.

Dosimeter Any device worn or carried by an individual to establish the total exposure, absorbed dose, or dose equivalent (or the rates) in the area or to the individual worker while he or she is occupying the area.

Exposure Quantity defined as the charge produced in air by photons interacting in a volume of air with a known mass. A general term used to indicate any situation in which an individual is in a radiation field.

Ionization Process of removing (or adding) one or more electrons from (or to) an atom or a molecule.

Isotope One of two or more atoms with the same number of protons but a different number of neutrons in their nuclei. A radio-isotope is an isotope of an element that is unstable and transforms by the emission of nuclear particles or electromagnetic radiation to reach a more stable state. A radio-isotope may also be called a radionuclide.

Radiation Used here to indicate ionizing radiation; that is, nuclear particles or electromagnetic radiation with sufficient energy to cause ionization of the atoms and molecules composing the material in which the radiation is interacting. Directly ionizing radiations are charged particles that interact directly with the electrons through coulombic interactions. These radiations include, for example, alpha particles, beta

particles, electrons, and protons. Indirectly ionizing radiations are uncharged radiations (e.g., X-rays, gamma rays, neutrons) that must interact with the material, producing a charged particle, which then causes further ionization in the material.

DOSIMETRY is the theory and application of principles and techniques associated with the measurement of ionizing radiation. In practice, dosimetry is divided into two primary categories: external dosimetry and internal dosimetry. External dosimetry usually encompasses the use of radiation-detection instrumentation that can be used to establish, or measure, the characteristics of the radiation field. These characteristics may include the type of radiation; the energy (or energy distribution) of the radiation; its intensity, angular dependence, time dependence, and location within an area; and many other parameters. From this knowledge, and the use of other devices (dosimeters), the absorbed dose or dose equivalent to individuals, or samples, in the radiation field can also be established. In external dosimetry the source of radiation is outside the body and the absorbed dose (or dose rate) depends on the distance from the source, time spent in the vicinity of the source, and influence of materials interposed between the source and the individual. These concepts are called simply time, distance, and shielding, but they play an important role in reducing personnel exposure to external sources of ionizing radiation.

Internal dosimetry is a process of measurement and calculation that results in an estimate of the absorbed dose (or dose equivalent) to tissues of the body from an intake of radioactive material. In this case, the radioactive material is assumed to be taken into the body whereupon it becomes subject to the control of normal body processes in terms of where it is deposited and the length of time the material remains in the body, for example. Absorbed dose estimates are based on measurements of radioactivity in material excreted from the body or on measurements by sensitive radiation detectors placed near the body that indicate the amount of radioactivity in the body. In either case, the dose estimate must rely on a mathematical model that has been derived to describe retention of the radioactive material in the body. The ability of this model to reflect the actual situation in any particular individual is always of concern in performing internal dose assessments.

I. SOURCES OF RADIATION

In this section, the term *radiation* is used to mean ionizing radiation. Only those radiations that can produce ionization in the atoms or molecules with which an interaction occurs are discussed in this section. Ionization is simply the process of removing (or adding) one or more electrons from (or to) an atom or a molecule. Therefore, ionizing radiation is usually considered to be any radiation that can displace an electron(s) from an atom or a molecule, thereby producing ions. The remaining atom (or molecule) and the liberated electron are called an ion pair; these play an important role in the detection of ionizing radiation.

Ionizing radiation is generally divided into two categories: directly ionizing radiation and indirectly ionizing radiation. The first category encompasses those radiations that possess an electrical charge and have sufficient kinetic energy to produce ionization by "collision." Actually, these radiations interact with the matter through which they are passing primarily by coulombic interactions; thus, the word *collision* can be misleading. Primary radiations that constitute this category are alpha particles, beta particles (both negatively and positively charged species), electrons and protons.

Indirectly ionizing radiations are those that have no charge and interact in a way that produces directly ionizing radiations. Some or all of the kinetic energy of the radiation is transferred by the interaction, and the directly ionizing radiations produced usually can cause additional ionization as this kinetic energy is dissipated in the medium. In this discussion, only two radiations are considered: photons (X-rays and gamma rays) and neutrons.

A. Types of Radiation

The discovery of X-rays, by Wilhelm Konrad Roentgen, and the discovery of natural radioactivity, by A. Henri Becquerel, occurred within a few months of each other. On November 8, 1895, Roentgen discovered X-rays, and translations of his work appeared in *Nature* on January 23, 1896. Becquerel noticed a fogging of photographic plates (similar to that reported by Roentgen) in his studies with uranium-based phosphorescent materials. Becquerel concluded that the fogging must be due to emissions from the uranium. Even though Becquerel continued his experiments for a number of years, his original observation (reported on February 24, 1896) formed the basis for the studies of many investigators. Thus, it is generally agreed that these two discoveries opened the door to the study of radiation and radioactivity (the term introduced by Marie and Pierre Curie).

A summary of the entire history of research into radiation and radiactivity is not presented here; instead, this very brief history sets the stage for the discussion of the characteristics of the types of radiations considered in this section. The information that follows was obtained over a number of years and encompasses the research of an

untold number of scientists throughout the world. The importance of this effort and its magnitude are often lost when simple, concise statements are made regarding the characteristics of ionizing radiations.

1. Alpha Particles

Radioactive decay (or transformation) of nuclei by the emission of alpha particles was determined by Ernest Rutherford in 1899. However, it was not until 1911 that Boltwood and Rutherford identified the properties of these radiations. These researchers concluded that an alpha particle is basically a helium nucleus consisting of two protons and two neutrons bound together in a stable configuration. This is a massive particle on a nuclear scale relative to the other radiations. Alpha particles, each with a mass of 4 units and a positive charge of 2, are emitted primarily in the radioactive transformation of heavy nuclei (e.g., uranium, thorium). These radiations are monoenergetic and usually possess a large amount of kinetic energy, typically in the range of 4–8 million electron volts (MeV). Because of their massive size and positive charge, alpha particles do not travel far in most media. The distance that alpha radiation travels in the air (i.e., the range) depends on the energy, but typical values range from 2.5 to 7.5 cm. In more dense materials (e.g., human tissue) the range of alpha particles is measured in micrometers.

2. Beta Particles

Radioactive decay by beta-particle emission confounded the scientific world for a number of years. In 1896, Becquerel noted the emission of energetic radiation from the salts of uranium that had penetrating powers similar to those of X-rays. In Rutherford's research on alpha particles, he also noted the emission of other radiations that had a penetration equal to the "average X-ray bulb." However, a full explanation of beta decay was not provided until the mid-1930s. In the early 1930s, Wolfgang Pauli postulated that the emission of beta radiation involved the release of not one but two radiations, one of which must be electrically neutral. This postulation allowed the conservation of energy and satisfied the accepted concept of discrete energy nuclear levels. Enrico Fermi proposed his theory of beta decay in 1934, in which he incorporated the postulates of Pauli. Fermi proposed that the radiation emitted along with the beta particle must have essentially no mass and no charge. He named this uncharged radiation the neutrino.

Radionuclides that have an excess of neutrons in the nucleus (neutron-rich) usually emit beta radiation when they transform. The beta particles emitted have all the characteristics of electrons. That is, each particle has a mass equivalent to an electron and a single negative charge. Some scientists call these radiations negatrons to distinguish the negative species from the positively charged species emitted in the decay of certain radionuclides. In contrast to alpha particles, beta particles do not have discrete energies. Instead, the energies are distributed in a continuum up to a maximum energy, which is equivalent to the total energy available in the transformation. The available energy is shared between the beta particle and the neutrino. However, in a discussion of dosimetry, it is common to characterize a certain beta-emitting radionuclide by the "average energy" of the beta particles. A rule of thumb is to assume that the average energy of a beta-emitter is one-third of the maximum energy.

Some radionuclides may be proton-rich (i.e., have an excess of protons in the nucleus) and will transform by the emission of a positively charged beta particle. These radiations are usually called positrons. Again, these radiations have the same mass as electrons and differ only in the fact that each possesses a single positive charge. When a positron comes to rest, it will combine with a free electron and "annihilate": the electron and positron combine, and their rest mass is converted into energy by the production of two photons (called annihilation radiation). These latter radiations are important in dosimetry and must not be ignored when an individual is dealing with positron-emitting radionuclides.

The penetrating power of beta particles, as indicated in early experiments, is much greater than that of alpha particles. Although it is not completely correct to speak of the "range" of beta particles, it is instructive to consider the range of this type of radiation in air. A rule of thumb in common use is that a 1-MeV beta particle has a range in air of $\sim$3.6 m.

3. Photons

In this section, the term *photons* is used to describe either X-rays or gamma rays. A photon has been described as a "bundle" or "particle" of radiation. This is because photons possess both particle- and wavelike properties; a photon possesses energy but it is assumed to have no mass. Both X-rays and gamma rays are electromagnetic radiation and differ only in their origin. X-rays originate from rearrangements in the electron structure of the atom. Gamma rays, however, originate from within the nucleus and are associated with the radioactive transformation of many radionuclides. In addition, gamma rays are usually assumed to have shorter wavelengths than X-rays have.

Photons can carry large amounts of energy and can have great penetrating powers. The degree of penetration is a function of the material; hence, dense materials such as lead are excellent shields against photon radiation.

4. Neutrons

Neutrons are relatively massive particles that are one of the primary constituents of the nucleus. However, neutrons can be produced in a number of ways and can represent a significant source of indirectly ionizing radiation. Generally, neutrons are segregated into several categories on the basis of their energy. Thermal neutrons are those that are in thermal equilibrium with matter and, in special cases, have a Maxwellian distribution of velocities. In this distribution, the most probable velocity at 295 K is 2200 m/sec, corresponding to an energy of 0.025 eV.

Neutrons in the energy range 0.5–10 keV are called intermediate neutrons. These neutrons may also be called resonance or epithermal neutrons. Fast neutrons are those in the energy range 10 keV to 10 MeV. In this energy range, neutrons interact with matter through elastic collisions (i.e., billiard-ball–type collisions). Neutrons with energies >10 MeV are called relativistic neutrons.

B. Natural Radioactivity

Every creature on earth is exposed continuously to ionizing radiation from natural sources. These sources can be divided into two basic categories: extraterrestrial and terrestrial. That is, some of the radiation originates from sources in space, whereas other radiation results from exposure to the naturally radioactive substances that constitute a portion of the earth's crust.

Extraterrestrial radiation sources can be further divided into two classes: cosmic radiation and cosmogenic radionuclides. The term *cosmic radiation* is used to mean both the primary energetic particles that interact in the earth's atmosphere and the secondary particles that result from these interactions. Primary cosmic radiation arises from two sources: galatic radiation, which is incident on our solar system, and solar radiation, which is emitted by our sun.

The components of galactic radiation are protons (87%), alpha particles (11%), and a few heavier nuclei and electrons. The energy of these radiations can exceed 10^{20} eV, but most of the radiation has energies in the range of 10^8 to 10^{11} eV. It is believed that these radiations originate from high-energy cosmic processes such as supernova explosions as well as other explosive phenomena. It is also believed that the higher energy radiations may actually originate outside our own galaxy.

The sun represents a continuous source of charged particles. However, these particles are of such a low energy level ($\sim$1 keV) that it is not possible for them to penetrate the earth's magnetic field and reach the atmosphere. Solar flares (large magnetic disturbances) can, however, generate large quantities of particles with energies approaching several GeV. Normally, these radiations are in the energy range of 1–100 MeV.

Primary galactic and solar radiations are attenuated by the earth's atmosphere and secondary radiations are produced. The first generation of secondary particles consists mainly of neutrons, protons, and pions. Decay of the pions results in the production of electrons, photons, and muons. It has been estimated that cosmic radiation contributes between 30 and 50% of the total dose from all external environmental radiation exposure.

Cosmogenic radionuclides are numerous although in most cases the atmospheric concentrations are quite small. Many of these radionuclides are produced by cosmic radiation interaction with extraterrestrial dust. Typical radionuclides include ^{7}Be, ^{22}Na, ^{26}Al, ^{60}Co, and many more. The major source of cosmogenic radionuclides is interactions with atmospheric gases. Primary radionuclides produced in these processes are ^{3}H and ^{14}C. Estimated equilibrium activities of these radionuclides are 28 million curies (MCi) for ^{3}H and 230 MCi for ^{14}C (with only $\sim$2% of this in the atmosphere). Because of previous nuclear weapons tests in the atmosphere, this equilibrium has been disturbed. As of 1963, an estimated 1900 MCi of ^{3}H had been injected into the atmosphere of the Northern Hemisphere. Weapons tests have increased the ^{14}C concentration to approximately twice the pre-1950 concentration.

Cosmogenic radionuclides may also be produced by interactions in the upper 1–2 m of the earth's crust. It is estimated that $\sim$70% of the earth's inventory of ^{36}Cl results from activation of ^{35}Cl, an abundant nuclide in rocks and seawater.

C. Nuclear Reactors

Nuclear reactors provide copious quantities of neutrons and gamma rays for many research applications. In addition, reactors provide many challenges from the dosimetry point of view. The leakage spectrum from a reactor may vary widely depending on the reactor type and its intended use, as well as the interposition of moderator, coolant, or shielding between the core of the reactor and the point of dosimetric interest. For example, the leakage spectrum from an unshielded fast reactor closely approximates that of the fission spectrum. Before definitive dosimetry measurements can be made in the mixed neutron- and gamma-radiation field present around a nuclear reactor, measurements must be made to difine as carefully as possible the radiation environment.

In addition, a reactor facility may pose other dosimetry problems caused by the activation of materials passing through the core (carried by the coolant) or by releases of fission products normally contained within the fuel itself.

Thus, in a reactor facility, there may exist a need to assess not only the neutron- and gamma-radiation environment, but also the radiation field produced by beta-emitting radionuclides at various locations throughout the facility.

D. Typical Radiation Environments

Recently, a significant effort has been devoted to characterizing radiation environments in and around nuclear power facilities and evaluating the response of personnel-monitoring devices and other radiation detectors in these radiation fields. The results of these studies have been published in a number of documents issued by the USNRC. This section summarizes the results of these studies, as the findings have a significant impact on dosimeter selection and the evaluation of the measured dose received by workers in these radiation fields.

1. Photon-Radiation Fields

Spectral and dosimetric measurements have been made in seven commercial nuclear power facilities in the United States. Both pressurized water reactors (PWRs) and boiling water reactors (BWRs) were included and surveys were made both while the reactors were operating and while they were shut down. Results of these studies showed that the photon-radiation fields in these facilities could be classified in four categories: (1) radiation fields dominated by photons emitted in the decay of radioactive materials associated with neutron-activated or fission-product deposits; (2) radiation fields dominated by scattered photons, represented as a continuum of energies; (3) radiation fields containing short-lived noble gases; and (4) radiation fields dominated by high-energy photons.

Each of these radiation fields is discussed briefly below. First, it is necessary to define the meanings of low-, medium-, and high-energy photons. For the purposes of this discussion, photons with energies <200 keV are referred to as low energy, medium-energy photons are those with energies in the range 200 keV to 3 MeV, and high-energy photons comprise all those with energies >3 MeV.

Dose rates in most areas of the nuclear plants were dominated by lightly shielded radioactive sources in neutron-activated or fission-product deposits. Measurements of photon spectra in various locations showed the expected radionuclides. These included the typical activation products ^{58}Co, ^{60}Co, ^{54}Mn, ^{51}Cr, ^{59}Fe, and ^{65}Zn. Primary fission products identified in the photon spectra included only ^{134}Cs, ^{137}Cs, and Zr-Nb-95. The average energy of the photon field strongly depends on the radionuclide mix. The photon field in some areas was found to be composed of only one or two radionuclides and the average energy was easily obtained from a knowledge of the decay schemes for the radionuclides. For example, one of the most prevalent radionuclides found through these measurements was ^{60}Co. In many cases this radionuclide was the only one present and, obviously, the average energy of the photon field was 1.25 MeV. In other cases, the average energy of the photon field may be low (200–300 keV) because of the complex mixture of radionuclides constituting the field.

The scattered photon field (a continuum of energies) varied with location in the facilities. The continuum usually had a maximum at $\sim$120 keV, with a half-maximum range from 70 to 250 keV. The distribution was skewed on the high-energy side with a high-energy "tail" exceeding 500 keV. However, the conclusion that this continuum is caused entirely by scattered photons can be misleading. As discussed above, for complex mixtures of activation and fission products, the average energy of the photon field also may fall into this energy range.

Radioactive noble gases were measured inside the containments at operating PWRs. The presence of photons with energies near or greater than 1 MeV obscured the effects of the low-energy photons from the xenon isotopes (i.e., 81 and 249 keV).

High-energy photons ($\leq$8 MeV) were measured inside the containments at operating PWRs. Even though these photons contributed significantly to the radiation field, the measurements also showed contributions from medium- and low-energy photons. In turbine rooms at BWRs, $\sim$80% of the dose was due to the high-energy photons from ^{16}N (6.1 MeV). Annihilation radiation (0.511 MeV) also contributed significantly to the total dose in the turbine areas.

The study concluded that the potential for inaccurate dosimetry results is greater for high-energy photon-radiation fields than for low-energy fields. It was estimated that some dosimeters may overrespond by as much as 60%. This overresponse occurs in film dosimeters and those that use filters manufactured from high–atomic-numbered materials and is due to differences in the pair production cross sections. However, as this study pointed out, the dose estimates obtained with these dosimeters are always conservative.

2. Neutron-Radiation Fields

A series of measurements of neutron energy spectra, neutron dose-equivalent rates, and personnel neutron-dosimeter responses also have been made at six commercial nuclear power plants. In this study, five of the plants were PWRs designed by the three reactor manufacturers. The sixth plant was an operating BWR. These measurements showed that most dose-producing neutrons had energies from 25 to 500 keV with an average between 50

and 100 keV in the containments of the PWRs. In general, spectral measurements revealed no significant numbers of neutrons with energies >1 MeV. At the BWR, measurements were resticted to the areas outside shield penetrations. In these areas, the neutron energy spectrum was somewhat more energetic with average energies from 150 to 250 keV.

Another set of measurements inside the containments of two PWRs operating at full power showed the neutron spectrum to be "soft" with few neutrons with energies >700 keV. In fact, in some locations, the average neutron energies were found to range from 0.9 to 90 keV. Thus, a dosimeter selected for use in nuclear power plant environments must be sensitive to neutrons with energies in the intermediate energy range or on the lower end of the fast-neutron energy range (typically fast neutrons are assumed to have energies from 10 keV to 10 MeV). This requirement limits the choice of dosimeters because some of the more conventional dosimeters (e.g., film badges) do not respond to neutrons in this energy range. The response of dosimeters to neutron radiation is discussed in Section IV.A.6.

3. Beta-Radiation Fields

Beta-radiation fields in and around a commercial nuclear power facility are extremely difficult to characterize. In actual plant situations, the mixture of beta-emitting radionuclides and the ratio of beta- to gamma-radiation intensity may change with time. In general, many of the radionuclides just discussed contribute significantly to the beta-radiation field in the nuclear power environment. However, the components of the radiation field at any time depend on the operating history of the plant, integrity of the fuel cladding, quality of the reactor coolant chemistry, and status of the plant (operating or shut down), Measurements in selected areas in a PWR showed a wide variation in the average beta energy. For example, at the steam generator manway and diaphragm, the average energy was 76 keV, whereas measurements in the reactor coolant system (gas) area showed an average energy of 561 KeV. In general, the average beta energy in the 12 reactor areas surveyed ranged from 100 to 300 KeV. Data obtained at a BWR, from area smears and analysis of resin samples, gave an average beta energy of ~240 keV.

E. Accelerators

Accelerator-produced radiations are also of dosimetric concern although most accelerators are heavily shielded and personnel are not normally exposed to these radiations. However, accelerators are used as sources of neutrons and other radiations in dosimetry research. The use of a Van de Graaff accelerator allows the production of monoengergetic neutrons over a wide range of energies. Such monoenergetic sources are used for the calibration and intercomparison of neutron dosimetry systems. Linear accelerators are also used with the most common reactions being the $D(d,n)^3$He reaction that produces 3-MeV neutrons and the $T(d,n)^4$He reaction that produces 14.3-MeV neutrons.

Accelerators are also used extensively in radiation therapy, and careful dosimetry is a requirement for effective treatment of disease. In this application, Van de Graaff generators, linear accelerators, and betatrons have been used. Dosimetry for purposes of radiation therapy (including treatment planning) is not discussed here.

F. Isotopic Sources

A large number of isotopic radiation sources are available for use in the calibration of dosimeters. This section describes typical sources used in dosimetry.

1. Beta-Radiation Sources

The number of beta-radiation sources available for dosimeter calibration is limited. Few of the radionuclides that decay by beta emission are actually "pure" beta-emitters; that is,the radionuclide emits only beta radiation in the process of transforming. In addition, only a very few of these pure beta-emitters have radioactive half-lives that are sufficiently long to make them suitable for use in dosimeter calibration. These radionuclides, and some general characteristics of each, are listed in Table I.

2. Gamma-Radiation Sources

Many more radionuclides that also emit gamma radiation in their decay are available and many have very long half-lives. Two of the most widely used radionuclides are ^{60}Co (with a half-life of 5.27 yr) and ^{137}Cs (with a half-life of 30.0 yr). Both these radionuclides decay by beta emissions. In the case of ^{60}Co two high-energy gamma rays

TABLE I Comparison of Some Common Beta Sources

Radionuclide	Half-life	Average energy (MeV)	Maximum energy (MeV)
^{147}Pm	2.6 yr	0.062	0.225
^{204}Tl	3.8 yr	0.267	0.765
^{90}Sr	29.12 yr	0.200	0.544
^{32}P	14.3 d	0.694	1.709
^{90}Y	64.0 hr	0.931	2.245

TABLE II Comparison of Some Common Gamma Sources

Radionuclide	Half-life	Energy (MeV)	Specific gamma-ray ray constant (R-cm^2/hr-mCi)
^{60}Co	5.27 yr	1.17, 1.33	13.2
^{137}Cs	30.0 yr	0.661 (^{137m}Ba)	3.3
^{24}Na	15.0 hr	1.37, 2.75	18.4
^{54}Mn	303.0 d	0.835	4.7
^{22}Na	2.6 yr	1.275	12.0

are emitted in cascade in >99% of the transitions. The radionuclide ^{137}Cs is actually a pure beta-emitter and the gamma ray associated with the decay of this radionuclide is actually due to the decay of ^{137m}Ba (2.55 min). Characteristics of selected gamma-radiation sources are presented in Table II.

3. Neutron Sources

Isotopic neutron sources have been available for a long time. Much of the early research that led to the discovery of fission and the possibility of producing a slef-sustaining nuclear chain reaction used such isotopic sources. In general, most isotopic sources rely on a radionuclide that emits either alpha radiation or gamma radiation in combination with beryllium. Irradiation of beryllium with alpha particles results in complex nuclei formed by absorption of the alpha particles by ^{9}Be nuclei. These complex nuclei are highly excited and a neutron is emitted almost instantaneously (within approximately one billionth of a second). Characteristics of these sources, called (α, n) sources are presented in Table III. Neutrons emitted by these sources span a wide range of energies, yet it is common to assign some average energy to the neutrons emitted from a particular source. However, this point should not be ignored when an individual is calibrating neutron dosimeters.

Neutrons can also be produced when gamma rays interact in beryllium. These sources, often called photoneutron sources, require reasonably high-energy gamma radiation and are characterized by low neutron yields. In addition, with the exception of ^{226}Ra, the gamma-radiation sources used for photoneutron sources have short half-lives. Characteristics of selected sources are given in Table IV.

TABLE III Comparison of Some (α, n) Neutron Sources

Source	Half-life	Average E_n (MeV)	Maximum E_n (MeV)	Output for 1 Ci (neutrons/sec)
^{210}Po-B	138.4 d	2.8	5.0	2.0×10^5
^{210}Po-Be	138.4 d	4.0	10.8	2.5×10^6
^{241}Am-Be	458.0 yr	4.3	11.0	2.0×10^6
^{226}Ra-Be	1622.0 yr	4.5	13.2	1.5×10^7
^{239}Pu-Be	2.44×10^4 yr	4.1	10.6	1.5×10^6

The availability of spontaneously fissioning radionuclides has had a strong influence on neutron dosimety since the early 1970s. Approximately 30 radionuclides decay by spontaneous fission, usually in competition with alpha decay. It is now possible to produce sufficient quantities of these radionuclides so that the sources are useful in the calibration of dosimeters. These sources have neutron- and gamma-ray energy spectra that are basically equivalent to the fission spectra and are extremely useful for calibration of dosimeters to be used in mixed-field dosimetry around certain types of nuclear reactors. In addition, moderators have been designed to enclose these sources, making them suitable for standardization of many types of dosimeters. A summary of some of the pertinent characteristics is given in Table V.

II. QUANTITIES AND UNITS

A. Basic Definitions

Measurements with radiation dosimeters may yield results in a number of different units. These include count rate, exposure rate, absorbed-dose rate, and dose-equivalent rate to name only a few. Each of these units may or may not be appropriate for the particular instrument and the measurement being made. However, it is extremely important that the user understand the meaning of these results and the fundamental quantities that are represented by these data. For this reason, the fundamental definitions of the appropriate quantities and their associated units are presented before a detailed discussion of radiation dosimetry systems.

Even though the International Commission on Radiation Units and Measurements (ICRU) has issued new definitions for many of the dosimetric concepts, the United States has been slow to adopt these new concepts. Thus, the definitions that follow reflect those still in common use. When possible, the SI unit has been included along with the traditional unit.

1. Activity

The activity A of an amount of radioactive nuclide in a particular energy state at a given time is the quotient of dN by dt, where dN is the expectation value of the number of spontaneous nuclear transitions from that energy state in the time interval dt. That is,

$$A = dN/dt.$$

TABLE IV Comparison of Some (γ, n) Neutron Sources

Source	Half-life	E_γ (MeV)	Energy calculated (MeV)	Energy measured (MeV)	Yield
$^{24}Na + Be$	15.0 hr	2.757	0.966	0.83	1.3×10^5
$^{24}Na + D_2O$	15.0 hr	2.757	0.261	0.22	2.7×10^5
$^{88}Y + Be$	104.0 d	1.853	0.166	0.158	1.0×10^5
$^{124}Sb + Be$	60.0 d	1.70	0.031	0.0248	1.9×10^5
$^{226}Ra + Be$	1622.0 yr	Many	—	0.7 max	1.2×10^4
$^{226}Ra + Be$	1622.0 yr	Many	—	0.12	0.1×10^4

The traditional unit of activity is the curie with 1 Ci = 3.7 E10/sec. The Sl unit for activity is the becquerel and 1 Bq = 1/sec; therefore, a Ci = 3.7 E10 Bq. In the above definition, the "particular energy state" is the ground state of the nuclide unless otherwise specified. The activity of an amount of a radionuclide is equal to the product of the decay constant and the number of nuclei in that particular state.

2. Exposure

The exposure X is the quotient of dQ by dm. where dQ is the absolute value of the total charge of the ions of one sign produced in air when all electrons liberated by photons in a volume element of air having a mass dm are completly stopped in air; that is,

$$X = dQ/dm.$$

This definition indicates that exposure may be measured by collecting the charge produced in a known volume (mass) of air produced by the interaction of photons in the air.

The special unit of exposure is the roentgen, named after the discoverer of X-rays. One roentgen is equivalent to 2.58×10^{-4} C/kg. Under the SI units, the roentgen will no longer be used and exposure will simply be measured in units of C/kg (charge produced per unit mass).

TABLE V Comparison of Some Spontaneous Fission Sources

Nuclide	Half-life, spontaneous fission (Yr)	Half-life (α-decay)	Neutrons/g-sec
^{236}Pu	3.5×10^9	2.7 yr	3.1×10^4
^{238}Pu	4.9×10^{10}	89.6 yr	2.3×10^3
^{240}Pu	1.3×10^{11}	6600.0 yr	7.0×10^2
^{242}Cm	7.2×10^6	162.5 d	1.8×10^9
^{244}Cm	1.4×10^7	18.4 yr	1.0×10^7
^{252}Cf	85.5	2.7 yr	2.3×10^{12}

This definition is very restrictive in that it applies only to photons (i.e., X-rays and gamma rays) interacting in air; exposure to other radiations should not be expressed in units of exposure. In addition, radiation energy interacting with other types of matter (e.g., tissue) cannot be expressed in units of exposure. An additional factor often forgotten is that the quantity exposure is not defined for photons with energies >3 MeV. Nevertheless, this quantity is still widely used in radiation protection, and most pocket dosimeters (direct and indirect reading) "read out" in units of exposure, as do many portable, air-filled ionization chamber survey instruments (more correctly, exposure rate). With the introduction of SI units, some pocket ionization chamber manufacturers supply their dosimeters with an internal scale that is read directly in units of coulombs per kilogram. At the present time, these direct-reading dosimeters are not sold in the United States.

A More useful quantity is specified in the definition of the absorbed dose. Absorbed dose D is the quotient of $d\varepsilon$ by dm, where $d\varepsilon$ is the mean energy imparted by ionizing radiation to matter in a volume element and dm is the mass of the matter in that volume element. Mathematically,

$$D = d\varepsilon/dm.$$

This fundamental definition simply states that absorbed dose is the energy absorbed per unit mass of the material being irradiated. the special unit of absorbed dose is the rad and 1 rad = 0.01 J/kg. The newer SI unit for absorbed dose is the gray and 1 Gy = 1 J/kg. In other words, 1 Gy = 100 rad.

In occupational radiation protection the quantity of interest is the *dose equivalaent*. The dose equivalent H is the product of the absorbed dose, the quality factor, and any other modifying factors that may be appropriate for the exposure situation. that is,

$$H = D \times Q \times N.$$

In this equation, D represents the absorbed dose from the equation above, Q the quality factor, and N the product of all modifying factors. For external exposure situations,

N is always assumed to be equal to 1. (More recently, the ICRU has decided to drop the factor N because there have been no cases in which it has been assigned a value other than unity.) Values of the quality factor depend on the type of radiation and the linear energy transfer (LET) of the radiation. However, for radiation protection purposes, it is usually assumed that the values of Q are constants for particular types or radiation. The currently accepted values are

- $Q = 1$ for electrons, beta radiation, X-rays, gamma radiation, and bremsstrahlung.
- $Q = 20$ for alpha particles, fission fragments, and recoil nuclei, although none of these pose an external radiation hazard.
- $Q = 3$ for thermal and intermediate neutrons (energies <10 keV).
- $Q = 10$ for fast neutrons (energies >10 keV) and protons, although the International Commission on Radiological Protection (ICRP) has recently recommended that Q be increased to 20 for fast neutrons. This change has not been widely incorporated into national recommendations on radiation protection, nor has it been implemented in federal regulations.

It should be noted that neutron flux dose-equivalent data presented in tabular form in Title 10 Code of Federal Regulations Part 20.4, "Units of Radiation Dose," can be used to derive a quality factor as a function of neutron energy.

The traditional unit for dose equivalent is the rem. Under the traditional definition of the dose equivalent, the unit rem has no cgs (centimeter-gram-second) or mks (meter-kilogram-second) equivalent. Reserving a special unit for use with the quantity dose equivalent and associating no other conventional units with it was a way of indicating that the dose equivalent was the product of a physical quantity (absorbed dose), an empirical factor applied to account for the differences in biological response for equal absorbed doses from different radiations (quality factor), and a factor that took into account any other effects that might be noted for particular exposure situations (other modifying factors).

More recently, the ICRP has chosen to replace the term *quality factor, Q* with the term *radiation weighting factor*, w_R. However, for the purposes of this discussion, the quality factor and the radiation weighting factor are conceptually equivalent.

The SI unit for the dose equivalent is called the sievert, where 1 Sv = 1 J/kg and, therefore, 1 Sv = 100 rem. In this case, the ICRU decided that the quality factor and the distribution factor were dimensionless and, therefore, it was clear that both the absorbed dose and the dose equivalent must have the same units in the SI system. Assigning the sievert the identical units as the gray has caused a great deal of confusion and discussion in the radiation protection community. However, this need not cause trouble at this point because the SI units have not yet been adopted for use in radiation protection purposes in the United States.

3. Kerma

The kerma K is the quotient of $dE(tr)$ by dm, where $dE(tr)$ is the sum of the initial kinetic energies of all charged ionizing particles liberated by uncharged ionizing particles in a material of mass dm. That is,

$$K = dE(tr)/dm.$$

The traditional unit for the absorbed dose (i.e., rad) may also be used as the unit for kerma. However, the SI unit for kerma is the gray. The extent to which absorbed dose and kerma are equal depends on the degree of charged particle equilibrium and bremsstrahlung is negligible.

4. Linear Energy Transfer

The linear energy transfer L of a material for charged particles is the quotient of dE by dl, where dE is the energy lost by a charged particle traversing a distance dl; that is,

$$L = dE/dl.$$

Many scientists use the notation LET to represent the linear energy transfer. In conventional units, L is usually expressed in keV/μm (i.e., kiloelectron volts per micrometer); however, the SI unit is joules per meter.

B. The Bragg-Gray Principle

Measurements of absorbed dose due to the interactions of ionizing radiation in matter rest on the Bragg-Gray principle, a fundamental concept in dosimetry. This principle states that the energy absorbed from secondary electrons per unit volume of a solid medium is equal to the product of the ionization per unit volume in a small gas-filled cavity in the medium, the mean energy expended in the gas, and the ratio of the mass stopping powers of the secondary electrons in the medium and the gas. Stated more simply, the principle indicates that the amount of ionization produced in a gas-filled cavity serves as a measure of the energy deposited in the surrounding medium.

For this statement to be true, several conditions must be met. These include

1. The cavity must be of such dimensions that only a small fraction of the particle energy is dissipated in it. This

condition means that only a small fraction of the particles contributing to the ionization will enter the cavity with a range that is less than the cavity dimensions.

2. Radiation interactions in the gas in the cavity should contribute only a negligible proportion of the total ionization in the cavity. This condition is usually satisfied if the first condition is met.

3. The cavity must be surrounded with an equilibrium thickness of the solid medium. This is the thickness that will result in electronic equilibrium. Electronic equilibrium is a situation that exists when electrons (produced by radiation interacting in a volume) escape from the volume but are replaced by electrons produced outside the volume that enter the volume and dissipate a portion of their energy. In other words, this equilibrium thickness is the thickness of material equal to the range of the most energetic secondary electrons produced by the primary radiation.

4. Energy deposition by the ionizing radiation must be essentially uniform throughout the solid medium immediately surrounding the cavity.

If these conditions are met, the energy absorbed per gram of the solid material is related to the ionization per gram of the gas in the cavity by

$$E_m = J_g \times W \times s_m,$$

where

J_g = the number of ion pairs formed per unit mass of the gas (usually expressed in units of grams).
W = the average energy required to produce an ion pair.
s_m = the ratio of the mass stopping power of the medium to that of the gas in the cavity for the secondary electrons.

The value of W in air for X or gamma radiation is ~34 eV per ion pair. The factor s_m can be expressed as

$$s_m = \frac{[N_m \times S_m]}{[N_g \times S_g]},$$

where

N_m = the number of electrons per gram of the medium.
N_g = the number of electrons per gram of the gas.
S_m = the stopping power (for electrons) for the medium.
S_g = the stopping power (for electrons) for the gas.

Basically, the factor s_m indicates how much more frequently ionization will occur in the medium than in the gas in the cavity. Thus, measurement of J_g, the ionization per unit mass of the gas in the cavity, coupled with a knowledge of the values of s_m and W, makes it possible to determine the absorbed energy (absorbed dose) in the medium. If the medium is tissue, then the Bragg-Gray principle allows the measurement of the absorbed dose to the irradiated tissue.

III. INTERACTIONS OF RADIATION WITH MATTER

A. Alpha Radiation

As charged particles, such as alpha particles, move through material, energy is transferred from the radiation to the atoms or molecules that make up the material. The major energy-loss mechanisms are electronic excitation and ionization. The alpha particle has a high electrical charge but a low velocity due to its large mass, and interactions are frequent. These interactions are with the loosely bound, outer electrons of the atoms in the material and should not be considered collisions. Since the particle is positively charged, it exerts an attractive force on the oppositively charged electron. In some cases, this force is not sufficient to separate the electron from the atom, but the electron is raised to a higher energy state and the atom is said to be "excited." In other cases, the attractive force is sufficient to remove the electron from the atom (ionization). The closer an alpha particle passes near an electron the stronger the force and the higher the probability an ionizing event will occur. In these situations, the electron may be imagined as being "ripped" from its orbit as the alpha particle passes nearby.

The number of ion pairs created per unit length of travel is called the specific ionization. The specific ionization of alpha particles is, of course, dependent on the energy of the radiation. Only ~34 eV of energy is required to produce an ionizing event in a gas such as air. It should be clear then that a typical alpha particle, with perhaps 5 MeV of energy, will cause a large amount of ionization and it is safe to say that alpha particles have a high specific ionization. In air, the specific ionization may be ~10,000 ion pairs per centimeter or more. As the alpha particle gives up its energy, it slows and therefore spends more time in the vicinity of atoms. For this reason, the specific ionization increases near the end of the alpha particle's travel. Near the very end of the travel, the specific ionization decreases to zero as the particle acquires two electrons and becomes a neutral atom.

Alpha particles can be characterized as having straight paths and discrete ranges. In describing the movement of alpha particles through matter, the term *mean range* is

used. The mean range is the absorber thickness traversed by an "average" alpha particle. Empirical equations have been derived that can be used to calculate the range of alpha particles in materials. Usually, the range is specified in air and, if necessary, this range is used to convert to a range in any other material. For alpha particles in the energy range 4–8 MeV one such equation is

$$R_{\text{cm}} = 1.24E_{\text{MeV}} - 2.62,$$

where

R = the range in air in centimeters.
E = the energy of the alpha particle in million electron volts.

The range in tissue is obtained by using the equation

$$R_{\text{air}} \times \rho_{\text{air}} = R_{\text{tissue}} \times \rho_{\text{tissue}},$$

where

ρ = the density of the materials.
R = the range in centimeters.

Since the density of tissue is assumed to be 1 g/cm^3 the equation reduces to

$$R_{\text{tissue}} = R_{\text{air}} \times \rho_{\text{air}}.$$

B. Beta Radiation

As mentioned above, beta particles have the same mass as electrons and may differ only in the charge on the particle (i.e., positron). These radiations also interact with the matter through which they are passing by means of excitation and ionization. However, in the case of electrons and beta particles (i.e., the negatively charged species), the interaction processes involve scattering (i.e., inelastic collisions) rather than attraction. Since the particles have like charges to those of the orbital electrons, there is a repulsive force exerted between the two. The net effect is the same, however, because electrons may be moved to higher energy states or sufficient force may be exerted to ionize the atom. Positron interactions are also considered to be scattering reactions even though the radiation is positively charged.

In contrast to alpha particles, as beta particles move through material, many scattering events occur and the path is far from straight. Some researchers have described this path as "tortuous," resulting from multiple scattering events with atoms along the particle's path. Two terms are used to describe electron absorption in material. The *range* of a beta particle is the linear thickness of a material required to absorb the particle. The *path length* is the actual distance traveled before all the particle's kinetic energy is lost. It should be clear that the path length is much greater than the range.

Beta particles may also lose energy by radiative collisions or bremsstrahlung production. The word *bremsstrahlung* means "braking radiation," and it is the term used to describe energy that is radiated when the beta particle (electron) is accelerated due to the presence of the nucleus. Bremsstrahlung is usually important only at high energy and in high–atomic-numbered absorbers.

Range energy relations have also been derived for beta particles. One such equation is

$$R = 0.542E - 0.133 \quad \text{for} \quad E > 0.8 \text{ MeV}.$$

In this equation, E has units of MeV and the range (R) is given in units of g/cm^2 (grams per square centimeter).

Beta particles that have lost their kinetic energy can exist in nature as electrons. However, this is not true for positrons. When a positron comes to rest, it combines with a free electron and annihilates. That is, the electron and the positron neutralize each other and convert their combined rest mass into energy. This rest mass is released in the form of two photons, each with 0.511 MeV of energy. The production of these energetic photons must be considered when an individual is performing dosimetry or designing shielding to protect against positron radiation.

C. X and Gamma Radiation

Photons interact with matter through three primary mechanisms: the photoelectric effect, Compton scattering, and pair production. The probability of each of these interactions occurring depends on the energy of the radiation and the material through which it is passing.

The photoelectric effect occurs primarily at low photon energies and in high–atomic-number (Z) materials. This interaction should be considered to occur with the entire atom even though the energy transfer is between the photon and an orbital electron. In this interaction a photon strikes a tightly bound electron and transfers its entire energy to the electron. If this energy is greater than the binding-energy of the electron to the atom, then the electron will be knocked out of the atom. The electron (a photoelectron) may possess kinetic energy as a result of this interaction. This energy is the difference between the initial energy of the photon and the binding energy of the electron.

Photoelectric interactions are most probable with the most tightly bound electrons (K shell), and the loss of an electron from the inner shell(s) leaves a vacancy that must be filled. An electron from a higher orbit will drop into the vacancy, but it in turn leaves another vacancy. There is in effect a cascading of electrons as they drop into lower energy states to fill the existing vacancies. As each electron

fills a vacancy, a photon is emitted whose energy is equal to the difference between the initial and final energy levels. These photons are called characteristic X-rays because the energy differences between the electron orbits are unique for an atom and the photons are characteristic of the element from which they originate.

As stated previously, photoelectric interactions are most probable at low photon energies. The interaction is relatively unimportant for photons with energies >1 MeV, except in very heavy elements.

Compton scattering is an interaction that occurs between a photon and an essentially "free" electron. That is, the electron is in one of the outer orbits and its binding energy is significantly less than the energy of the photon. In Compton scattering, the requirements for the conservation of momentum and energy make it impossible for complete transfer of the photon energy to the electron. Basically, the photon has a collision with the electron and transfers only a portion of its energy to the electron. The photon is deflected from its original path (scattered) and has less energy (longer wavelength) than the incident photon. The Compton electron has kinetic energy equivalent to the difference between the initial photon and the Compton-scattered photon.

The probability of Compton scattering decreases with increasing photon energy and with increasing Z of the absorber. This interaction is, therefore, more probable in the middle photon energy range (i.e., 0.1–1 MeV) and with light materials.

The third interaction, pair production, may be considered the opposite of the production of annihilation radiation. In this case, a high-energy photon comes into the near vicinity of the nucleus of an atom and has a coulombic interaction in which the photon disappears and two charged particles are produced in its place. These charged particles, a positron and an electron, share (as kinetic energy) any available energy of the photon over and above the threshold energy for the reaction. The rest-mass energy of each of these charged particles is equivalent to 0.511 MeV and, therefore, pair production is not possible below a "threshold" of 1.022 MeV. Even though the threshold for this reaction is just >1 MeV, pair production does not become important until a photon energy of ~4 MeV is reached.

When the positron has expended its kinetic energy in the medium, it will annihilate with a free electron, as described previously.

D. Neutrons

The type of neutron interaction depends strongly on the kinetic energy of the neutron. For thermal neutrons, the most important interaction with matter is capture. That is, the neutron is captured by the nucleus and the nuclear structure is transformed. In most situations, this transformation results in an unstable nucleus and energy is emitted by the nucleus as radiation. For example, in tissue the important reaction at low energy is the neutron–gamma reaction with hydrogen. This reaction produces a gamma ray with 2.2 MeV of energy. Another reaction in tissue is the neutron–proton reaction with nitrogen producing a 0.6-MeV proton. Both these reactions are of concern in dosimetry.

For intermediate-energy neutrons, the neutron slowing-down process is the important interaction with matter. Capture and nuclear reactions may also occur in this region.

In dosimetry, fast neutron interactions are the most important, especially those occurring in tissue. The most important dose-depositing interaction of fast neutrons with tissue is elastic scattering with hydrogen. Collision of a neutron with a nucleus results in deflection of the incident particle, along with the transfer of a portion of the neutron energy to the struck nucleus. Energy losses by elastic scattering depend on the size of the colliding nucleus and the collision angle (glancing or head-on).

Inelastic scattering becomes important as the neutron energy increases, first occurring for most nuclei at an energy of ~1 MeV. At energies >10 MeV, inelastic scattering may be as probable as elastic scattering. The most important inelastic reactions in soft tissue are those with nuclei of carbon, nitrogen, and oxygen.

Cross sections for inelastic processes of interest in tissue become significant at >5 MeV and increase generally, but not always, monotonically with neutron energy to ~15 MeV. Most of these reactions are accompanied by deexcitation gamma rays, but proton- and alpha-producing reactions are of special importance because of the higher LET of the particles and the total absorption of the particle energy very near the reaction site.

In the relativistic energy range, especially >20 MeV, inelastic scattering is more important than elastic scattering. For high–atomic-number materials, the elastic cross section may be neglected entirely. However, for hydrogenous materials, such as tissue, elastic processes are still important.

IV. DOSIMETRIC TECHNIQUES, EXTERNAL

The basic requirement of any dosimetric device is that it measure (register) the dose received with sufficient reproducibility and reasonable accuracy over the entire range of energies, doses, and dose rates expected during its use. The dosimeter may be a standard device used to establish or characterize a particular radiation field or it may be

a monitoring device worn by radiation workers to establish their occupationally related dose. The accuracy of a dosimetry system may vary depending on the intent of the dosimetry and the dose levels to which the dosimeter is exposed. National and international guidance on personnel monitoring indicate that an accuracy of ±50% is acceptable for those exposures classed as "routine occupational exposure." This term refers to the exposure that radiation workers receive during normal work activities; the term is also used to describe exposures that are well below any legal limit. As exposure levels increase, the desired accuracy of a personnel monitoring system becomes more restrictive. Both the National Council on Radiation Protection and Measurements (NCRP) and the International Commission on Radiological Protection (ICRP) recommend that for exposures approaching the permissible levels the accuracy be approximately ±30%. The International Atomic Energy Agency (IAEA), in its latest Code of Good Practice on personnel monitoring, recommends even more accuracy. For doses approaching those that could have clinical significance, the IAEA document recommends a desired accuracy of ±25%. The term *clinical significance* includes those exposures that may be life-threatening; however, it is important to note that the level of interest extends down to acute exposures in excess of ∼1 rad.

In other situations, the requirements on the accuracy of the dosimetry may be much more severe. For example, in dosimetry for radiation-therapy treatment planning a much higher degree of accuracy (perhaps a few percent) is required because of the potential for severe harm if overexposure occurs. A clear understanding of the requirements and the ability of a particular dosimetry system to meet these requirements is an important facet of "good dosimetry."

Individuals responsible for a dosimetry program regardless of its intent must understand the performance characteristics and limitations of the particular dosimetry system in use at their facility. It should be understood that quantitative measurements made with the system depend on many factors. These include

1. Variation of the dosimeter response from the ideal. Factors such as radiation quality (LET), radiation intensity, energy dependence, and angular dependence may influence the indicated dose.
2. Reliability with which the dosimeter maintains its calibration or retains the recorded dose. Terms such as *fading* or *leakage* are normally used to describe the loss of information originally recorded by the dosimeter.
3. Influence of environmental factors. Temperature, humidity, dust, vapors, light, and many other factors may affect the dosimeter response or the ability of the dosimeter to retain the recorded dose information. In addition, other factors, such as rough treatment or contamination, may lead to invalid monitoring results.

The adequacy of a personnel monitoring system cannot be fully evaluated unless some consideration is given to these factors.

To evaluate fully any dosimetry system, an individual must also understand the desired characteristics of an "ideal" system. A list of these characteristics would include

1. Adequate sensitivity over the anticipated exposure range.
2. Adequate reproducibility.
3. Stability before, during, and after exposure. There should be a minimum loss of information before use, during the measurement period, and during any waiting period between collection and evaluation of the dosimeters.
4. An energy-independent response.
5. A linear relation between response and dose. This characteristic is not completely necessary as long as the relationship is well-known and unambiguous.
6. LET-independent response.
7. A response independent of dose rate.
8. Minimum sensitivity to environmental factors.
9. A response independent of the angle of incidence of the radiation.
10. No response to unwanted radiations. The dosimeter should record the dose due to all types of radiation equally well, or it should be sensitive to only one type of radiation.
11. If the dosimeter is a personnel monitoring device, no interference with the worker's ability to perform their routine tasks. Primary considerations here are the size and weight of the dosimeter.
12. Easy identification to facilitate issue, collection, and proper assignment of the recorded doses.

No dosimetry system (especially a personnel monitoring system) is capable of meeting all the ideal characteristics just listed. However, a knowledge of the strengths and weaknesses of available systems can do much to ensure the proper use and interpretation of these dosimeters. The desired characteristics should be kept in mind as the available personnel monitoring systems are discussed.

A. Gas-Filled Detectors

Gas-filled detectors represent probably the most widely used class of radiation detectors. All detectors in this class are based on the collection of ions produced in the sensitive volume of the detector due to the passage of ionizing radiation. Ionization chambers, proportional counters, and Geiger-Müller counters are the primary detectors in this

class. However, ionization is also important in a number of other detector systems.

The popularity of gas-filled detectors stems from a number of important factors. The detectors are relatively simple to construct, are easy to operate, and require only a minimum of equipment. This is especially true for some types of ionization chambers. A large number of gases, even air, may be used to fill the detectors. Finally, detectors in this class may be constructed in a variety of shapes and sizes to fit virtually any application and to provide a wide range of sensitivities. Most of these detectors are available commercially.

1. General Considerations

Radiation interacting in a gas-filled volume produces ion pairs in the volume through the process called ionization. Excitation of the molecules also occurs. The ion pairs (electrons and positive ions) are the result of interactions of the incident radiation with orbital electrons of the gas molecules.

The incident radiation may have a majority of its interactions in the gas or in the material making up the wall of the detector. Directly ionizing particles in the gas-filled region result from some combination of these interactions. This depends on the type and energy of the radiations being detected. Alpha particles may not have sufficient energy to enter the sensitive volume of the detector unless the walls of the detector are very thin and, therefore, ionization is produced directly in the gas. Beta radiation is much more penetrating, and there is a higher probability that the particles can enter the detector volume. Both of these radiations are classed as directly ionizing radiations and have the ability to cause ionization in the gas volume.

Gamma radiation and neutrons are common examples of indirectly ionizing radiations. These radiations interact with molecules of the gas or those composing the chamber wall, producing charged particles that result in ionization and excitation of the gas. In gas-filled detectors, gamma-ray interactions occur with a much higher probability in the dense wall of the detector than in the less dense, gas-filled volume. Thus, the primary source of charged particles in the gas-filled volume due to gamma-ray interactions are electrons released from (or knocked out of) the wall by these interactions.

Neutrons may be detected by supplying the radiation detector with a material that has a high–neutron-absorption cross section. In this case, the neutron interaction produces an excited nucleus, which emits a charged particle that ionizes the gas. This technique, as well as others, is discussed in more detail later in this section.

Charged-particle interactions in the gas produce a region around the particle track in which the ion pairs exist. The ion pair density depends on the specific ionization of the particle. For a heavily charged particle (e.g., an alpha particle), the track is very straight and the density of ion pairs along the track is quite high. The specific ionization of an alpha particle may exceed 10,000 ion pairs per centimeter. Electron tracks are not straight because of the large number of scattering interactions these particles may experience. In addition, the specific ionization is much less (perhaps 100 ion pairs per centimeter) and thus the ion-pair density is less than that for alpha particles or protons.

Electrons produced in ionizing events may make many collisions with the gas molecules as they move through the detector volume. For most common gases the mean free path (i.e., the average distance between collisions) is in the range of 10^{-4} to 10^{-5} cm. Often, electron collisions with gas molecules result in electron attachment to the molecule, which forms a negative ion. The probability of attachment to a neutral molecule per electron collision is called the electron attachment coefficient. The value of the coefficient depends on the electron energy and the type of gas. Values range from 10^{-6} for gases such as argon to 10^{-3} for the halogen gases. The best gases for use in radiation detectors are those that have a low electron attachment coefficient.

Since the positive and negative ions and electrons exist in proximity to each other, recombination may be a common occurrence; that is, the ions simply recombine to form neutral molecules. Of course, the number of recombinations is proportional to the density of positive and negative charges present. Therefore, the potential for recombination along the track of an alpha particle is much higher than that along a beta-particle or electron track. If no electric field is present in the detector, then the above effects predominate and tend to erase the effects of the ionizing radiation.

2. Ionization Chamber Regime

Consider a radiation detector shown schematically in Fig. 1. The diagram shows a gas-filled volume with a central electrode insulated from the outer walls of the chamber. A voltage is applied, through a resistor shunted by a capacitor, between the outer wall and the central electrode.

Ionizing radiation passing through the sensitive volume of the detector will produce ion pairs within the volume due to interactions either in the walls or in the gas-filling. The positive and negative charges, under the influence of the applied electric field, will move toward their respective electrodes. The number of ion pairs reaching the collecting electrodes depends on the chamber design, gas-filling, and applied voltage. A typical plot of the relationship between the number of ion pairs collected and the applied voltage is shown in Fig. 2.

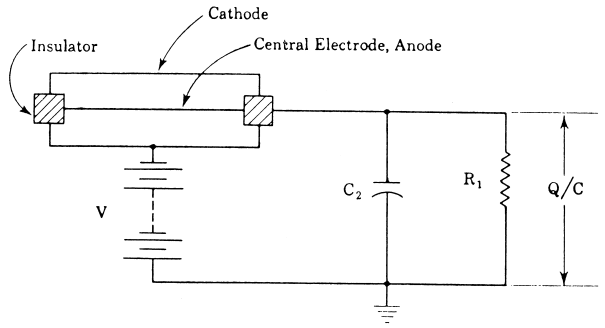

FIGURE 1 Diagram of a gas-filled detector.

In this figure there are four very different regions. In region I, at low applied voltages, several mechanisms are active and compete for the ion pairs produced. The primary factors are a loss of ion pairs due to recombination and the removal of the charges from the volume by the collecting electrodes. At low voltages there is a net drift of the charges in a direction parallel to field lines of force. The drift velocity is a complex relation dependent on the type of gas. The drift velocity, however, is directly proportional to the electric field strength and inversely proportional to the gas pressure.

As the applied voltage is increased, the drift velocity of the ions increases significantly and there is a corresponding decrease in the time available for recombination. Thus, the number of ion pairs collected increases with increasing voltage. In addition, the force acting on the ions accelerates the electrons faster than the heavier positive ions, and hence the drift velocity of the electrons is much higher than that of the positive ions.

The number of ion pairs collected increases with increasing voltage. Because the probability of reaching the collecting electrodes significantly exceeds that of meeting an oppositely charged ion, it is possible to reach a voltage such that all ion pairs produced in the volume by the primary ionizing event are swept from the volume and collected. At this point, further increases in applied voltage result in no increase in the number of ion pairs collected. The voltage at which this occurs is called the saturation voltage and the region (i.e., region II in Fig. 2) is called the ionization region. Gas-filled detectors that operate in this region are called ionization chambers. The voltage required to produce saturation in the ionization region depends on the type of gas used, gas pressure, and chamber dimensions.

Since the charge per ion is only 1.6×10^{-19} C, the ionization current caused by primary ion pairs produced in the chamber is small. This results in a current or a pulse from the chamber that is very small. Usually an electrometer or an electrometer tube with amplification stages is required to detect this small current. The events that occur in an ionization chamber are summarized schematically in Fig. 3.

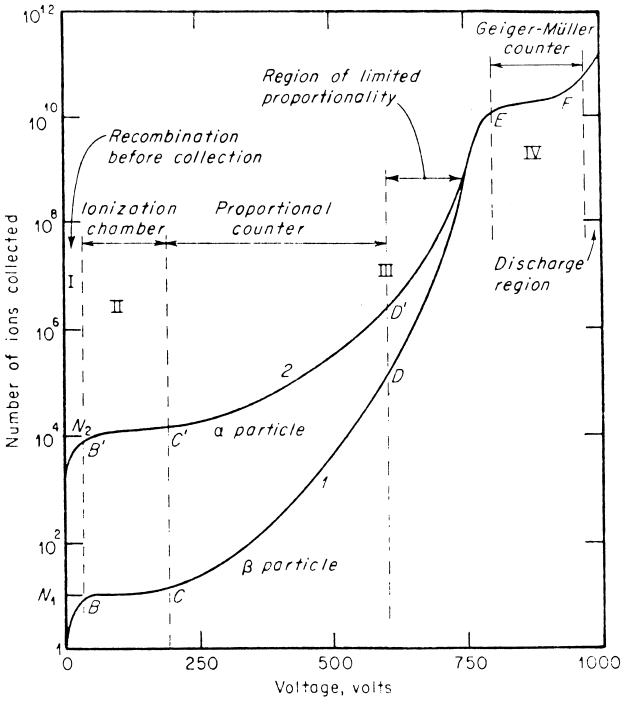

FIGURE 2 Counting characteristics of gas-filled detectors.

3. Proportional Counter Region

In region II of Fig. 2 a voltage was reached at which all primary ions were collected; that is, the collecting voltage was sufficient to sweep all ions from the detector volume before significant recombination occurred. In this situation the drift velocity of the electrons may reach 10^5 to 10^7 cm/sec as they acquire kinetic energy from the accelerating force of the electric field. As these ions move toward the electrodes, they may collide with gas molecules. In each collision a fraction of the kinetic energy is transferred to the molecules, exciting but not ionizing them. Energy is also lost in each scattering collision, but more energy is acquired as each ion moves on under the influence of the electric field.

The broad area of Fig. 2 marked region III presents a regime in which a phenomenon called gas multiplication begins to predominate. In the regime the voltage has been increased so much that the ions acquire sufficient energy to create additional ionization in the gas themselves.

Under normal conditions, electrons produced by a primary ionizing event will drift under the influence of the electric field toward the anode, whereas positive ions move outward (toward the cathode). In the arrangement shown in Fig. 1, the electric field intensity is strongest surrounding

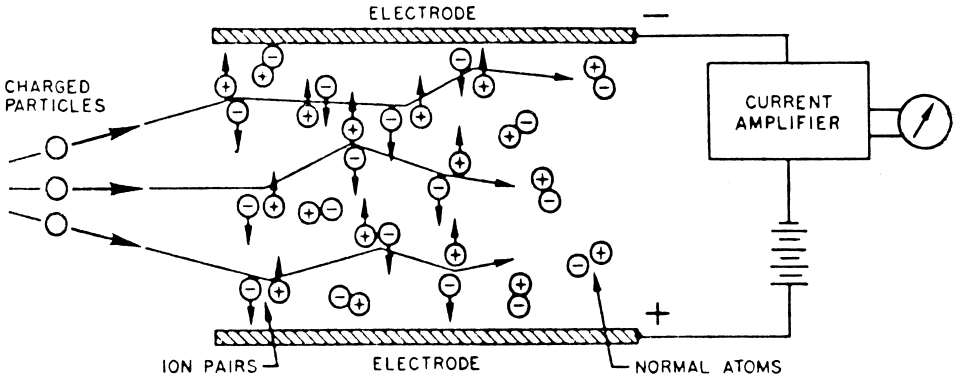

FIGURE 3 Operation of an ionization chamber.

the central electrode. When electrons enter this steeply increasing electric field, which is perhaps only a few mean free paths away from the central electrode, the result of their interactions with the gas molecules changes significantly. In this region the electrons receive sufficient kinetic energy to produce secondary ionizations in the gas; that is, the electrons, which resulted from a primary ionizing event, become directly ionizing particles. The electrons released in these ionizing events are called secondary electrons. These electrons are also under the influence of the electric field and ultimately may possess enough kinetic energy to produce additional ionizations. (The electrons produced in these tertiary ionizing events may also produce ionization.) Thus, each primary ionizing event produces an avalanche of electrons all moving toward the anode. This is the phenomenon of gas multiplication that is common to both proportional counters and Geiger-Müller counters.

As the applied voltage is increased, the gas volume in which gas multiplication can occur will expand. In a cylindrical chamber such an increase in applied voltage implies an increase in the radius of a cylindrical "multiplication" region around the anode, which results in a growth in the number of electrons produced per primary ionizing event. Under suitable conditions the effects of gas multiplication will become significant and the charge collected may be increased by several orders of magnitude (e.g., a gas multiplication factor, the number of ions collected per primary event, of $\geq 10^4$ is typical).

In the detector itself there may be several primary ionization events produced by the passage of a single ionizing particle. The electron avalanche, often called a Townsend avalanche, produced by each primary interaction moving paralel to the collector is confined to a small length of the wire. If there are only a few ionizations produced in the detector volume, there will be no interaction between the avalanches caused by the primary electrons. Within certain limitations, all the avalanches produced by individual electrons (from primary ionizations) are approximately the same size; that is, the total charge collected per primary event is uniform and independent of location within the chamber of the passing particle. Thus, the resultant output pulse, which is the sum of all these avalanches, is proportional to the number of primary electrons produced by the passage of the ionizing particle. The region designated region III in Fig. 2 is called the proportional region, and radiation detectors that operate in this region are called proportional counters, This process is illustrated schematically in Fig. 4.

Electrons are more mobile and hence are collected much more quickly than the positive ions. In many cases the avalanche region may extend only a fraction of a millimeter into the gas. This rapid collection of electrons from the gas volume leaves a positive-ion sheath around the central electrode that, in the time required for electron collection, appears to be essentially stationary. In the proportional counter, these positive ion sheaths remain localized. The counter may receive another pulse at another location on the electrode even while the original ion sheath remains in position on the electrode. Thus, the ability to resolve the passage of many ionizing particles is quite good in a proportional counter. This means that the counter is responsive to new ionizing events as soon as existing ions have been swept out of the main counter volume by the applied voltage.

If the electrode potential is increased further, there is a corresponding increase in the gas multiplication factor and the positive-ion sheath spreads along the electrode. This spreading causes a corresponding increase in the resolving time of the detector. (The resolving time is the minimum time that can elapse between the interactions of two successive particles within the detector if they are to produce two counts.) Since the avalanche in a proportional counter is terminated by the collection at the anode of the

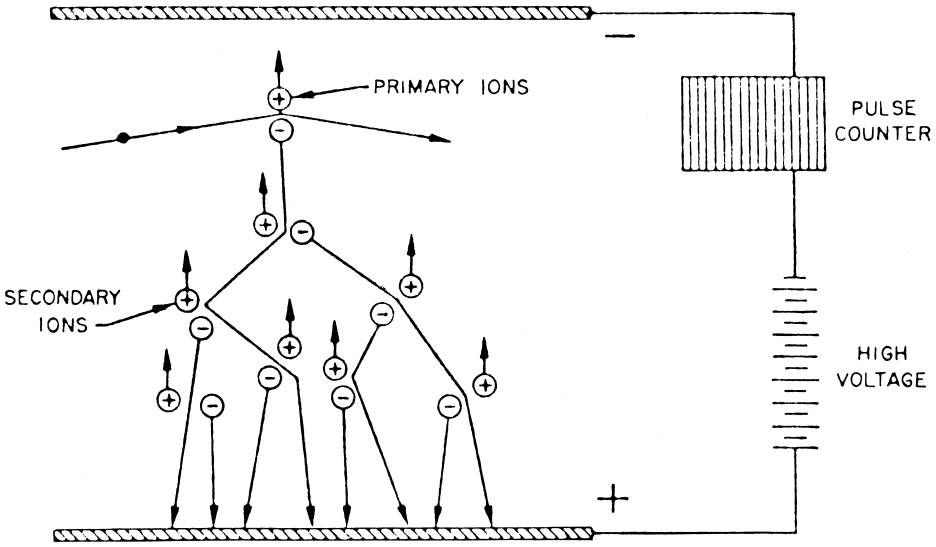

FIGURE 4 Operation of a proportional counter.

liberated electrons, the rise time of the pulse is governed primarily by the time required for electrons produced at the extreme end of the primary ion track to travel to the electrode. Usually this time is very short. In some applications a resolving time of 0.2–0.5 μsec may be obtained. However, such applications usually involve only the detection of radiation. In many other applications the actual resolving time may be limited, not by the detector, but by the external electronic circuits associated with the detector system.

In the region in which gas multiplication occurs, the multiplication for a given applied voltage is independent of the initial ionizing event since it depends only on the energy of the positive and negative ions drifting through the gas volume. In this way, the proportionality of pulse sizes is maintained; that is, the total number of ions is still proportional to the total energy lost by the incident particle in the gas volume. As the voltage is increased further, the strict proportionality no longer holds because not all primary ions generate an identical number of secondaries. In the upper portion of region III in Fig. 2, the pulse size is independent of the initial ionization and this is called the region of limited proportionality.

Before considering the last region, note that Fig. 2 also illustrates the difference in the number of ion pairs produced by densely ionizing particles (curve 2 for alpha particles) and more sparsely ionizing radiation (curve 1 for beta particles). In the region of limited proportionality it is still possible to distinguish between the two types of particles, but the ratio of the pulse heights provides no useful information. As the voltage is increased further even this ability disappears and in region IV the ability to distinguish between particles with different ionizing power does not exist.

4. Geiger-Müller Regime

The last region, region IV, presents one in which the charge collected is independent of the initial ionization because each primary event causes an "avalanche" of secondary ions extending throughout the whole counter volume. Thus, only the number of events is detected, not the energy transferred. Actually, the degree of gas multiplication is what differentiates this region from the proportional region. In region IV gas multiplication is limited only by the characteristics of the detector and the external circuit. This regime is commonly called the Geiger-Müller, or simply the GM, mode of operation.

In a GM counter the gas-multiplication process produces a pulse of a uniform size regardless of the number of ion pairs formed by the primary ionization. The avalanche continues until a certain number of ion pairs are produced in the detector volume, typically 10^9 electrons.

In the GM counter the initial Townsend avalanche builds up rapidly. It is terminated when all the electrons produced in the avalanche reach the central electrode because the positive-ion sheath causes a reduction in the field strength near the wire. The initial ionization avalanche is followed by successive avalanches, each one triggered by the preceding one. In a GM counter the effects of the Townsend avalanche are thought to be propagated by the excitation of neutral atoms within the avalanche region. These atoms may deexcite by the emission of photons in the UV region that may initiate further avalanches. In counters filled with

a mixture of gases, avalanches are propagated by ionization of other atoms that have a lower ionization potential than that of the original excited atom.

The UV radiation may also initiate the emission of photoelectrons by interactions in the cathode. The time sequence to these secondary avalanches may be delayed significantly when compared with that of the original discharge. This is due to metastable excitation states of the noble gases, which serve to delay the emission of the UV radiation and the subsequent production of photoelectrons and another avalanche.

In pure gases, positive ions may initiate photoelectrons as they are neutralized at the cathode. Figure 5a illustrates schematically this process. Positive ions migrate to the cathode and are neutralized by combining with electrons from the wall. This process (i.e., neutralization) may produce an additional electron by two separate mechanisms. First, a photon may be radiated from the wall and may produce more photoelectrons. The energy of this photon is initially the energy difference between the ionization potential of the ion and the work function of the cathode material.

The second mechanism that produces an additional electron occurs if the positive ion has an ionization potential that is at least twice the work function of the cathode. In this case, a second electron, rather than a photon, may be ejected from the cathode. In either case, the emission of this excess energy results ultimately in another avalanche.

The latter two processes are obviously governed by the transit time of the positive ions to the cathode. This implies a significant delay after the initial discharge before additional discharges are produced. In a typical situation the time interval may approach 200 μsec; this, in turn, introduces a long "dead time" during which the detector will not respond to new ionizing particles.

In all cases discussed here, the production of another electron, by whatever process, results in another discharge in the detector. This propagation of avalanches will continue unless steps are taken to prevent these occurrences. This is called quenching the discharge. Quenching consists of the introduction of an electronegative impurity that can absorb some of the excitations without further ionization. Thus, it limits further spreading of the avalanche region and permits early recovery of the ionized gas.

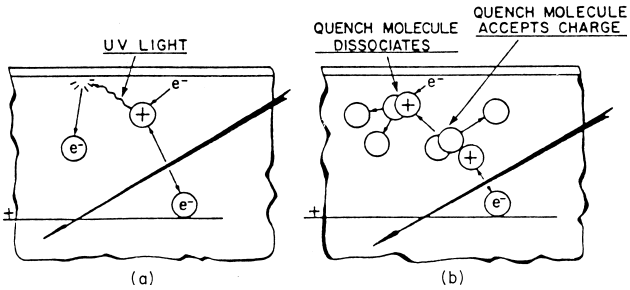

FIGURE 5 Operation of a GM counter: (a) formation of initial ion pair; (b) effect of quench molecules.

Quenching is not important in proportional counters because the number of excited atoms and ions formed is small. Thus, successive avalanches become smaller and result in no further charge generation. The need for quenching is another characteristic of the difference between proportional and GM counters.

A number of methods have been used to quench the self-perpetuating avalanches in GM counters. External circuits were used with older GM counting systems. These circuits were designed to reduce the voltage across the detector to less than the value required to maintain the discharge. The voltage is reduced only momentarily but this is sufficient to terminate the discharge of the counter. External quenching results in long resolving times and for this reason self-quenching GM counters are commonly used.

Self-quenching GM counters contain a quenching gas that is added as an impurity to the major gas-filling. Two types of self-quenching GM tubes are available: those quenched by the addition of a halogen gas and those organically quenched. In self-quenching GM counters, as positive ions move toward the cathode, there is a transfer of charge to the molecules of the quenching gas. When the charged molecules reach the cathode they dislodge electrons from the chamber wall, but this process results in the dissociation of the quenching gas molecules rather than the production of additional electrons (see Fig. 5b).

Typical organic quenching gases are polyatomic gases, including ethyl alcohol, ethyl formate, and amyl acetate. For organic quenching gases, the dissociation is irreversible and, therefore, the life of an organically quenched GM counter is limited. The useful lifetime is typically 10^8 to 10^{10} pulses. Bromine and chlorine gases are commonly used in halogen quenching GM counters. In this type of counter the quenching gas molecules recombine after a finite period and, thus, the counters have essentially an unlimited useful lifetime. However, all gas-filled counters have a practical limitation on their lifetime set by leakage of counter seals.

GM counters are typically cylindrical in shape and filled with a mixture of argon and quenching gas ($<1\%$) at a pressure of 40 Torr (5.3 kPa). The collecting electode is usually a tungsten wire; the outer electrode is a thin stiffened steel or aluminum shell coated with graphite to ensure uniform field distribution. For alpha or beta detection, counters have been designed with thin mica windows or very thin walls. Such counters require very careful handling and the window should never be touched by hand.

Since the Geiger regime is such that all ions produced by a single initiating event are collected as a single pulse

event, the output pulses have a constant amplitude regardless of the energy of the initiating event. Hence, a GM counter is a very sensitive radiation detector whose large output pulses may be of the order of volts in amplitude, which makes it convenient to count them directly. However, since it is not possible to correlate pulse amplitude with energy deposition in the detector, GM counters have found only limited use in dosimetry.

5. Ionization Chambers

Two broad classifications of ionization chambers are usually assigned in the discussion of radiation detectors of this type: passive detectors and active detectors. The term *passive* implies a situation in which several steps must be taken to use the detector. That is, the detector must be prepared for use, exposed to radiation, and evaluated. The information provided by the detector may be obtained at the end of the exposure or after the detector has been removed from the radiation field. Therefore, passive detectors have to be integrating devices since the detector reading gives the total exposure accumulated over the entire exposure period, unless the situation arises in which the detector is overexposed. In this case, the integrating (passive) dosimeter gives no useful information.

Active detectors are those that provide an immediate indication of the exposure received. This information is obtained through the use of an external electronic circuit that is connected (semipermanently) directly to the detector. The electronic system may be close to the detector, as in certain portable radiation detectors, or it may be located at some distance from the detector, as in the case of radiation detectors used in the operation of a nuclear reactor.

a. Passive ionization chambers. One of the earliest radiation detectors was the gold-leaf electroscope. This detector, although no longer used, remains as the basis for some radiation detectors used in personnel monitoring.

The quartz-fiber electroscope, developed originally by Lauritsen, replaced the gold-leaf design because it is more compact and portable.

In this detector there are two metallized quartz fibers, one movable and the other stationary, mounted on a central support. These fibers are insulated from the outer case and represent the sensitive element of the detector.

To use the detector, the operator must charge it through an external circuit; usually 200 V is required. Since the two fibers have the same polarity, the repulsion of like charges displaces the movable fiber from the stationary fiber. The electroscope is equipped with an eyepiece, a transparent scale, and a window to illuminate the fiber. When fully charged, the movable quartz fiber casts a shadow at the zero position on the scale. When the electroscope is exposed to radiation, ionization of the gas in the volume reduces the charge on the electroscope and the repulsive force between the fibers is reduced. The movement of the fiber toward the fixed fiber is reflected on the scale as the total amount of radiation exposure.

The above principle is applied in the self-reading pocket ionization chamber. In this device the fibers are in the form of loops and all components are enclosed in a rugged metal case. The chamber is small and can fit easily in a shirt pocket. Typically the range of the chambers is 200 mR, but others are available with full-scale readings up to 50 R.

The second major type of passive ionization chambers are those called condenser-type chambers, also called indirect-reading dosimeters. These devices are simpler than the electroscope type but require an external circuit not only for charging but also for evaluation. The detector consists of a cylindrical outer case constructed of a material, such as Bakelite, and a central metallic electrode coaxial with, but insulated from, the case. The detector is charged from a battery pack (or in some cases a stationary unit called a minometer), removed from the charger, and exposed to radiation. The exposure is evaluated by replacing the detector in the charger, which also serves as a reader, and evaluating the reduction in total charge that is proportional to the total ionization produced in the chamber.

Usually the charger–reader is calibrated to read directly in units of exposure, that is, roentgens. However, the exposure can be evaluated by the relation.

$$C \times V = Q.$$

In this relation, C represents the electrical capacitance of the chamber, V the change in voltage before and after exposure, and Q the charge collected during the exposure. If the chamber volume is known, then the exposure can be calculated on the basis of the definition of exposure.

Certain types of condenser chambers may serve as secondary standard devices for use in calibrating the output of X-ray machines, radio isotope sources used to calibrate survey instruments, and so forth. These detectors are often referred to as R chambers. These chambers are manufactured with walls of different thicknesses and compositions for use in a wide range of photon fields. Usually, the wall material is air-equivalent and the thickness of the wall is adjusted for a particular photon energy. For example, R chambers are available for use in the energy range 6–35 keV and also for photons in the energy range 0.25–1.4 MeV. In addition, the total exposure range may be selected by choosing a detector of a certain volume. Typical detectors in use have sensitivities from 0.025 R to 250 R. Other sensitivities are available (e.g., 0.001 R) for use in special exposure situations, such as environmental

measurements or for the measurement of "stray" radiation aroun heavy shields. However, it must be remembered for all indirect-reading chambers that the calibration is valid only for energies near that of the calibration source.

R chambers require a charge–reader for use. This charger–reader gives an output directly in units of exposure (i.e., roentgens). Normally the complete system, usually called an R meter, is purchased with calibration certificates from the National Institute for Standards and Technology (NIST) or from a regional calibration laboratory.

The simplicity of passive ionization chambers is such that there are a variety of detector types and arrangements that have been designed for special applications. Usually, the walls of the chambers are constructed of material that is air-equivalent; that is, the material has photon scattering and absorption properties similar to those of air. Materials such as Bakelite, graphite, polystyrene, nylon, aluminum, or any other material that for a selected photon energy has similar characteristics are commonly used.

For other applications, chambers may need a wall material that is tissue-equivalent of muscle-equivalent. Chambers have also been manufactured with bone-equivalent materials. A large number of equivalent materials are available for the construction of the chambers. The choice depends on the application, materials available to the designer–builder, and expected accuracy of the intended use. For example, small condenser chambers can be made sensitive to thermal neutrons by the addition of a material such as boron, either as a linear or as part of the wall material. Condenser pocket chambers used as neutron dosimeters are commercially available and be used for personnel monitoring. However, since the chamber responds to photon irradiation as well as thermal neutrons, the user obtains no information as to the relative contribution of each radiation to the measured exposure when both are present.

This disadvantage can be overcome by the use of two chambers, one sensitive only to photons and the other sensitive to neutrons as well as photons. Both detectors must be properly calibrated since even the detector that responds only to photons has a finite (but small) response to thermal neutrons. Although this presenets no real problems, the simple example illustrates the complexities encountered with measurements in mixed-radiation fields, even with the simplest radiation detectors.

b. Active ionization detectors. In an active (or current-type) ionization chamber, electrons collected at the anode compose a direct current that can be amplified in an electrometer tube and measured with a microammeter. For situations requiring high accuracy, the small current may be measured with a vibrating reed electrometer that transforms a small direct current into pulses that can be amplified. Essentially all ionization chambers are evaluted in one of these ways.

Probably the simplest of the active ionization chambers, yet the type least familiar in terms of widespread use, is the free-air ionization chambers. This detector is used as a primary standard in national standardization laboratories throughout the world. The chamber is a parallel-plate design that satisfies the operational definition of exposure in units of roentgens. The photon beam is collimated as it enters the chamber and interacts in a volume of air defined by the collimator aperture and the electric field between the collecting electrodes. The chamber features a guard ring and guard wires to maintain straight lines of force between the two electrodes. The entire device is enclosed, usually with a lead-lined material. Ions produced in the chamber volume due to photon interactions are collected at the plates. The current flow is measured by an external circuit, and from it the number of ions produced in the volume and, ultimately, the exposure can be calculated.

For this measurement to be valid, electronic equilibrium must exist in the detector. In other words, all the energy of primary electrons produced in the sensitive volume of the chamber must be dissipated in the chamber. Obviously, many electrons produced in the detector volume by photon interactions will leave the sensitive volume. Electronic equilibrium is maintained by making the entire chamber larger than the maximum range of the primary electrons in air. In this situation, primary electrons produced in the sensitive volume that leave the volume are replaced by primary electrons that were produced outside the sensitive volume but enter it. Thus, electronic equilibrium is obtained as an electron of equal energy enters into the sensitive volume for every electron that leaves.

The thickness of air between the entrance port and the collecting volume needed to provide electronic equilibrium increases with increasing photon energy. For example, 9 cm of air is required for highly filtered, 250-kV X-rays, whereas for 500-kV X-rays, the air thickness is 40 cm. This fundamental requirement limits the use of free-air chambers since the size of the chamber for higher photon energies is extremely large. For example, the NIST has three free-air ionization chambers. The chambers are intended to cover the X-ray generating potentials of 10–60 kV, 20–100 KV and 60–250 kV. These chambers were manufactured at the NIST, but similar chambers are commercially available with a useful range up to ~300 keV. At ranges greater than this, photon energy, operational difficulties, chamber size, and so forth limit this detector's usefulness even in a standards laboratory.

The surface dose due to beta-emitters may be determined by use of the extrapolation chamber. This special

ionization chamber is a parallel-plate detector similar in design to the free-air chamber described above. However, in this design the distance between the plates can be varied. Usually, one plate that acts as a thin window is placed as close as possible to the source to be measured. A series of measurements is obtained while the spacing between the plates is decreased. The results of these measurements are plotted and extrapolated to zero spacing. This gives the dose at the surface of the beta source and eliminates secondary gas or wall effects.

The use of an extrapolation chamber is a good example of the application of the Bragg-Gray principle to the measurement of absorbed dose (discussed earlier in this article). The chamber, introduced by Failla, is quite useful because it recognizes the fundamental requirement that the detector cavity be small compared with the electron ranges. The chamber has also been used for measurements in areas where no electronic equilibrium exists, for example, at interfaces between two dissimilar materials. Currently, there is increased interest in the use of extrapolation chambers for measurements in beta-radiation fields found in nuclear utilities. However, this is a special application of this detector system since the chamber is not sufficiently rugged to survive in routine use in these environments. Tissue-equivalent extrapolation chambers have also been designed and used in a number of dosimetry research activities. However, there has been no widespread application of this system to routine dosimetry.

Ionization chambers have found wide use in surveys for radiation protection purposes. The ionization chamber is the only gas-filled detector that allows the direct determination of the absorbed dose. This is because the measured current is directly proportional to the ionization produced in the sensitive volume and that in turn is directly proportional to the energy deposited in the detector.

A number of active detectors have been designed with characteristics similar to the condenser R chambers discussed in the previous section. One such system is a precision instrument designed specifically for the measurement of ionizing radiation used in medical diagnostic and therapeutic procedures. The individual chambers have walls constructed of air-equivalent materials, and the sensitive volume is filled with air. A preamplifier located close to the detector allows a reasonably long run of cable between the detector and the readout. The readout system functions either as a rate-meter or as an integrating device. In addition, a high-voltage supply for the chamber is an integral part of readout. The entire system is very stable and accurate, and state-of-the-art solid-state electronics makes it easy to operate. As with the condenser R chambers, the detectors may be purchased with a calibration traceable directly to the NIST. These systems have found wide use in instrument calibration facilities in many utilities. The systems provide immediate and accurate indications of the exposure rates, which lends confidence to portable calibration procedures. In addition, the systems can be used in the integrate mode to monitor standard exposures of pocket chambers or TLD badges.

A multitude of special detectors have been designed and used for dosimetry in mixed-radiation fields. These systems use paired chambers, one of which is sensitive essentially to only one components of the field and the other detector which is sensitive to both components of the radiation field. If the detectors have been properly calibrated, the exposure rate (or dose rate) of the radiation field for each component can be obtained by subtraction. One such system uses a chamber constructed of tissue-equivalent material through which a tissue-equivalent gas is flowing. This detector is sensitive to both gamma and neutron radiation. The other detector is constructed of graphite, and the filling-gas is carbon dioxide. The graphite is sensitive only to gamma radiation, whereas the tissue-equivalent chamber is sensitive to both neutron and gamma radiation. The neutron component of the radiation field can be obtained by substracting the dose rate indicated by the graphite detector from that indicated by the tissue-equivalent detector.

6. Proportional Counters

Proportional counters in common use are usually of two types: gas-flow and sealed tubes. In the gas-flow device, the counting gas is continuously circulated at a slow rate through the detector volume. These detectors have essentially an infinite life because the counting gas is constantly replenished and molecules degraded by the ion-formation process are continually removed. Gas-flow detectors are standard equipment in most laboratories. However, these detectors are not usually applied to dosimetry. Sealed proportional counters have a finite life since there is usually no mechanism for replenishing the filling-gas that will accumulate impurities due to corrosion of sealing materials in bombardment effects.

a. Sealed proportional counters. The widest use of sealed-tube proportional counters is in the detection of thermal neutrons. A material with a high-neutron cross section (e.g., boron) is introduced into the chamber and the counter functions by detecting the charged particles liberated by the (n, α) reaction in ^{10}B. The reaction has a high–thermal-neutron cross section ($\sim$3800 b) and exhibits a simple-energy dependence over a wide neutron-energy range, from the thermal energy to $\sim$30 keV. The reaction is exothermic and an energy release of up to 2.78 MeV is shared between the alpha particle and the recoil lithium nucleus. There is also an excited state of ^{7}Li in which a 0.48-MeV gamma ray is emitted and, in this

case, the shared energy is 2.30 MeV. This latter reaction is the most probable.

The boron may be incorporated in the detector in two ways. First, a thin layer of boron may be used to coat the inside of the cathode. These boron layers are usually $\leq$0.5 mg/cm^2 because a coating thicker than the maximum range of the alpha particles ($\sim$0.75 mg/cm^2) would actually reduce the sensitivity of the detector. This type of detector has the advantage that a conventional counting gas can be used. However, alpha particles produced in the boron lining lose some of their energy in escaping the wall and produce a wide distribution of pulse heights. The count rate versus operating voltage curve obtained has a plateau with a slope greater than that obtained in other proportional counters.

An alternative method of introducing the neutron absorber is to combine it with the counting gas. In this detector the gas-filling is boron trifluoride (BF_3) enriched in the isotope ^{10}B, typically at a pressure of 120–600 Torr (16.3–81.6 kPa). This detector has the advantage that the (n, α) reaction is produced in the gaseous volume, and, therefore, the entire energy of the alpha particle will be used in producing ionization in the sensitive volume. Usually the plateau in the operating curve is very flat.

Proportional counters designed to detect neutrons have found wide use in mixed neutron–gamma-radiation fields that may exist around reactors, accelerators, or certain isotopic neutron sources. The detectors not only have good discrimination characteristics against gamma radiation but also may be used to detect both thermal and fast neutrons. This is accomplished by the use of an additional moderator. For example, in normal use a BF_3 proportional counter is sensitive only to thermal neutrons. However, if a thick moderator, such as paraffin or polyethylene, is placed around the detector, it becomes sensitive to fast neutrons. Fast neutrons incident on the moderator are thermalized and are detected by the proportional counter as thermal neutrons. The moderator may be any convenient shape: spheres, right-cylinders, and rectangular moderators are in common use. Thus, with the BF_3 counter outside the moderator, the thermal-neutron component of the radiation field is detected. Inside the moderator the fast-neutron component of the field is detected. In practice, these detectors must be carefully calibrated before use because often no precise information is available on the sensitivity of a specific detector, the energy spectrum of the fast-neutron field or the percentage of the fast-neutron component that is thermalized. In addition, the response of the detector system depends on the thickness of the moderator materials and the incident neutron energy.

Many types of proportional counters have been designed for use as dosimeters, especially for the detection of neutrons. There has been wide use of ^{3}He-filled detectors and detectors filled with methane. Proportional counters have also been lined with hydrogenous material, paraffin or polyethylene, and used as fast-neutron detectors. One such detector is the Hurst absolute fast-neutron dosimeter. This cylindrical proportional counter is lined with polyethylene and the gas-filling is cyclopropane (ethylene has also been used). The gas pressure is typically 500 Torr (68 kPa) for cyclopropane and 750 Torr (102 kPa) for ethylene. In either case, the gas and the walls have the same atomic composition, which satisfies one of the requirements of the Bragg-Gray relationship. In this case, ionization produced by proton recoils (due to fast-neutron interactions in the wall) produces relatively large pulses. Using this detector allows an individual to measure the energy absorbed per unit mass of the gas. From this measurement, the energy absorbed per gram of tissue can be determined since, over the energy range 0.01–20 MeV, the ratio of the absorbed dose in ethylene to that in tissue is $\sim$1.45.

The Hurst counter has a low response to gamma radiation caused by the differences in pulse heights between those produced by proton recoils and secondary electrons. In addition, the associated electronics usually feature a discriminator that allows the measurement of a fast-neutron dose of 0.001 rad/hr in a ^{60}Co–gamma-radiation field of 50–100 R/hr.

Many other specialized proportional counters have been designed and used in radiation measurements. One of these is the Rossi LET chamber. This proportional counter consists of a sphere of tissue-equivalent material featuring a helical field-defining wire around the central electrode. The intent of the detector is to simulate small volumes of tissue, by varying the filling pressure of the tissue-equivalent gas. Absorbed dose may be determined through a measurement of the pulse-height distributions from the detector and a calculation of the LET distribution from these data. These detectors are available commercially, in sizes up to $\sim$2 in. (5 cm) in diameter, with quick-disconnect fittings for gas-filling and built-in preamplifiers. However, after an initial flurry of interest, this type of proportional counter has not found wide use in neutron dosimetry research.

Tissue-equivalent proportional counters (TEPCs) have been constructed in various sizes and shapes for a variety of applications. One application of the TEPC has been its experimental use to monitor the radiation exposure of flight crews on commercial airliners and crews on space shuttle missions. These specially designed and constructed detectors use a tissue-equivalent plastic (Shonka A-150) as the wall of the chamber and propane as the filling-gas. The detectors are portable but can be placed in mountings in the spacecraft to provide an indication of the dose rate and total dose associated with each mission.

It is anticipated that these TEPC detectors will be used on the International Space Station and also will be present in the spacecraft destined for the Mars mission. On this mission, two detectors will be used, one of tissue-equivalent material and another constructed of graphite. These two detectors will allow separation of the radiation field into two components.

Another method for detecting thermal neutrons with proportional counters is to use a fission counter. This detector uses a thin coating of a fissionable material, for example, ^{235}U, on the electrodes to detect thermal neutrons. Thermal-neutron capture in the ^{235}U results in a fission event and the fission fragments produce a high density of ion pairs in the detector gas. The advantages of a fission counter are its low sensitivity to very high gamma-radiation fields and the large amplitude of pulses due to the fission fragments, which allows easy discrimination against other radiation, including alpha particles emitted in the normal radioactive decay of ^{235}U. Fission chambers are used widely as part of the start-up instrumentation on nuclear reactors but not as dosimeters.

B. Solid-State Detectors

Although gas-filled detectors satisfactorily fulfill many detection tasks, they have a number of inherent shortcomings for many applications. The low density of the gas medium makes the interaction with incident radiations inherently inefficient, especially for photons and high-energy radiations, where large detector volumes or high gas pressures would be required for good sensitivity. Also, the finite drift mobility of the ions produced in the gas results in a slow response time, of the order of milliseconds in most cases. This leads to an appreciable dead time, during which the detector may not respond to fresh-incident radiation, and to a slow rise time in the charge collection pulses, which again limits the rate of detection. One way of overcoming these limitations is to use condensed-state or solid-state detectors, in which signal generation processes occur more rapidly, and where the high atomic density results in a high probability of interaction over a relatively short range. There are several phenomena that meet these conditions, though no one detection mechanism is ideal for all applications.

1. Scintillation Detectors

The first solid-state detection process discussed here is known as scintillation detection. It was one of the earliest to be used, if only in a rather primitive form when Rutherford and his collaborators observed the emission of alpha particles by means of a spinthariscope in the 1920s. The spinthariscope consisted of a screen of zinc sulfide that could fluoresce or "scintillate" when struck by an alpha particle. An observer, sitting in a fully darkened room (after several hours in which the observer's eyes adjusted to the dark) could count these scintillations, which could then be used to estimate alpha activities. Modern scintillation counting dates from 1947 when Coltman and Marshall developed the photomultiplier tube and Kallmann and Broser combined the scintillating material with a photomultiplier, enabling more efficient light detection while eliminating problems of eye fatigue.

The general principle of scintillation counting depends on interaction of the incident radiation with a suitable fluorescent material, called the scintillator or phosphor. On absorbing energy from the incident radiation the phosphor under-goes excitation to a higher electron state. This is followed by a prompt (or delayed) return to the ground state, accompanied by emission of electromagnetic radiation (light) of a wavelength appropriate to the difference in energy levels. Provided the material is transparent to light of that wavelength, this light may be observed outside the phosphor material. Otherwise, only light emission from the surface layer can be seen. In many materials the emitting transition also corresponds to an absorption transition, so that the energy cannot escape, that is, the material is opaque at that frequency. For this reason it is usually necessary to introduce an impurity into the scintillator to which the exciton can be transferred. The impurity gives rise to trapping levels from which transfer to the ground state can occur at a wavelength significantly different from the absorption wavelength; therefore, the light is emitted in a region for which the material is transparent.

Another reason for introducing impurities into phosphor materials is to serve as wavelength shifters. Many materials, especially organic materials, will fluoresce readily when excited. However, the transitions associated with light emission tend to give rise to wavelengths in the near or far UV regions, where detection of this light is relatively inefficient and many materials require replacement of glass envelopes by quartz. By introducing small concentrations of impurities into the scintillator enough characteristic trapping centers can be provided to ensure a high probability for exciton transfer leading to a high proportion of fluorescence emission from these now lower energy levels. The net effect of this is that emission may then occur in the blue or green regions of the visible spectrum where sensitive photomultiplier detectors are readily available and at a much lower cost.

The fluorescent light emitted by the excited scintillator is guided through a suitable optical medium to a photomultiplier tube. In the photomultiplier each incident light photon is photoelectrically converted to one or more electrons. These photoelectrons are then accelerated by an electric field and hit a low–work-function electrode, called

a dynode, where each energetic electron causes the emission of two or more secondary electrons. Repetition of this secondary electron emission process at successive, more positively charged dynodes enables each initial electron to give rise to a large swarm of electrons as the electrons move down the "multiplying" chain. At the last dynode, the resulting charge pulse can be collected and further amplified, if desired. In general the magnitude of this pulse will be proportional to the number of photons reaching the photocathode and, hence, to the energy of the incident radiation. The number of pulses, representing the number of separate (in time) exciting events in the phosphor will be proportional to the intensity of the incident radiation. After amplification, the pulse rate can be counted to obtain intensity information. With suitable treatment of the electronic pulse output from the photomultiplier, the distribution of pulse amplitudes can be used to obtain energy spectra, particularly for gamma radiation.

The key component in scintillation counting is the scintillator, where conversion of incident radiation into light occurs. For efficient detection. the scintillator, or phosphor, should have a high density and a high fluorescent-light yield, be transparent to the emitted light with little internal scattering, have a refractive index compatible with the light guide and photomultiplier window, and have adequate physical and mechanical stability. The dimensions of the scintillator should be sufficient to stop most of the incident radiation and be readily contained in a light-tight shield. Not all of these criteria can be met by any one scintillator material and a variety of phosphors have been developed for different applications. Scintillator materials may be categorized as inorganic or organic and may be solid or liquid. Various gases, particularly the noble gases, also exhibit fluorescence phenomena, but they offer no practical advantages over gas-filled ion collection systems and, thus, are not considered further here.

Although scintillation detectors are used extensively in radiation detection, their use in dosimetry has been limited. For dosimetry, LiI(Eu) is the major inorganic scintillator of interest. This scintillator is used primarily for the detection of fast and thermal neutrons. Inorganic scintillators have found wide use in dosimetry; however, the ability to produce reasonably pure crystals of some of the materials has limited the application of organic scintillators to dosimetry to only a few specific phosphors. Of these, the most popular are plastic scintillators, in particular NE-102 and NE-213.

2. Thermoluminescence Dosimetry

The most popular method of personnel dosimetry at commercial nuclear power plants (as well as many other facilities) in the United States involves the use of thermoluminescence dosimetry (TLD). TLDs have many of the same characteristics as those required for an "ideal" dosimeter. However, TLDs also have certain characteristics that influence their response and the resulting dose estimates obtained with the dosimeter. These characteristics must be known and appreciated if this system is to be used and evaluated properly as a personnel monitor. In this section, a general discussion of the mechanism of thermoluminescence and the characteristics of the most popular TLD materials will be presented.

3. Theory

Thermoluminescence (TL) has been observed for centuries; it occurs whenever certain fluorites and limestones are heated. It is reported that Sir Robert Boyle and his colleagues studied TL in the early 1660s and that Boyle presented a paper on TL to the Royal Society in London in 1663. Some investigators have gone even further in examining the history of TL; one investigator has postulated that the early cavemen and early alchemists often observed the phenomenon of TL, even though neither possessed an explanation of the mechanism. TL has been studied extensively; such well-known scientists as Henri Becquerel (and his father before him) have mentioned the phenomenon in their scientific papers. However, it was not until about 1950 that Daniels proposed the use of this phenomenon as a radiation detector; more specifically, it was his suggestion that TL could be used as a radiation dosimeter. It is interesting that this suggestion was so late in coming because the relation between TL and exposure to X-rays was observed as early as 1904.

In TLD the absorbed dose is determined simply by observing the emitted light from the crystal as the crystal is heated under a controlled manner. The amount of light emitted is directly proportional to the radiation energy deposited in the TL material. However, TLD is not an absolute dosimetry system, and therefore the system must be properly calibrated to establish the relationship between the amount of light emitted and the deposited energy (i.e., the absorbed dose). Detailed discussions of the chemical and physical theories of TL have been offered by many scientists, but some would contend the actual phenomenon is not completely understood. However, the basic phenomenon is qualitatively understood and this is sufficient for the purposes of discussing TL applied to radiation dosimetry.

Normally, TL is explained by referring to a hypothetical energy-level diagram of an insulating crystal. Although the model is greatly simplified, it serves to illustrate the fundamental process. If a crystal exhibiting TL (sometimes called a phosphor) is exposed to ionizing radiation, interactions in the crystal free electrons from their

respective atoms (ionization). In the energy-level diagram, electrons are released from the valence band and move to the conduction band. The loss of electrons in the valence band creates positively charged atoms (or sites) called holes. The electrons and holes may migrate through the crystal until they recombine or are trapped in metastable states. The "traps" prevent the electrons from returning to the valence band, and therefore the radiation energy is in effect stored in the crystal. The metastable states are thought to be associated with defects in the crystal or with impurity sites (actually, impurities are introduced intentionally into crystals used as TLDs). These impurity sites are called trapping sites, and it should be remembered that these sites may exist at many energy levels in the crystal; it should not be assumed that all the electrons are trapped at exactly the same energy level. The importance of this point will be made clear in the discussion of the characteristics of typical TLD materials.

Basically, the crystal has stored the energy that caused the electrons to be released. If the crystal can be stimulated in some way so that the stored energy is released and that released energy can be measured in some way, then the material can be used as a radiation dosimeter. Usually, the energy to release the electrons is supplied by thermally heating the crystal (thermo); the stored energy is then released in the form of visible light (luminescence). Thermally heating the crystal was one of the first approaches taken to release the energy stored in the TLD. There are a number of possible ways to release this stored energy and there are even variations in the design of systems to thermally heat the crystal. For example, optical stimulation has been studied extensively. Nevertheless, in the discussions that follow, it will be assumed that the TLD material has been heated conventionally using thermal heating.

At this point, there are two possible ways the stored energy can be released. First, as the crystal is heated, sufficient energy may be given to the trapped electrons to release them for the trapping sites and raise them into the conduction band. The electron may recombine with a hole, returning to the valence band, and giving up the excess energy in the form of light (a luminescence photon). Light photons are released with energies proportional to the difference between the excited and stable electron energy levels. On the other hand, the hole trap may be less stable than the electron trap, and when the crystal is heated the hole receives sufficient energy to wander until it combines with a trapped electron and a luminescence photon is released. Usually, since the two processes are similar only the first possibility is presented in discussions of TL.

The energy gap between the valence and conduction bands is related to the temperature required to release the electrons and produce luminescence photons. In practical situations, many trapped electrons and holes are produced during irradiation of the TLD. As the temperature of the crystal is increased, the probability of releasing any electron is increased. At some sufficiently high temperature, there is virtual certainty that all electrons will be released. Thus, the emitted light from the crystal may be weak at low temperatures, pass through one or more maxima at higher temperatures, and then decrease again to zero.

4. TLD Glow Curves

A plot of the light emitted by the TLD as a function of temperature (or time) is called a glow curve. The most usual case is to plot the temperature of the crystal on the abscissa versus the light emitted by the phosphor on the ordinate. However, literature on commercially available systems typically presents the latter (i.e., time versus light emitted). Glow curves are obtained by electronically plotting the signals from a thermocouple in close contact with the container holding the TL material and the current from a photomultiplier tube (PMT) viewing the light emitted by the material. More modern systems now use an electronic system called a glow-curve analyzer, instead of plotting these curves on a plotter. These newer systems allow extensive analysis of the structure of the individual peaks constituting the glow curve.

Typical glow curves will show one or more peaks (maxima) as traps at various energy levels are emptied. The relative amplitudes of the peaks indicate approximately the relative populations of electrons in the various traps.

Either the total light emitted during part or all of the heating cycle, or the height of one or more of the peaks, may be used as a measure of the absorbed dose in the phosphor (or the exposure in air, depending on the calibration technique). When the peak height technique is used to determine the absorbed dose, the heating cycle must be extremely reproducible to avoid causing peak height fluctuations. These fluctuations influence strongly the accuracy and reproducibility of the dosimetric measurements. For this reason, most commercial TLD systems use a technique that simply integrates the light output (i.e., the PMT current) over part or all of the heating cycle. The results obtained with this technique are much more reproducible because only the heating rate and the maximum temperature of the sample must be controlled.

One of the disadvantages of most TLD systems is the fact that there is no permanent record of the exposure as is possible with other methods of dosimetry (e.g., film badges). However, it is possible to record the glow curve for each individual TLD as it is read and to use this as the permanent record of the exposure. This is actually done in some dosimetry programs. In such cases, the reproducibility of the heating cycle is extremely important.

After the traps have been emptied by heating to a high temperature for a sufficient length of time, and the phosphor has been cooled, the TLD is ready to be reused. In some cases, the heat applied during the reading cycle is sufficient to prepare the TLD for reuse. In other cases, special heat treatments (called annealing) are required before the TLD can be put back into service. The exact prescription for the heat treatment of a TLD material depends on the material itself, form of the material, and intended use (e.g., the anticipated exposure level).

5. TLD Readers

The basic components of a device to evaluate (or "read") TLDs are extremely simple. These consist of a system to heat the material, a detector sensitive to the light emitted by the TLD, and a measuring or recording instrument. In a research situation, it is common to use both a digital system to record pulses from the PMT and an X–Y plotter to record glow curves. Commercially available systems usually give only the integrated current but some can be calibrated and adjusted to read-out directly in units of exposure (mR or R). Some of the more sophisticated systems may be coupled directly to a computer-based, record-keeping system in which the measured exposures are entered directly into the employee's exposure record. The characteristics of commercially available systems vary widely and the choice of vendor and the complexity of the reader are highly dependent on the application of the TLD system.

There are a number of factors that may affect the shape of the glow curve. In addition to heating rate, these include the size, shape, and thermal conductivity of the sample; the irradiation and annealing history of the sample; the recording instrument selected for use; and other spurious effects that may appear. The term *tribothermoluminescence* is normally used to describe many of these spurious effects, some of which are unexplained.

6. TL Materials

There are a large number of TL materials. In fact. most materials thermoluminesce to some extent and with careful use and proper calibration many common materials can be used as a dosimeter. For example, approximately 17 years after the bombing of Hiroshima, the TL in roof tiles taken from houses in the city was used to provide a check on dose estimates made for the survivors. TL has been used for dating meteorites, minerals, and ancient pottery as well as for personnel radiation monitoring and other dosimetry uses.

To be useful for most dosimetric applications, the TL material should have a relatively strong light output and be able to retain trapped electrons for reasonable periods of time at the temperatures expected to be encountered in the particular application. This requirement limits useful TL phosphors to those with traps $\geq 80^{\circ}$C. More detailed information is presented in the sections that follow.

a. Calcium sulfate. Manganese-activated calcium sulfate ($CaSO_4$: Mn) has a long history as a TL dosimeter. In the late 1960s it held the distinction of being the most widely studied phosphor of calcium sulfate. Reports of studies of the TL properties of this phosphor can actually be found in the literature as early as 1895.

This phosphor has a glow curve with a single peak occurring in the range 80–120°C. Commercially available $CaSO_4$: Mn is listed as having the temperature of the main TL glow peak at 110°C. There have been a wide variety of fading rates reported for this phosphor (typical fading rate of 50% in the first 24 hr), and this represents one of the major disadvantages in the use of the material. This disadvantage is offset partially by the high sensitivity and the wide usable exposure range exhibited by this phosphor. In the evaluation of TLD materials, LiF (TLD-100) is considered the standard; all other materials are compared to it. At ^{60}Co energies, the light output of $CaSO_4$: Mn per unit exposure is 70 higher than that for LiF. This means that the TLD material should be useful for measurements at very low dose rates perhaps approaching environmental levels. The TLD can be used routinely to measure in the 1- to 10-mR range and, with care, can be extended down into the μR range. The dosimeter has been used for measurements in the exposure range of 20 μR with a standard deviation of $\pm$ 50%.

The response of the phosphor as a function of exposure is linear, but there is some disagreement as to the upper limit of usability. At least one investigator found the upper limit of linear response to be ~10,000 R. Another investigator reported a value slightly less than 5000 R, while a third reported that the behavior of the phosphor was nonlinear at exposures >400 R. The commercially available TLD material is specified to be usable up to 10,000 R. However, results such as these serve as good examples of the possible influence of fading during exposure or storage, variations between batches of the TLDs due to phosphor preparation techniques, environmental factors such as UV light, and so forth.

Other characteristics of this TLD material influence its usefulness as a dosimeter. The material has a density of 2.6 g/cm^3 and an effective atomic number (effective Z or Z_{eff}) of 15.5. The dosimeter is not tissue-equivalent and shows a marked overresponse at low photon energies (due to the high Z_{eff}). Another measure of usefulness of a TLD material is obtained by taking the ratio of the response per unit exposure of the TLD at 30 keV to the response per unit exposure of the dosimeter at ^{60}Co energies. For $CaSO_4$: Mn, this ratio is ~10.

Commercially available calcium sulfate doped with dysprosium is sensitive to thermal neutrons. During Comparison of the neutron sensitivity of TLD materials it is common practice to compare the response to a thermal-neutron fluence of 10^{10} n/cm^2 and relate this exposure to a gamma-equivalent exposure. For commercially available calcium sulfate doped with dysprosium, such an exposure would produce a light emission equivalent to a gamma-ray exposure of 0.5 R. No data were available on the commercially available manganese-doped material. However, for the same neutron fluence, a manganese–lithium-fluoride doped material would yield a light output equivalent to an exposure of 100 R. If ^{6}Li fluoride is included in the manganese-doped material, neutron exposure at the same fluence would be equivalent to a gamma-ray exposure of $>$1000 R. The thulium-doped material is the least thermal neutron–sensitive material with the standard thermal-neutron exposure corresponding to an equivalent gamma-ray exposure of only $\sim$0.2 R.

It should be pointed out that calcium sulfate is extremely light-sensitive (UV), which enhances fading considerably. The vendor recommends that these materials should be handled, used, and stored in opaque containers to reduce fading due to light exposure. Some procedures even call for handling this material in reduced and nondirect light. If these materials are used in environmental-monitoring programs, the light sensitivity must be taken into account in the handling, packaging, use, and evaluation of the dosimeters.

b. Calcium fluoride. Calcium fluoride (CaF_2) exists in nature as the mineral fluorite. Fluorite exhibits a strong radiation-induced TL and, after special treatment, can be used satisfactorily for radiation dosimetry purposes. The first reported use of the "radiothermoluminescence" of natural calcium fluoride occurred in 1903.

This phosphor exhibits three principal peaks in the glow curve that occur in the temperature ranges 70–100°C, 150–190°C, and 250–300°C. The material has shown serious fading characteristics as a function of storage time, most likely due to the low-temperature glow peak. The response of calcium fluoride as a function of gamma-ray exposure is linear from a few mR to $\sim$500 R with a SD of $\pm$2%. Enclosing the material in a metal filter (e.g., lead) can make the dosimeter response constant, within $\pm$20–30%, over the gamma-ray energy range of 80 keV to 1.2 MeV.

The response of the natural phosphor to fast neutrons is negligible. However, the response to thermal neutrons is about the same as for gamma rays, per rem in tissue. Some investigators have studied the use of calcium fluoride as a dosimeter for mixed-radiation fields of thermal neutrons and gamma rays. However, for routine personnel monitoring, this technique is not used.

Synthetic calcium fluoride materials are available commercially. One of these phosphors is activated with manganese and shows only a single glow peak located at $\sim$260°C. In some cases, this phosphor has exhibited a spurious luminescence, but proper techniques and some innovative dosimeter devices have reduced the significance of this spurious effect.

CaF_2:Mn has a density of 3.18 g/cm^3 and an effective atomic number (Z_{eff}) of 16.3. The efficiency of the material relative to LiF (at ^{60}Co energies) is 10 and the energy response at 30 keV relative ^{60}Co is $\sim$13. The dosimeter can be used to measure over the exposure range 100 μR to 300,000 R. Fading is quoted as being $\sim$10% in the first 24 hr and $\sim$15% (total) in the first 2 weeks. Thermal-neutron sensitivity of the phosphor has been reported by many investigators. For the standard thermal-neutron fluence of 10^{10} n/cm^2, the equivalent gamma-ray exposure ranges from 0.1 to 0.6 R.

Calcium fluoride doped with dysprosium is one of the most popular TL materials in use today. This material has a complex glow curve that is composed of six peaks. The commercial source of this material in the United States lists 180°C as the temperature of the main glow. As with the manganese-doped material, this phosphor has a density of 3.18 g/cm^3 and an effective Z of 16.3. Efficiency of the phosphor relative to LiF at ^{60}Co energies is 30 and the response ratio (30 keV to ^{60}Co energies) is $\sim$12.5. The material is usable over the exposure range 10 μR to 1,000,000 R and fading is reported as 10% during the first 24 hr and 16% (total) in the first 2 weeks. Usually, a postirradiation, preevaluation anneal at 100°C for 20 min will stabilize the material and eliminate further fading. However, fading must be considered when the dosimeter is used in long-term environmental-monitoring applications.

Thermal-neutron sensitivity of the commercially available phosphor has been reported to be in the range 0.5–0.7 R, equivalent gamma-ray exposure for a thermal-neutron fluence of 10^{10} n/cm^2.

As with calcium sulfate, the calcium fluoride materials are extremely light-sensitive, and users are cautioned about handling, use, and storage of the materials.

c. Lithium fluoride. Lithium fluoride was first studied as a TLD material in about 1950. It was studied in the form of pellets of pressed LiF powder because this form solved many of the problems associated with handling the powder. However, these studies were abandoned soon after they began, primarily due to problems encountered with the material. These difficulties were caused principally by a low-temperature glow peak at $\sim$120°C and the inability of standard techniques to eliminate the problem. Later, Cameron studied the crystals of lithium fluoride from which the pellets had been made. Working

closely with the Harshaw Chemical Co. (in Solon, Ohio), he was able to develop the TL grade lithium fluoride material activated with magnesium and titanium, called TLD-100.

LiF has received a great deal of attention due to its many advantageous characteristics. A survey of the literature on TLD investigations made several years ago indicated that approximately half of all the publications on TLD were concerned with LiF. The characteristics of LiF (primarily TLD-100) that sparked this great interest are

1. A nearly constant ("flat") energy response per unit exposure over a wide range of energies. In the previous discussion it was indicated that significant overresponses were observed for most TLD materials in the 30- to 40-keV energy range. For LiF, the response at 30 keV is only ~25% higher than that at ^{60}Co energies. In some cases, this overresponse can be reduced through the use of a suitable energy compensation shield.
2. An effective atomic number much closer to that of tissue. LiF has a density of 2.64 g/cm^3 and an effective Z of 8.2. Tissue is normally assumed to have an effective Z in the range of 7.4–7.6.
3. The light emitted by the main glow peak (190°C) shows little fading with storage time at room temperature. Cameron has reported the value of 5% per year but other investigators have reported fading of up to 15% within the first 3 weeks. Harshaw Chemical Co. recommends a postirradiation. preevaluation anneal of 100°C for ~10 min to stabilize the phosphor. If this treatment is used, the fading is reported to be negligible.

In addition to the preceding benefits, the phosphor is usable over a wide range of exposures, typically tens of mR up to ~300,000 R. However, these data are those quoted by the vendor, and others have reported a usable range extending only to ~700 R with saturation occurring before 100,000 R is reached. The lower limit of usefulness depends on controlling spurious effects (tribothermoluminescence, perhaps). Typically, TLD readers flow dry nitrogen gas into the heating/reading volume to reduce these effects. Under these conditions LiF can be used to measure exposures in the 10-mR range.

In addition to TLD-100, two other LiF phosphors are available for measuring exposures to neutrons. Of the three phosphors, TLD-100 has the natural, isotopic abundance of the lithium isotopes, ^{6}Li and ^{7}Li. The phosphor TLD-600 is highly enriched in ^{6}Li, and TLD-700 is made essentially from pure ^{7}Li.

The thermal-neutron cross section of ^{7}Li for the most likely reaction is only 0.033 b. This cross section is considered negligible when compared with the 945-b cross section for the (n, α) reaction in ^{6}Li. Thus, TLD-700 has essentially no response to thermal neutrons when it is compared with either TLD-600 or TLD-100. Either of these materials can be used in conjunction with TLD-700 for measurements in mixed thermal-neutron–gamma-ray fields. For example, TLD-600 will respond to both the thermal-neutron and the gamma-ray exposure whereas TLD-700 will respond only to the gamma-ray component of the radiation field. Subtraction of the dose indicated by the TLD-700 detector from the dose indicated by the TLD-600 detector gives the dose due to thermal neutrons.

Care must be exercised in the calibration and use of these detectors for measurements in mixed-radiation fields. For example, nine different values have been reported for the thermal-neutron sensitivity of the Harshaw TLD-100. Assuming an exposure to the standard thermal-neutron fluence of 10^{10} n/cm^2, the equivalent gamma-ray response ranged from 65 to 535 R. For TLD-600 the equivalent response for four measurements ranged from 870 to 2190 R. Even though TLD-700 contains only a trace amount of ^{6}Li, it is incorrect to assume the phosphor has no thermal-neutron sensitivity. Six values of an equivalent response have been reported in the literature, ranging from 0.7 to 2.5 R. However, it should be obvious that the wide difference in thermal-neutron sensitivity between TLD-600 and TLD-700 (when combined with the appropriate calibration) makes the technique useful for most monitoring situations.

d. Lithium borate. Another TL phosphor that has received much attention lately is lithium borate (or more properly lithium tetraborate). Usually manganese is added as the impurity to this material, but one commercial dosimetry system uses lithium borate doped with copper. Characteristics of the manganese system are described first because this element appears to be the most promising of the lithium-based phosphors. In addition, this phosphor exhibits many of the "ideal" dosimeter characteristics listed at the beginning of this section.

Lithium borate (TLD-800) has many characteristics that make it attractive as a radiation dosimeter. It is essentially tissue-equivalent (effective Z of 7.4) even though its density is ~2.4 g/cm^3. The phosphor compares favorably with the "standard" LiF. The low-temperature peak in the lithium borate curve decays very rapidly (these data were obtained 10 min after exposure), but the main glow peak at 200°C is relatively stable. Harshaw Chemical Co. quotes the fading at <5% in 3 months. Some researchers have reported that the main peak actually consists of more than one component and the prominent peak depends on the magnitude of the exposure. For example, for exposures of <1000 R, the peak appears at 180°C, whereas for exposures >1000 R (extending to ~1,000,000 R), the main peak appears at 210°C. This point is not particularly

important when an individual is considering exposures in the personnel-monitoring range. However, it serves to illustrate that information provided in sales literature may be a condensation of typical characteristics, and actual performance of a dosimetry system depends on the application. In addition, these results point out the necessity that those responsible for personnel monitoring using TLD badges be familiar with the characteristics of the materials used in the system.

The literature indicates that lithium borate ($Li_2B_4Q_7$) is not as sensitive to gamma-ray exposure as are other TLD materials. For example, the efficiency relative to LiF at ^{60}Co energies is only ~0.15. This limits the lower useful exposure range to ~50 mR. However, this reduced sensitivity allows use of the dosimeter for exposures >100,000 R. This lack of sensitivity is actually due to the design of the TLD readers and not entirely to the gamma-ray sensitivity of the lithium borate. The photomultiplier tubes used in standard readers are sensitive to light over a range best suited for LiF (i.e., 3500–6000 Å). The emission spectrum of $Li_2B_4Q_7$ is in the range 5300–6300 Å, where the standard photomultiplier tubes have reduced sensitivity.

Characteristics of the material are highly dependent on the concentration of the manganese impurity. Data on lithium borate indicate that the optimum manganese concentration is ~0.4%. For this concentration, the response per unit exposure is essentially energy-independent. Actually the response ratio 30 keV to ^{60}Co energies is 0.9 for a concentration of 0.4% manganese impurity. But this dosimeter has response characteristics that closely approximate the "ideal."

Lithium borate has some sensitivity to thermal neutrons. Again, if the material is exposed to the standard thermal-neutron fluence of 10^{10} n/cm^2, the equivalent gamma-ray response is in the range 230–390 R. This response is approximately the same as that of TLD-100. These data are for the material available commercially from Harshaw Chemical Co. Other investigators have reported equivalent gamma-ray responses ranging from 300 to 670 R.

e. Aluminum oxide. Aluminum oxide (Al_2O_3) has long been investigated for use as a TLD material for use in personnel dosimetry and for environmental measurements. Daniels' early investigations led him to believe that this material displayed more favorable TL characteristics than those of LiF. However, extensive research on the applicability of Al_2O_3 as a TLD was curtailed in 1960 when Cameron and the Harshaw Chemical Co. developed LiF TLD-100. Recently, an Al_2O_3 dosimeter has been introduced uses a carbon dopant (i.e., Al_2O_3 : C). These dosimeters exhibit an extremely high sensitivity to gamma radiation (about 60 times that of LiF TLD-100), which makes them useful for monitoring low-radiation exposures in the environment and to workers in controlled areas.

Aluminum oxide exhibits a sensitivity comparable to that of calcium sulfate doped with manganese ($CaSO_4$: Mn) but has many more desirable characteristics than the other high-sensitivity materials. Al_2O_3 : C has a Z_{eff} of 10.2 and exhibits a relatively flat energy response from 150 keV to 1.5 MeV. Data on the energy response at 30 keV relative to that at ^{60}Co energies has been determined to be in the range of 3. The relation of indicated exposure to actual exposure is linear from about 0.05 mrad to 100 rad and fading is quoted at 3% per year (under suitable conditions).

This phosphor has three glow peaks that occur at approximately 100°C, 185°C, and 250°C. The main glow peak at 185°C contains more than 99.5% of the TL signal emitted. The low temperature peak is extremely unstable and is not discernible 15 min after exposure to ionizing radiation. Nevertheless, a pre-read anneal at 100°C is recommended to ensure the removal of this low-temperature peak. The recommended readout cycle consists of raising the phosphor temperature to a maximum of 270°C at a rate of 10°C per second. As with other high-sensitivity phosphors, this material is extremely light-sensitive. Exposure to sunlight or normal laboratory light will cause the phosphor to lose almost 100% of the stored TL signal in less than 24 hr.

7. Beta Sensitivity of TLD Materials

All TLD materials in common use are sensitive to beta radiation. Theoretically, it would be possible to use TLDs for routine beta dosimetry. However, accurate assessment of beta-radiation absorbed dose is difficult to achieve with the personnel-monitoring devices currently available. Most of the conventional dosimeters were designed to detect the penetrating component of the radiation field and estimates of the nonpenetrating component radiation field and estimates of the nonpenetrating component are often obtained through the use of algorithms derived from calibrations in standard radiation fields.

The inability to perform accurate beta dosimetry can be attributed to a number of factors. These include the spectral energy distribution of the radiation, the low penetrating nature of the radiation, the wide energy range of beta-emitters encountered in the work environment, the influence of backscatter and attenuation in the badge components, and the lack of suitable calibration sources and techniques. An additional and very important factor is the steeply sloped energy-response curve exhibited by most TLD materials. For example, if the relative response per unit exposure of LiF TLD-100 to the 2.2-MeV beta particles from ^{90}Y is assumed to be 1.0, the response

is ~0.2 for beta radiation from ^{204}Tl (0.76 MeV) and ^{90}Sr (0.55 MeV). The decrease in response continues, reaching ~0.08 for ^{99}Tc (0.29 MeV) and ~0.04 for ^{35}S (0.17 MeV).

Within the last few years a number of personnel-monitoring badges have been designed that are intended to measure the beta component of the radiation field more accurately. These dosimeters are usually multielement (i.e., four or more TLDs) and require fairly sophisticated algorithms to obtain an estimate for the beta dose. Many attempts to produce an ultrathin TLD have been reported. Often, a TLD powder is mixed with a polyethylene base so that a thin but flexible dosimeter can be produced. At least one commercial badge has a thin (0.015-in.-thick) TLD incorporated in it strictly as a beta dosimeter. However, enclosing the dosimeter in some sort of badge or holder usually defeats the purpose of the beta dosimeter.

At this point, the development of TLD dosimeters specifically for use in beta-radiation fields has not progressed past these techniques described. Other, more sophisticated techniques are under study. These include the implantation of materials such as carbon into the crystal to alter its response and new reading techniques using lasers. However, it can be concluded that the errors associated with personnel beta-radiation monitoring may be quite large and improvements urgently needed.

8. Fast-Neutron Dosimetry with TLDs

As indicated above, neutron-radiation fields in and around nuclear power reactors are typically composed of neutrons with energies <500 keV. Therefore, detailed consideration of dosimetry for fast neutrons is not necessary since this is not a problem in light-water–moderated reactors. However, this discussion on a typical system is presented to illustrate the use of TLDs for fast-neutron dosimetry. The system chosen is the Hoy thermoluminescence neutron dosimeter (TLND). The TLND is an albedo-type detector using TLD-600 and TLD-700 chips embedded in a hemisphere of polyethylene.

Basically, an albedo dosimeter is designed to measure the fluence of thermal neutrons that escape from the body when an individual is exposed to fast neutrons. Fast neutrons incident on the body are moderated and scattered by the body and many escape as thermal neutrons. Detection of these thermal neutrons with a carefully calibrated dosimeter will provide a reasonable estimate of the incident fast-neutron dose (or dose equivalent). Typical albedo dosimeters use various combinations of TLDs, primarily TLD-600 and TLD-700 (see earlier discussion of lithium fluoride TLDs).

If the system is to function as an effective albedo-type dosimeter, the incident thermal-neutron component of the radiation field must be removed. This is normally accomplished by placing a material that captures thermal neutrons over the TLDs. Many different designs have been reported that use materials such as cadmium, polyethylene, and boron-loaded plastic.

The TLND badge was designed specifically to respond to albedo neutrons. Under most conditions, this component of the radiation field can be related to total fast-neutron exposure (badges are typically calibrated to give a neutron–dose-equvalent response). Albedo neutrons and associated gamma rays are detected by a pair of TLDs (TLD-600 and TLD-700) placed at the center of a moderating hemisphere of polyethylene (~2 in. in diameter). The hemisphere is covered by a 0.03-in.-thick cadmium dome to shield against incident thermal neutrons. Another pair of TLD chips, in a small compartment near the top of the dome, detects a portion of the incident radiation and provides a correction factor for overresponse of the dosimeter when it is exposed to low-energy neutron spectra. The badge components are enclosed in a protective stainless steel case in the shape of a 2-in.-diameter hemisphere. A belt is provided to ensure that the dosimeter is in close contact with the body (dosimeter response depends on this fact).

The Holy TLND is probably one of the largest of the albedo dosimeters and, because of its size and weight, is worn on a belt at the waist. However, because of the large amount of polyethylene used in the badge, it is one of the most sensitive albedo-neutron dosimeters in use. The dosimeter has exhibited characteristics far superior to those of nuclear emulsions for routine personnel-monitoring purposes. It can be used to measure in the dose-equivalent range 10 mrem to 50,000 rem with no observed rate dependence. In addition, the dosimeter is not affected by exposure to gamma radiation except when used to measure very low neutron doses.

The Hoy dosimeter has been studied extensively in a number of neutron-exposure situations. These neutron sources include plutonium sources thought to be representative of the production material at the Savannah River Plant (Aiken, South Carolina), several configurations using a ^{252}Cf source and moderators, a number of reactors, and accelerator-produced monoenergetic neutrons. For sources other than the accelerator-produced neutrons, and in situations in which the neutron spectrum is known, the neutron dose-equivalent indicated by the TLND is within a factor of 2 of the actual neutron dose equivalent. More specifically, for the majority of exposure situations, the indicated neutron dose equivalent was within 50% of the actual neutron dose equivalent.

Data obtained with monoenergetic neutron sources indicate that the dosimeter exhibits a marked under response for neutrons in the energy range 1–10 MeV. However, the

dosimeter response is relatively constant over this energy range at ~30% of the actual dose equivalent. At levels <1 MeV, there is a marked overresponse with decreasing neutron energy. This overresponse reaches a maximum of ~70% greater than the actual dose equivalent for neutrons of ~300 keV. These data indicate that scattered neutrons will produce an overresponse in the dosimeter that could lead to a significant overestimate of the neutron dose equivalent.

V. DOSIMETRIC TECHNIQUES, INTERNAL

A. Basis for Internal Dosimetry

The term *internal dosimetry* has always held a certain mystery about it that has confused and confounded health physicists for a long time. It is an unfortunate term that, historically, was intended to serve in contrast to the term *external dosimetry*. Generally, the term *external dosimetry* simply means the measurement of radiation exposure due to sources located outside the body. These sources of radiation, which are usually located in well-defined positions in an area, have the ability to penetrate into the body, depositing energy and potentially causing harm to the person being irradiated.

In general, the health physicist and radiation workers are more comfortable dealing with external sources of radiation exposure. If work is to be done in an area, the health physicist can make a radiation survey with portable instruments and obtain an estimate of the anticipated exposure from this survey. "Hot spots" or other areas with high-exposure rates can be identified; areas in which the dose rates are low can also be identified where workers can wait when not needed in a particular operation, and "stay times" for the work can be calculated, if necessary.

Most workers have become comfortable working in controlled areas where the radiation presents only an external hazard. In addition, workers are aware of the usual methods of controlling exposure to external radiation sources by using *time, distance*, and *shielding*, and the work can be performed with these methods in mind. These techniques are taught in all general employee-training courses for radiation workers. Use of stay times, low–dose-rate waiting areas, and temporary shielding are examples of how these techniques are practiced in keeping all exposures as low as is reasonably achievable (ALARA).

For some high-risk work, it may be necessary for the health physicist responsible for monitoring the work to control, as closely as possible, the exposure of the workers. This is usually accomplished through continuous monitoring of the work as it progresses. Nevertheless, the point remains the same; radiation workers enter radiation and high-radiation areas hundreds of times per day and usually give little thought to this type of exposure.

All workers entering the radiation area are required to wear personnel-monitoring devices, which give accurate estimates of the doses received. Many dosimeters can be used to monitor the radiation where the field varies significantly over the total body or to monitor certain parts of the body (e.g., the lens or the gonads). Some of these dosimeters can be evaluated almost immediately after the workers exit the area to provide estimates of the whole-body dose and the dose to other important parts of the body, for example, the extremities or the lens of the eye. These data can be used to evaluate the effectiveness of the radiation survey, control measures taken to keep exposures ALARA, and future job assignments of the individual workers.

If the potential for internal exposure is present, then the situation facing the health physicist, and the attitudes of the workers, is entirely different. It is still possible to perform prework surveys of the area to determine the potential hazard. However, these surveys are a different type. In this case, the health physicist must make measurements of airborne radioactivity concentrations. This requires drawing a known amount of air through a filter (or other collection device) and analyzing the sample to determine total ("gross") activity or to determine the radionuclides in the sample and their individual activities. In addition, surface-contamination surveys might be made to determine the potential for resuspension of other radioactive materials into the air. Although the work environment can be defined with some degree of confidence, exposure of the workers to radioactive materials that may be deposited internally is not so easy to predict. These measures of the potential internal exposure hazard cannot be correlated directly with the exposure the workers may receive.

Once the work has begun, use of the control methods—time, distance, and shielding—does not play an important role in preventing an internal exposure (although limiting the time in the area certainly reduces the probability of an internal exposure). In addition, if an internal exposure should occur, then the radiation protection staff and the individual worker have little control over the time the material remains in the body; distance is no longer a protective technique and neither is the use of temporary shielding. The radioactive material is inside the body, where almost all the radiation energy emitted in the decay of the radionuclide will be absorbed in tissues of the body.

Monitoring during the work is difficult and not very effective in predicting the accumulated exposure as the work proceeds. Local or area air-monitoring systems do not give a true indication of the concentrations of radioactive material in the breathing zones of individual workers. Personal air samplers may be used to obtain breathing

zone samples, but low flow rates, high-failure rates, and worker acceptance can be a problem. Also, care must be taken to ensure that these samplers do not interfere with the worker so that the actual exposure period (to external or internal radiation sources) is extended.

At the completion of the work, no direct measurement techniques are available to evaluate the exposure. Samples of mucus from the nasal passages may be taken (either through nasal swabs or blowing of the nose) to determine if radioactive material has deposited in the upper nasal passages. However, these samples must be obtained soon after exposure as the effectiveness of such samples in indicating an internal exposure is limited to a very short period after exposure (~15–30 min). Bioassay is the only other method available to evaluate an internal exposure. This term is used to include both the measurement of radioactive material in the body and the measurement of radioactive material excreted from the body. Bioassay is clearly an "after the fact" evaluation technique.

Therefore, the most effective method of controlling exposure to internally deposited radioactive material is to prevent the exposure. There are many methods to accomplish this goal and all of them are in use at most nuclear facilities. Simple restrictions such as controlling smoking, eating, and drinking in many areas can prevent the inadvertent intake of radioactive materials. On a larger scale, the first line of defense is containment of the radioactive material so that it cannot become airborne. Good housekeeping plays an important, but often overlooked, role in preventing material from becoming airborne and keeping exposures to such material ALARA. Engineering controls, that is, the design of equipment to move, exchange, filter, and clean air, are effective in keeping airborne concentrations low in most areas. When these methods are not effective, respiratory protective devices and protective clothing are used to prevent (or limit) exposure to airborne radioactive material.

If an internal exposure should occur, then internal dosimetry (the historical name) is not really the process that is followed. The term *dosimetry* literally means "dose measurement" and this is *not* possible when the radioactive material is inside the body. In keeping with traditional usage, the term *internal dosimetry* is used here, but it is defined as a process of measurement and calculation that results in an estimate of the dose- equivalent to tissues of the body due to the intake of radioactive material. The term *measurement* applies to bioassay techniques in which the quantity (activity) of radioactive material in the body is measured by using very sensitive radiation detectors located outside the body (called direct bioassay). It also applies to the measurement of the concentration of radioactive materials excecreted from the body, usually in the urine and feces (called indirect bioassay). These data are combined with a mathematical model that has been derived to explain the uptake, deposition, movement, metabolism, retention, and excretion of the particular element in the human body. This combination results in a series of "calculations" that produce "estimates" of the dose equivalent (over a specific period of time) to certain organs of the body from this intake of radioactive material.

From this short discussion it should be clear that internal dosimetry really means internal dose assessment. The sections that follow show just how these assessments are performed. The discussions that follow begin with the "old techniques" for internal exposure assessment (in use in the United States until January 1, 1994). These are presented in some detail in order to preserve the recent past. In addition, an understanding of the previous approach provides some insight into the more recent formulations for internal exposure assessment. This discussion is followed by a more detailed discussion of the current techniques used in the United States. Finally, a short discussion of the more recent recommendations of the ICRP is presented.

1. Internal Dose Control

The current concept of controlling internal exposure to radioactive materials in most nuclear facilities is based on limiting the concentrations of these materials in air and attempting to limit oral intake. In earlier recommendations, radionuclides were controlled by establishing maximum allowable concentrations in both air and water.

Inhalation and ingestion of radioactive material are considered to be the most likely pathways of entry into the body in the work situation. Usually, no consideration is given in the internal dosimetry regulations to accidents such as intakes through wounds (injection) or absorption of radioactive material through the intact skin. The development of this systematic set of concentration limits is based on a four-step process that forms the basis for the establishment of all radiation protection standards in current use. These steps are

1. Establish limits, which should not be exceeded, for radiation exposure, based on a careful review of available biological data.
2. Calculate the maximum allowable amount of each radionuclide (and its daughters) that can be in the body without exceeding the dose limits established in step 1.
3. Establish possible routes of entry into the body for each element (or radionuclide) and derive an allowable intake rate that will satisfy both steps 1 and 2.
4. On the basis of the physiological parameters established for the routes of entry (e.g., inhalation and ingestion), calculate the allowable concentrations of the

radionuclide in air or water that will satisfy steps 1, 2, and 3.

These steps have resulted in a terminology well-known in health physics, but the logical basis for the establishment of these terms has been lost. Recommendations of the ICRP and the NCRP published in 1959 gave each of these logical steps a name. The process taking place in step 1 is the establishment of the maximum permissible dose equivalent. In step 2, the maximum permissible body burden is calculated based on the maximum permissible dose equivalent, and in step 3 the maximum allowable intake has been established. The final step, and the one used daily to control exposure to radioactive materials for many years, is the establishment of the maximum permissible concentration values for a particular radionuclide. These four simple steps form the basis for all internal exposure recommendations and regulations in use throughout the world. More recently, the ICRP introduced a new approach to the assessment of internal exposure. However, although the terms have been changed (see Section V.B.2), the four basic steps presented above remain unchanged.

2. Regulatory Requirements

Until January 1, 1994, U.S. guidance and regulations related to external radiation exposure and the control of the internally deposited radionuclides were based on recommendations of the ICRP and the NCRP published between 1953 and 1969. Other publications on specific groups of radionuclides, for example, the alkaline earths and the actinides, were issued, but these had little impact on the federal regulations. The ICRP published more recent recommendations on a risk-based approach to radiation protection (in 1977), and completely revised the internal dosimetry scheme (1979), but these approaches took a long time to find their way into the federal regulations and radiation protection practice in the United States. Subsequently, the ICRP and the NCRP have published additional recommendations on radiation-exposure limits and the approaches to radiation protection. These newer recommendations have not yet been incorporated into federal guidance. Nevertheless, any consideration of internal dose assessment must begin with a discussion of the old ICRP and NCRP formulations, published originally in 1959. The following material establishes the foundation for these considerations.

3. Basic Definitions

Several definitions and a discussion of the concepts and assumptions embodied in the internal dosimetry recommendations are necessary before proceeding. These are presented below (definitions related to the newer publications of the ICRP are given in Section V.B.2. The following definitions are from ICRP Publication 2 (ICRP-2).

The *maximum permissible dose equivalent (MPDE)* for an individual is that dose, accumulated over a long period of time or resulting from a single exposure, which (in light of present knowledge) carries a negligible probability of severe somatic or genetic injuries. The ICRP expands this definition by stating, "Furthermore, it is such a dose that any effects that ensue more frequently are limited to those of a minor nature that would not be considered unacceptable by the exposed individual and by competent medical authorities." Even though the emphasis has been, and is today, placed on keeping all exposures as low as achievable, this definition of the MPDE has formed the foundation of the internal dosimetry guidance for many years.

The *critical body organ* is that organ of the body whose damage by radiation results in the greatest damage to the body. It should be noted that in most discussions, the ICRP simply calls this the critical organ. Actually, a number of factors must be considered in designating the critical organ(s) for use in internal dose calculations. The following are included in the selection criteria: (a) the organ that accumulates the greatest concentration of radioactive material; (b) the importance of the organ to the well-being of the entire body; (c) the radiosensitivity of the organ (i.e., the organ damaged by the lowest dose); and (d) the organ damaged by the route of entry of the radionuclide into the body. This consideration is particularly important for highly insoluble materials that have low transfer coefficients across barriers such as the lung and the lining of the gastrointestinal tract. In these cases, the *only* organ that may be damaged is the organ in which the material is contained or through which the material passes as it enters and exits the body.

Even though all these factors should play an important role in the selection of the critical organ, the primary factor usually is the organ that accumulates the greatest concentration of material, that is, criterion (a). But, the ICRP has not left the task of selecting the critical organ to the individual. In most cases, the ICRP has selected one or more critical organs for each element and, in some cases, up to 14 organs have been selected. In all cases, one of the critical organs selected is the total body. This critical organ is very useful when the health physicist is dealing with mixtures of radionuclides.

The *body burden* of a particular radionuclide in an individual is the activity of the radionuclide present in the individual's body at a particular time.

The *maximum permissible body burden (MPBB)* is the activity of a particular radionuclide that delivers an MPDE

to the whole body or to one or more organs of the body. The MPBB is computed on the assumption that the particular radionuclide is the only radionuclide in the body. According to the definitions, an exposure less than the MPBB is not thought to produce an observable biological change.

The *maximum permissible concentration (MPC)* for any radionuclide is that concentration of material, in air or water, for which continuous exposure may occur without exceeding the MPDE. Actually, the ICRP recommendations include two exposure situations. MPC values are given for a normal 40-hr work week (called occupational exposure) and for a 168-hr week (called continuous occupational exposure).

Publication 10 of the ICRP, issued in 1968, gave several additional definitions that were intended to clarify some of the problems with the understanding of ICRP-2. *Intake* is defined as the amount entering the body by nose or mouth; *uptake* as the amount absorbed into extracellular fluid; *deposition* as the amount present in the organ of reference; and *transportable* as the property of a radionuclide-containing compound that results in its ready transfer across body membranes.

For the purposes of this discussion, it is convenient to substitute the word *blood* for the term *extracellular fluid*. Although the term *blood* is not completely correct, it is simpler to think of the blood as the transport mechanism for radioactive material in the body; that is, the blood carries (transports) the material to the organs of the body in which it will deposit. The definition for *transportable* was suggested by the ICRP as a substitute for the earlier term *soluble*, which was used widely in ICRP-2. In this latter publication, materials were classed as soluble and insoluble. In this discussion these terms are used in keeping with the MPC values specified in the early ICRP and NCRP recommendations.

4. Internal Dosimetry Scheme

The internal dosimetry scheme given in Fig. 6 is essentially universal in its utility in explaining the factors that must be considered in establishing limits and protecting workers from exposure to internally deposited radionuclides. The primary concern is the absorbed dose (or dose equivalent) to organs or tissues of the body due to the intake of a radionuclide. This statement is true whether concentration limits are being derived or an actual exposure is being evaluated. The dose is normally obtained through a series of calculations, which rely on a large number of factors. These factors, shown at the bottom of the figure, include the dosimetric concepts discussed above, the radiological parameters associated with the particular radionuclide, and anatomical and physiological data necessary to describe the intake and deposition of the radionuclide in the body. These data must be coupled with dosimetric models and calculational techniques to derive an estimate of the dose from an intake of a particular radionuclide. The dosimetric models are specific for a particular element and describe mathematically the metabolism, retention, and excretion of the element.

It is important that this scheme be kept in mind in the sections that follow. In addition, there is one other simple fact that must be remembered for an individual to gain full appreciation for internal dosimetry. To determine the absorbed dose from the intake of a radionuclide, the health physicist must determine only two things: (1) the number

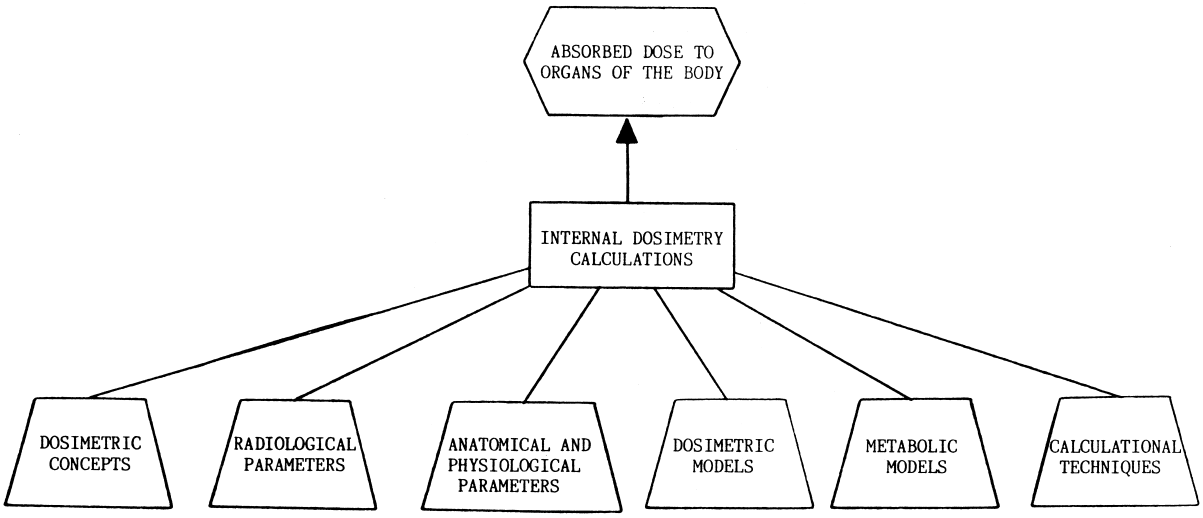

FIGURE 6 Internal dosimetry scheme.

of disintegrations of the radionuclide that take place in the organ over the time period of interest and (2) the energy per unit mass (i.e., per gram) deposited in the organ per disintegration of the radionuclide. Other factors, such as the names of quantities and their units and the quality factors chosen, may change, but this fundamental fact remains unaltered by the recommendations and regulations of national or international bodies.

a. Dosimetric concepts. The dosimetric concepts necessary for an internal dose calculation under the old system are those defined in Section V.A.3. These include the MPDE, MPBB, MPC, critical organ, and many others. These constitute the language used in performing these calculations. As will be seen, changes in this language do not cause any significant change in the techniques used in the calculation.

b. Radiological parameters. The radiological parameters are those that are associated with the radionuclide itself. The ICRP formulation assumes that only one radionuclide enters the body and that, at the time of intake, the radionuclide is "pure." That is, the assumption is always made that the radionuclide contains no radioactive daughter products at the time of intake. However, as we will see, the calculation includes the daughter(s) in an interesting way. The term *radiological parameters* includes the half-life of the radionuclide, types of radiation emitted in the decay, energies of these radiations, and frequency at which each of the radiations is emitted in the decay of the radionuclide. Other parameters include the quality factors associated with the radiations and the properties of any daughter radionuclides. If the radionuclide has a radioactive daughter(s), then the same parameters must be determined for each daughter in the decay chain. All of this information is found in a "decay scheme" for the radionuclide.

c. Anatomical and physiological data. Early in the history of internal dose calculations it was recognized that a need existed for a standard set of biological parameters that would be accepted for calculating permissible levels for radioactive materials. The first set of data was presented at a conference at Chalk River. Canada, in 1949. The data adopted at this conference included values for the mass of certain organs and data on the chemical composition of selected organs and of the total body. In addition, data on patterns of intake and excretion, water balance, respiration rates, and retention of particulate matter in the lung were accepted. The data were called Standard Man and were intended to represent the average occupationally exposed radiation worker. The Standard Man values were modified several times and additional data were included; for example, the rate of passage and the mass of the contents of the gastrointestinal tract were added in 1953. Data on Standard Man form the basis for the recommendations contained in ICRP-2. The mass and effective radius of organs in Standard Man are given in Table VI. Intake and excretion parameters for water and an "air balance" are shown in Table VII. These data are taken directly from ICRP Publication 2.

TABLE VI Organs of Standard Man Including Mass and the Effective Radius[a]

Organ or tissue	Mass, m (g)	% of total body	Effective radius, X (cm)
Total body[b]	70,000	100.0	30.0
Muscle	30,000	43.0	30.0
Skin and subcutaneous tissue[c]	6,100	8.7	0.1
Fat	10,000	14.0	20.0
Skeleton			
Without bone marrow	7,000	10.0	5.0
Red bone marrow	1,500	2.1	—
Yellow bone marrow	1,500	2.1	—
Blood	5,400	7.7	—
Gastrointestinal tract[b]	2,000	2.9	30.0
Contents of the gastrointestinal tract			
Lower large intestine	150	—	5.0
Stomach	250	—	10.0
Small intestine	1,100	—	30.0
Upper large intestine	135	—	5.0
Liver	1,700	2.4	10.0
Brain	1,500	2.1	15.0
Lungs (2)	1,000	1.4	10.0
Lymphoid tissue	700	1.0	—
Kidneys (2)	300	0.43	7.0
Heart	300	0.43	7.0
Spleen	150	0.21	7.0
Urinary bladder	150	0.21	—
Pancreas	70	0.10	5.0
Testes (2)	40	0.057	3.0
Thyroid gland	20	0.029	3.0
Thymus	10	0.014	—
Ovaries (2)	8	0.011	3.0

[a] Adapted from International Commission on Radiological Protection (1959). "Report of Committee II on Permissible Dose for Internal Radiation," ICRP Publication 2, Pergamon, Oxford.
[b] Does not include the contents of the gastrointestinal tract.
[c] The mass of the skin alone is taken to be 2000 g.

d. Dosimetric models. The primary models used in dose calculations are those associated with the lung and the gastrointestinal tract. Other models include situations such

TABLE VII Intake and Excretion of Standard Man[a]

Water balance			
Intake (cm^3/d)		**Excretion (cm^3/d)**	
Food	1000	Urine	1400
Fluids	1200	Sweat	600
Oxidation	300	From lungs	300
		Feces	200
Total	2500	Total	2500

Air balance			
	Oxygen (vol %)	**Carbon dioxide (vol %)**	**Nitrogen + others (vol %)**
Inspired air	20.94	0.03	79.03
Expired air	16.0	4.0	80.0
Alveolar air (inspired)	15.0	5.6	—
Alveolar air (expired)	14.0	6.0	—

Vital capacity of lungs	3–4 L (men)
	2–3 L (women)
Air inhaled during 8-hr workday	1.0 E + 7 cm^3/d
Air inhaled during 16-hr workday	1.0 E + 7 cm^3/d
Total	2.0 E + 7 cm^3/d
Interchange area of lungs	50 m^2
Area of upper respiratory tract, trachea, bronchi	20 m^2
Total surface area of respiratory tract	70 m^2
Total water in body	4.3 E + 4 g
Average life span of man	70 yr
Occupational exposure time of humans	8 hr/d; 40 hr/week; 50 weeks/yr; 50 yr total time

[a] Adapted from International Commission on Radiological Protection (1959). "Report of Committee II on Permissible Dose for Internal Radiation," ICRP Publication 2, Pergamon, Oxford.

as exposure in a cloud of a radioactive material or special exposure situations such as the deposition of a radionuclide in the skeleton. The distribution of inhaled material in Standard Man is shown in Table VIII and the model of the gastrointestinal tract is summarized in Table IX. These models will form the basis for the old ICRP internal dose calculations.

e. Metabolic models. Each element that enters the body is transported, deposited, retained, and excreted in a manner that can be described by a set of mathematical equations. In the current ICRP scheme these equations generally have the form of an exponential equation. That is, the retention and excretion of an element in the body can be "modeled" by using equations that have a similar form to those very familiar equations used in radioactive decay.

f. Calculation techniques. The last entry in this internal dosimetry scheme is included to serve as a reminder that a series of calculations must be made in any internal dose assessment. In the old ICRP recommendations these calculations were relatively simple and did not require a computer. However, any discussion of the newer internal dosimetry techniques shows that the methods are more sophisticated, and for some of the calculations very complex computer codes are required.

B. Generally Accepted Techniques

1. The ICRP Publication 2 Formulation (A Review)

The techniques of the ICRP-2 formulation and the limits derived from their use are based on a very old system proposed originally in 1959. The system establishes limits for the dose-equivalent rates to organs of the body (or

TABLE VIII Particulates in the Respiratory System of Standard Man[a]

Distribution[b]	Readily soluble compounds (%)	Other compounds[c] (%)
Exhaled	25	25
Deposited in upper respiratory, passages and subsequently swallowed	50	50
Deposited in lungs lower (respiratory passages)	25	25[d]

[a] Adapted from International Commission on Radiological Protection (1959). "Report of Committee II on Permissible Dose for Internal Radiation," ICRP Publication 2, Pergamon, Oxford.

[b] Retention of particulate matter in the lungs depends on many factors, such as the size, shape, and density of particles; the chemical form; and whether the person is a mouth-breather; however, when specific data are lacking it is assumed that the distribution is as shown here.

[c] In the tables of MPC values, these compounds are called insoluble.

[d] Of this, half is eliminated from the lungs and swallowed in the first 24 hr, which makes a total of 62.5% swallowed. The remaining 12.5% is retained in the lungs with a half-life of 120 d, it being assumed that this portion is taken into body fluids.

the total body), and allowable concentrations of radionuclides in the organ(s) are calculated based on these limits. To control exposure to a radionuclide that may be deposited in the body, the health physicist must calculate concentrations in air and water such that, assuming standard inhalation and ingestion rates, the allowable organ concentration (and, therefore, the dose-equivalent rate) is not exceeded.

This discussion focuses on the ICRP recommendations rather than the NCRP recommendations contained in Handbook 69. These recommendations are nearly identical and the differences insignificant. The adoption of NCRP recommendations by the Atomic Energy Commission, and later its successor, the NRC, in 10CFR20 was essentially an adoption of the ICRP recommendations on an internal exposure control.

TABLE IX Gastrointestinal Tract of Standard Man[a]

Portion of the gastrointestinal tract that is critical tissue	Mass of contents (g)	Time food remains (d)	Fraction from lung to tract	
			Soluble	Insoluble
Stomach (S)	250	1/24	0.50	0.625
Small intestine (SI)	1100	4/24	0.50	0.625
Upper large intestine (ULI)	135	8/24	0.50	0.625
Lower large intestine (LLI)	155	18/24	0.50	0.625

[a] Adapted from International Commission on Radiological Protection (1959). "Report of Committee II on Permissible Dose for Internal Radiation," ICRP Publication 2, Pergamon, Oxford.

a. Radiation exposure standards. Limits on radiation exposure recommended by the ICRP in Publication 2 are different from those found in the old 10CFR20. However, since these form the basis for the calculation of the MPBB, the ICRP recommendations must be discussed here. This section concentrates on the recommended limits for occupational exposure; those recommendations appropriate to the general population are mentioned briefly in this section.

i. Occupational exposure. The ICRP recommended a limit for the total body and gonands of 3 rem in any 13 consecutive weeks with the total exposure not to exceed $5(N - 18)$ rem if the exposure begins at age 18 yr. If the exposure begins before age 18, occupational exposure must not exceed 5 rem/yr and should not exceed a total of 60 rem at age 30.

The dose equivalent to the skeleton is based on a knowledge of the dose to the skelton from ^{226}Ra. The ICRP recommends that in any 13 consecutive weeks this dose should not exceed the dose due to the deposition in the skeleton of 1 μCi of ^{226}Ra. The dose-equivalent rate from this amount of ^{226}Ra is 0.56 rem/week.

The thyroid gland and the skin had a dose-equivalent limit of 8 rem in any 13 consecutive weeks, not to exceed 30 rem/yr.

For any single organ, except the gonads, skeleton, skin, and thyroid, the dose equivalent should not exceed 4 rem in any 13-week period and should not exceed 15 rem/yr.

ii. External versus internal exposure. These limits apply to both external and internal exposure. In other words, the ICRP recommended that radiation exposure to both external and internal sources conform to these limits: external and internal exposure should be added and the total dose equivalent should not exceed these limits. In addition, the following guidelines are given by the ICRP to be used if both external and internal exposure occur.

If no external exposure has occurred, then the appropriate MPC value may be used to control internal radiation exposure. If a combined exposure has occured (i.e., both external and internal), then the appropriate MPC value must be modified by the factor $(D - E)/D$, where D is the quarterly dose-equivalent limit for the organ and E is the dose equivalent due to external exposure.

If exposure to an airborne radionuclide lasted for only 1 hr, then the appropriate MPC value for occupational exposure may be increased by a factor of 40. The same applies to a radionuclide in water, but this situation is not discussed further here because this intake pathway is very unlikely in an occupational exposure situation. It should be remembered that the rules on concurrent exposure still apply, and the allowable MPC value may require modification so that permissible exposure limits are not exceeded.

In special situations, especially those in which sufficient monitoring was available, the recommendations allowed a person to work for 1 hr in an area in which the concentration in air of a radionuclide (with the total body as the critical organ) exceeded the 40-hr MPC value by a factor of 1200 (i.e., $40 \times 13 \times \frac{12}{5} = 1200$). This factor was determined on the assumption that the $5(N - 18)$ formula had not been exceeded.In addition, if such an exposure had been allowed, no additional exposure would have been permitted during the remainder of the 13-week period.

b. Assumptions, restrictions, and explanations. Values of MPBB and MPC were based on a number of assumptions. In addition, these data had certain restrictions placed on them that influenced their interpretation and use in controlling exposure to internally deposited radionuclides. These assumptions and restrictions are presented and discussed in this section.

ICRP-2 presented MPBB and MPC data for approximately 240 radionuclides. These data were given for soluble and relatively insoluble compounds, and no consideration was given to the chemical structure of the compound. In other words, these inexact terms were used in place of the more conventional descriptions, such as oxides and hydroxides, that might have been expected when exposure to airborne radionuclides is discussed. In addition, ingestion and inhalation were considered as the only pathways into the body. Injection through wounds and absorption through the intact skin were not considered in the recommendations. In several situations, exposure by submersion in a radioactive cloud was considered, where important.

All the calculations assumed a standard worker (i.e., Standard Man); individual variations were not considered. These individual variations, in reality, could have had a significant impact on the evaluation of an exposure, but the ICRP had no other choice but to ignore them.

Below is a list of the other principal features, assumptions, and conditions placed on the MPBB and MPC calculations.

1. In all cases, values are given for both soluble and insoluble compounds of the radionuclide. Usually, a number of critical organs are listed as well as the total body.

2. The values are computed for occupational exposure at the rate of 40 hr/week, 50 weeks/yr for a continuous working period of 50 yr. In addition, a 50-yr continuous exposure period (i.e., 168 hr/week) is also considered.

3. The calculated dose rate takes into account the amount of radionuclide actually present in the critical organ (or the body) rather than an assumed equilibrium value. MPC values based on the critical organ must meet the requirement that the dose rate (rem/week) after 50 yr of occupational exposure must not exceed the limits specified by the ICRP. Because of the short effective half-lives of most radionuclides in the body, a majority will reach a state of equilibrium in the body during a 50-yr exposure period. Most radionuclides that did not satisfy this statement were assigned a biological half-life of 200 yr.

4. If the radionuclide has a radioactive daughter, the calculation assumes that only the parent radionuclide enters the body. That is, it is always assumed that the exposure is to a "pure" radionuclide. Certainly this is not a realistic assumption for most exposure situations. However, the estimated dose rate from the radionuclide does include a consideration of the energy released by daughter radionuclides formed inside the body. Two exceptions to this general statement are the radionuclides ^{220}Rn and ^{222}Rn. For these radionuclides, a state of equilibrium usually attained in air is assumed.

5. A compartment model is assumed for use in the calculations. In this model each organ is assigned a biological half-life, and elimination of the radionuclide from the organ is assumed to occur at a constant rate. In general, this model is assumed to be a single compartment described by a single exponential function. Values used in the equations are selected to produce, *in 50 yr of constant level exposure*, the radionuclide retention indicated by a more detailed model. The ICRP cautions that these models should be used with great care when exposures of shorter duration are considered because they may not accurately represent the actual situation.

For exposures >50 yr, the dose rate in the critical organ must not exceed the permissible levels set by the ICRP. However, if the radionuclide has not reached equilibrium in the organ during the 50-yr period, the dose rate will continue to increase.

6. The average breathing rate of Standard Man was 1×10^7 cm^3 per 8-hr workday. This value was assumed to be one-half the amount of air breathed in 24 h (i.e., 2×10^7 cm^3).

7. The average rate of water consumption was 1100 cm^3 per 8-hr workday. This was assumed to be one-half the water consumed in a 24-h period (i.e., 2200 cm^3)

8. The dose from submersion in a cloud of inert gas, with radiation of sufficient energy to penetrate the epidermal layer (7 mg/cm^2), results from an external exposure in the cloud and not from exposure due to the inhalation of the radioactive gas into the body. Only two critical organs are considered for submersion in a cloud of noble or inert gas. These are the skin (nonpenetrating radiation) and the total body (penetrating radiation). Again, the radons are exceptions to this general assumption. In this latter case, the lung is considered the critical organ.

9. In general, the ICRP calculations do not consider the chemical toxicity of the element in establishing the MPBB or MPC values. The exception to this rule is the element uranium. In the case of uranium, chemical toxicity was considered (the kidneys are the critical organ), and it was the limiting criterion for certain of the long-lived isotopes of uranium.

These features are the stated assumptions used in the calculations of MPBB and MPC values. However, other assumptions embodied in this technique are often unclear or are lost in the discussion of the equations. Before proceeding, these assumptions must be presented.

Radioactive material inhaled or ingested by a worker is assumed to be either soluble or insoluble. If soluble material is inhaled, then the amount deposited in the lung (lower respiratory passages) is assumed to go directly into the blood and, subsequently, to be deposited in one or more organs of the body. The important point is that a dose to the lungs is not considered. Soluble material deposited in the gastrointestinal tract may also enter the blood across the lining of this tract. The model assumes that this transfer occurs only in the small intestine. Again, any material entering the blood through the gastrointestinal tract may be deposited in one or more organs of the body. Unless all the material deposited in the tract enters the body, the sections of the tract may be critical organs.

Radioactive material deposited in an organ is assumed to be uniformly distributed throughout the entire organ. The dose calculation proceeds by calculating the dose to the organ from radioactive material contained in the organ. If the radioactive material decays by emitting alpha or beta radiation, then it is assumed that all this energy is deposited in the organ containing the radioactive material. If the decay involves the emission of gamma radiation, a correction is applied to account for that portion of the energy escaping the organ. Only the energy deposited in the critical organ is considered. No consideration is given to the ultimate deposition of the radiation escaping the single critical organ.

If the material is insoluble, it is assumed that there is no transfer of material to the blood in either the lung or the gastrointestinal tract. In this case, the number of critical organs are limited to the lung and the four sections of the tract.

i. Calculation of maximum permissible exposure values. A calculation of maximum permissible exposure values (specifically MPC values) begins with establishing the MPBB for a particular radionuclide. This calculation can proceed along two paths depending on the nature of the particular radionuclide. For bone-seeking radionuclides that primarily emit alpha and beta radiation, the MPBB is based on a comparison with ^{226}Ra. For other radionuclides, the MPBB is determined by establishing the activity of the radionuclide that can be present without exceeding the permissible weekly dose-equivalent rate for the critical organ.

ii. Body burden based on comparison with ^{226}Ra. This method is the result of a calculation that attempts to determine (1) the amount of a radionuclide deposited in bone that will deliver the same effective dose equivalent as delivered by the deposition of 1 μCi of ^{226}Ra and its daughter products, and (2) the amount of a radionuclide deposited in bone that will result in damage comparable to that observed from known deposits of ^{226}Ra in bone. At the time these recommendations were formulated, there was an extensive body of knowledge regarding ^{226}Ra; this information was used to establish limits for other radionuclides depositing in bone.

Thus, the first method used to establish the MPBB is based on a comparison with ^{226}Ra and is applicable only to alpha- and beta-emitting radionuclides that deposit in bone (i.e., in the skeleton). To simplify the equations, the symbol q is used for the MPBB in the equations that follow. The MPBB for a radionuclide deposited in bone is given by

$$q = \frac{q' \times f(2)'}{f(2)} \times \frac{\varepsilon'}{\varepsilon}, \tag{1}$$

where

q = the MPBB for the radionuclide of interest.
q' = the MPBB for ^{226} Ra, 0.1 μ Ci.
$f(2)$ = the fraction of the radionuclide in the critical organ (i.e., skelton) of that in the total body.
$f(2)'$ = for ^{226} Ra, f(2) = 0.99.
ε = effective absorbed energy per disintegration of the radionuclide.
ε' = for ^{226} Ra, the effective absorbed energy is 110 MeV per disintegration.

Substituting these values into the equation gives

$$q = \frac{0.1(0.99)}{f(2)} \times \frac{110}{\varepsilon}$$
$$q = \frac{11}{f(2)\varepsilon}. \tag{2}$$

iii. Body burden based on dose-equivalent rate to a critical organ. In general, for radionuclides that do not distribute in the bone, there is a lack of specific information that can be used to set acceptable body burdens. For this reason, MPBB values are calculated under the assumption that the MPBB is the amount of a radionuclide, distributed throughout the body, that will result in the maximum permissible dose-equivalent rate

to the critical organ. The equation to be used is derived as follows. Let R be the permissible dose-equivalent rate, usually in rem/week, to a critical organ or the total body. Then,

$$R \propto \frac{q \times f(2) \times \varepsilon}{m}, \tag{3}$$

or

$$R = k \times \frac{q \times f(2) \times \varepsilon}{m}, \tag{4}$$

where

k = a constant to be evaluated later.
q = MPBB.
$f(2)$ = the fraction of the radionuclide in the critical organ of that in the total body.
ε = the effective absorbed energy per disintegration.
m = the mass of the target organ.

Before the constant k is evaluated, the equation should be examined in more detail. First, note that it specifies the dose-equivalent rate in an organ; that is, R has units of rem/week. Second, notice that the right side of the equation has the basic components mentioned earlier for calculating dose. The product of q and $f(2)$ gives the activity present in the critical organ; that is, $qf(2)$ is the disintegration rate of the radionuclide in the critical organ. If the disintegration rate is known, then dose rate is simply the product of the disintegration rate and the energy deposited in the critical organ per disintegration per gram of the critical organ. The quotient of ε by m gives the absorbed energy per disintegration of the radionuclide per unit mass of the critical organ. Thus, the equation can be put in any acceptable units of absorbed dose or dose equivalent if the proper conversion factors are collected in the proportionality constant.

The units of each component of the equation are as follows:

q is in microcuries
$f(2)$ is a fraction and has no units
ε is in units of MeV/disintegration
m is in units of grams

Thus, the constant required must bring all the units together such that the resultant is in units of dose-equivalent rate (i.e., in units of rem/week). In this case the constant has a value of 358. The equation becomes

$$R = \frac{358 \times q \times f(2) \times \varepsilon}{m}. \tag{5}$$

But the object of this exercise was to derive an equation to be used to calculate the MPBB. Thus, solving for q gives

$$q = \frac{m \times R}{358 \times f(2) \times \varepsilon}, \tag{6}$$

or

$$q = 2.8 \times 10^{-3} \frac{m \times R}{f(2) \times \varepsilon}. \tag{7}$$

The MPBB for any organ can be calculated by substituting the appropriate values for the parameters and establishing the permissible dose-equivalent rate for the critical organ. For example, suppose the critical organ is the liver. This organ is not listed specifically in the ICRP limits so the limit for "other organs" (15 rem/yr) is applied for the calculation. The permissible dose-equivalent rate is 0.3 rem/week (it is always assumed that there are 50 working weeks in a year). Substituting this value into the equation gives

$$q = 2.8 \times 10^{-3} \frac{m \times 0.3}{f(2) \times \varepsilon}, \tag{8}$$

or

$$q = 8.4 \times 10^{-4} \frac{m}{f(2) \times \varepsilon}. \tag{9}$$

iv. MPCs in air and water. The next step in the process is to calculate MPC values for air and water for use in controlling exposure to internally deposited radionuclides. This section gives the equations to be used to calculate MPCs for all organs of the body except the gastrointestinal tract. It is assumed that radioactive material is taken into the body at a constant rate of $P\mu$Ci/d and that biological elimination from the critical organ follows a simple exponential relationship. Under these assumptions, the rate of change of radioactive material in the critical organ can be expressed easily in a word equation:

$$\begin{bmatrix}\text{rate of change}\\ \text{of material in}\\ \text{critical organ}\end{bmatrix} = \begin{bmatrix}\text{rate of intake}\\ \text{of material into}\\ \text{critical organ}\end{bmatrix} - \begin{bmatrix}\text{rate of loss}\\ \text{of material from}\\ \text{critical organ}\end{bmatrix}.$$

Replacing the words with the appropriate symbols gives

$$\frac{d(qf(2))}{dt} = P - \lambda_e(qf(2)). \tag{10}$$

In this equation, λ_e is the effective decay constant. The solution with $qf(2) = 0$ when $t = 0$ is

$$qf(2) = \frac{P}{\lambda_e}(1 - \exp(-\lambda_e t)). \tag{11}$$

Note that q is the "allowed activity" (or the MPBB) of radioactive material in the body and that $qf(2)$ is the allowed

activity in the critical organ (i.e., the maximum permissible organ burden, MPOB). Thus, P must be the allowed intake rate. Solving for P gives

$$P = \frac{\lambda_e q f(2)}{(1 - \exp(\lambda_e t))}. \quad (12)$$

Remembering that $\lambda_e = 0.693/T$ (where T is the effective half-life) and rewriting to eliminate the decay constant yields

$$P = \frac{0.693(qf(2))}{T(1 - \exp(-0.693\,t/T))}. \quad (13)$$

The allowable intake rate is the product of three factors:

$$P = S \times C \times f,$$

where

$S =$ the rate of intake of either air or water in cm^3/d.
$C =$ the concentration of radioactive material in either air or water in $\mu Ci/cm^3$.
$f =$ the fraction of the material that reaches the critical organ by either inhalation or ingestion.

Substituting for P in Eq. (13) gives

$$S \times C \times f = \frac{0.693(qf(2))}{T(1 - \exp(-0.693\,t/T))}. \quad (14)$$

The maximum allowed rate of intake occurs when the concentration of the radioactive material is at a maximum. This is true because the inhalation and ingestion parameters of Standard Man (i.e., S) are constant and therefore do not change. In addition, f, the fraction of material inhaled or ingested that reaches the critical organ, is assumed to be constant for each particular element. The only variable in the equation is the concentration of the radioactive material in air or water (i.e., C). In other words, if the allowable rate of intake is to be controlled, this equation indicates that the concentration of the radioactive material must be controlled in either air or water. Therefore, we can substitute into this equation a term called the maximum allowable concentration, in effect, the MPC. This done, we arrive at a general equation for the MPC of radioactive material such that the maximum allowable intake is not exceeded and, more important, the maximum permissible dose-equivalent rate in the critical organ is not exceeded. The general equation has the form

$$\mathrm{MPC} = \frac{0.693(qf(2))}{S \times f \times T(1 - \exp(1 - 0.693\,t/T))}. \quad (15)$$

In this equation t and T are expressed in days, and t is the time period of exposure (that is always 50 yr expressed in days).

These equations can be solved for the MPC in air or water by substituting the proper values for S and f. For air, these parameters are designated as S_a and f_a and, for water, they are S_w and f_w. Actually, there are two values for S_a and two values for S_w (see Section V.B. 1). For air, the parameters are

$$S_a = 6.9 \times 10^6 cm^3/d \text{ (occupational exposure)}$$

and

$$S_a = 2.0 \times 10^7 cm^3/d \text{ (continuous occupational exposure).}$$

The parameter f_a is specific to the particular element and is called the fraction inhaled that reaches the critical organ. The first value of f_a given here does not agree with the values given earlier for the assumed inhalation rate. The ICRP modified this value to provide for the fact that an occupational worker spends only 5 of 7 days per week and 50 of 52 weeks per year on the job. Thus, $(1 \times 10^7\,cm^3/d) \times (5/7) \times (50/52) = 6.9 \times 10^6\,cm^3/d$. The MPC equations for inhalation become

$$\mathrm{MPC_a} = \frac{1.0 \times 10^{-7}(qf(2))}{f_a \times T(1 - \exp(-0.693t/T))} \quad (16)$$

for occupational exposure, and

$$\mathrm{MPC_a} = \frac{3.5 \times 10^{-8}(qf(2))}{f_a \times T(1 - \exp(-0.693t/T))} \quad (17)$$

for continuous occupational exposure.

For ingestion, the equations are

$$\mathrm{MPC_w} = \frac{9.2 \times 10^{-4}(qf(2))}{f_w \times T(1 - \exp(-0.693t/T))} \quad (18)$$

for occupational exposure, and

$$\mathrm{MPC_w} = \frac{3.2 \times 10^{-4}(qf(2))}{f_w \times T(1 - \exp(-0.693t/T))} \quad (19)$$

for continuous occupational exposure. In these last two equations, S_w has the following values:

$$S_w = 750\ cm^3/d \quad \text{(occupational exposure)}$$

and

$$S_w = 2200\ cm^3/d \text{ (continuous occupational exposure).}$$

Note that f_w is the fraction ingested that reaches the critical organ and that t and T are expressed in days. The first value of S_w has been modified as described above.

This discussion presents the general equations used for calculation of MPC values under the ICRP-2 system.

Several special cases exist, for example, for the gastrointestinal tract and for exposure to semi-infinite clouds of noble gases. However, these are not discussed here.

2. ICRP Publication 26

The recommendations contained in ICRP-26 were the first real pronouncements of the Commission on radiation protection since the early 1960s. Recommendations were made in a number of areas including protection from external and internal radiation sources, exposures of population groups, exposure of pregnant women, and planned special exposures. This discussion focuses primarily on those recommendations and techniques that have an impact on methods to be used for internal dosimetry.

First, the ICRP restated the objectives of radiation protection that formed the basis for the new dose-limitation system they proposed. These objectives were

1. No practice should be adopted unless it provides a positive net benefit.
2. All exposures should be kept as low as reasonably achievable, economic and social factors being taken into account.
3. The dose equivalent to individuals should not exceed the limits recommended for the appropriate circumstances by the Commission.

The first statement reflects the Commission's commitment to the benefit–risk philosophy and the second states the ALARA philosophy adopted much later. In all situations, the Commission warns that their recommended limits should not be exceeded.

The Commission also provided several new concepts that must be defined and explained if these recommendations are to be understood and used effectively. The most significant change in the new recommendations is the introduction of the terms *stochastic* and *nonstochastic* effects of radiation. *Stochastic effects* are those for which the probability, rather than the severity, of an effect occuring is regarded as a function of dose without threshold. *Nonstochastic effects* are those for which the severity of the effect varies with the dose, and for which a threshold may therefore occur.

Some somatic effects of radiation are considered to be stochastic. The most important of these effects is carcinogenesis, and it is considered to be the chief somatic risk of radiation exposure at low doses (i.e., at the doses encountered in radiation protection). For this reason, cancer is the main concern when stochastic effects of radiation are being considered. The Commission states that, for the dose range involved in radiation protection, hereditary effects of radiation are also considered to be stochastic.

It is tempting to substitute the words *linear* and *threshold* effects of radiation for the terms just defined. However, the definition of stochastic effects is slightly different from the concept of a linear dose response curve because of the word *probability*. In addition, the ICRP includes certain effects of radiation in the two categories that may not have been included previously. For example, nonstochastic effects include cataracts of the lens of the eyes, nonmalignant damage to the skin, cell depletion in the bone marrow causing certain blood deficiencies, and gonadal cell damage leading to impairment of fertility. In a recent review, Upton identified a large number of nonstochastic effects of radiation. This review included estimates of the threshold doses for nonstochastic effects in >30 tissues of the adult.

Thus, the goals of radiation protection are to prevent the detrimental nonstochastic effects of radiation exposure and to limit the probability of stochastic effects to levels deemed "acceptable." Prevention of nonstochastic effects can be achieved if the dose-equivalent limits are selected such that a threshold is never reached. The ICRP goal was to select a level such that a threshold could not be reached even if the exposure lasted for an entire lifetime. The limitation on stochastic effects was selected based on a consideration of the benefit–risk relation with the ALARA philosophy in mind.

In addition, the limit on stochastic effects was selected by comparing the risks of occupationally exposed workers to those of workers in other "safe" industries. That is, the limit was selected such that the risk of producing a fatal cancer per unit exposure was essentially equivalent to the risk of an occupationally related death in other industries.

The Commission also formally defined the term *committed dose equivalent*, even though this term is in common use in many segments of the nuclear industry. *Committed dose equivalent* is the dose equivalent to a given organ or tissue that will be accumulated over a period of 50 yr, representing a working lifetime, after a single intake of radioactive material into the body. Mathematically, the committed dose equivalent is defined by

$$H_{50,\mathrm{T}} = \int_{t}^{t+50y} H(t)\,dt, \tag{20}$$

where $H(t)$ is the relevant dose-equivalent rate and t is the time of intake. The ICRP states that this quantity may be considered a special case of the dose-equivalent commitment, but this distinction is not particularly important to this discussion of internal dosimetry.

The ICRP recommended a dose-equivalent limit for stochastic effects based on the total risk of all tissues irradiated. A single dose-equivalent limit is set for uniform irradiation of the whole body and a dose-limitation system is established to ensure that the total risk from irradiation

of parts of the body does not exceed that from uniform irradiation of the whole body. In addition, no single tissue should be irradiated in excess of the dose-equivalent limit set to prevent nonstochastic damage.

Thus, for stochastic effects of radiation, the dose-limitation system is based on the principle that the risk should be equal whether the whole body is being irradiated uniformly or whether there is nonuniform irradiation. The ICRP concludes that this condition will be met if

$$\sum_{\mathrm{T}} w_{\mathrm{T}} H_T \leq H_{\mathrm{WB,L}}, \tag{21}$$

where

w_{T} = a weighting factor representing the proportion of the stochastic risk resulting from irradiation of tissue (T) to the total risk, when the whole body is irradiated uniformly.
H_{T} = the annual dose equivalent in tissue T.
$H_{\mathrm{WB,L}}$ = the recommended annual dose-equivalent limit for uniform irradiation of the whole body.

Later, at their 1978 meeting, the ICRP decided to call the quantity on the left side of Eq. (21) the *effective dose equivalent*. Thus,

$$H_{\mathrm{E}} = \sum_{\mathrm{T}} w_{\mathrm{T}} H_{\mathrm{T}}. \tag{22}$$

These conditions stated will be met, in the opinion of the ICRP, if the limits on radiation exposure are the following:

Stochastic effects are 5 rem/yr for uniform irradiation of the whole body, that is, 0.05 Sv/yr under the new SI system of units. The ICRP recommendations are written using only the new units.

Nonstochastic effects are 50 rem/yr (0.5 Sv/yr) to all tissues except the lens of the eye. The lens was finally assigned a limit of 15 rem/yr (0.15 Sv/yr), but some of the early publications contained the value of 30 rem/yr (0.30 Sv/yr). To accommodate the use of the concept of effective dose equivalent into the new scheme for internal dose assessment and for establishing secondary limits for use in controlling the work area, the ICRP found it necessary to define another term. This term is called the *committed effective dose equivalent* (later given the symbol $H_{\mathrm{E,50}}$); that is,

$$H_{\mathrm{E,50}} = \sum_{\mathrm{T}} w_{\mathrm{T}} H_{\mathrm{T,50}}.$$

This concept requires that the committed dose equivalent (see Eq. (20)) be calculated for each organ or tissue in the body that is significantly irradiated. Then, the committed effective dose equivalent is obtained by multiplying each of these values by the respective stochastic tissue weighting factor (called the weighted committed dose equivalent) and summing over all the organs and tissues.

a. Tissues at risk. The internal dosimetry system described in ICRP-2 introduced the concept of a critical organ, and all the calculations of MPBB and MPC were made under the assumption that there was a need to control the dose-equivalent rate to this critical organ to the limit set by the ICRP (i.e., the MPDE). The new ICRP concept takes into account the total risk that can be attributed to the exposure of all tissues irradiated. If this concept is to be implemented, then it is necessary to specify the organs and tissues of the body that should be considered at risk and to establish some measure of this risk.

The most visible change in the new ICRP recommendations is that the critical organ concept has been discarded. This change was necessary because the concept of a single critical organ did not fit into the scheme of specifying an effective dose equivalent (H_{E}) relative to a uniform whole body irradiation. This scheme requires that the committed effective dose equivalent be the sum of the weighted committed dose equivalent ($w_{\mathrm{T}} H_{\mathrm{T,50}}$) to each organ in the body, each with a specific sensitivity to radiation effects. This sensitivity is given by the weighting factor shown in Eqs. (21) and (22).

The description of tissues at risk that follows is used to derive the weighting factors needed to calculate the effective dose equivalent. The derivation of risk factors is based on an average risk to a particular tissue from irradiation. No consideration is given to the effects of age-dependent or sex-dependent differences. The tissues considered and the risk factors derived are based on (1) a review of the suceptibility of the tissue to radiation damage, (2) a review of the seriousness of this radiation-induced damage, and (3) a consideration of the extent to which this damage is treatable. In addition, only the likelihood of inducing fatal malignant disease, nonstochastic changes, or substantial genetic defects is considered.

i. Gonads. Irradiation of the gonads can cause effects in three different ways. First, there is the probability of tumor induction. However, the gonads appear to have a low sensitivity to radiation and no carcinogenic effects have been documented. Impairment of fertility is also a possible effect but such an effect is clearly age-dependent. Again, the ICRP did not consider this an important radiation effect. The major effect considered for irradiation of the gonads is the production of hereditary effects over the first two generations. On the basis of an evaluation of hereditary effects over the first two subsequent generations from the irradiation of either parent, the risk appears to be $\sim 1.0 \times 10^{-2}$ Sv^{-1} (1.0×10^{-4} rem^{-1}). This value was obtained by considering the proportion of exposures that were likely to be genetically significant. The ICRP

concluded that the genetic risk must be less than the mortality risk from fatal cancers. Thus, the risk estimate was reduced by the ratio of the mean reproductive life to the total life expectancy (i.e., ~0.40).

ii. Red bone marrow. Irradiation of the red bone marrow is clearly linked with the induction of leukemia. Other blood-forming tissues are thought to play only a very minor role in leukemia induction. For radiation protection purposes, the risk coefficient for leukemia was taken to be 2.0×10^{-3} Sv^{-1} (2.0×10^{-5} rem^{-1}).

iii. Bone. ICRP-11 (published in 1968) identified the radiosensitive cells in bone as the endosteal cells and the epithelial cells on bone surfaces. The sensitive cells are assumed to lie within 10 μm of the bone surfaces. The primary radiation-induced effect in these cells is cancer; however, the bone seems to be much less sensitive to radiation than other organs and tissues are. For this reason, the risk coefficient assigned by the ICRP was 5.0×10^{-4} Sv^{-1} (5.0×10^{-6} rem^{-1}).

iv. Lung. For the lung, the major radiation-induced effect is lung cancer. The evidence examined by the ICRP indicated that the risk of cancer was of the same order of magnitude as for the development of leukemia. Therefore, the risk coefficient assigned to the lung was 2.0×10^{-3} Sv^{-1} (2.0×10^{-5} rem^{-1}). In addition to considering the threat of lung cancer from radiation exposure, the ICRP again dismissed the thought that a "hot particle" in the lung would present a higher risk situation than that for material distributed uniformly in the lung.

v. Thyroid gland. The thyroid gland has a high sensitivity to cancer induction due to radiation exposure. In fact, it seems to be higher than that for the induction of leukemia. However, mortality from these thyroid cancers is quite low primarily due to the success in the treatment (e.g., in the United States, thyroid cancer is almost 100% survivable). The risk coefficient assigned to the thyroid gland was 5.0×10^{-4} Sv^{-1} (5.0×10^{-6} rem^{-1}).

vi. Breast. During reproductive life, the female breast may be one of the most radiosensitive tissues in the human body. For radiation protection purposes, the ICRP assigned a risk coefficient of 2.5×10^{-3} Sv^{-1} (2.5×10^{-5} rem^{-1}) to the breast.

vii. All other tissues. There is evidence that radiation is carcinogenic in many other organs and tissues of the body. However, there was not sufficient data available to the ICRP to allow the assignment of individual risk factors. Nevertheless, there was sufficient data to conclude that the risk factor for all other tissues was lower than those specified here. On the basis of that review the ICRP assigned a combined risk coefficient for all remaining unspecified tissues of 5.0×10^{-3} Sv^{-1} (5.0×10^{-5} rem^{-1}). The ICRP assumed that no single tissue was responsible for more than one-fifth of this value. In the discussion of the ICRP calculations, we will see that these unspecified tissues are called the "remainder." However, this simple designation of the remainder is confusing to apply in most dose calculations. A more detailed explanation of the interpretation of the weighting factors for the remainder will be given later in Section V.B.3.a.

3. ICRP Publication 30

Publication of ICRP-30 in 1979 brought with it an entirely new dosimetry scheme for calculating the dose equivalent due to the uptake of radionuclides in the body. The scheme was based on the material discussed above. In the first part of ICRP-30, these basic concepts are reviewed hurriedly, but the dosimetry scheme is discussed in great detail. Although some of the following discussion was initially introduced in ICRP-26, it seems much more appropriate to discuss it in the context of the ICRP-30 formulation for internal dosimetry.

a. Determination of the tissue weighting factors. Up to this point the progress of the ICRP has been traced to lead up to deriving the tissue weighting factors needed in Eq. (21). The susceptible tissues have been identified and a risk coefficient has been assigned to each tissue based on the available biological evidence. The next step is to calculate the individual weighting factors. This is accomplished by taking the ratio of the individual risk for a tissue to the sum of all the risk coefficients. In other words, the weighting factor is given by

$$w_{\mathrm{T}} = \frac{\text{risk coefficient for tissue (T)}}{\text{sum of all risk coefficients}}. \qquad (23)$$

This calculation is summarized in Table X where the tissues at risk, the radiation effects, the risk coefficients, and the weighting factors are given. The "remainder" category is assigned to the five tissues, other than those in Table X, which receive the highest dose equivalents. A weighting factor of 0.06 is assigned to each of five tissues. If the gastrointestinal tract is irradiated, each section of the tract is considered to be a separate tissue.

The remainder, according to the ICRP, consists of those organs or tissues not mentioned in (a) the metabolic model for the element, (b) the gastrointestinal tract model, and (c) the table of weighting factors (i.e., Table X). As stated above, the weighting factor assigned to any single organ cannot exceed 0.06, and no more than five organs may be considered when the health physicist is applying these factors. A complication arrives when the gastrointestinal tract or organs mentioned in the metabolic model are irradiated to a significant extent. What weighting factors are to be applied to these organs?

TABLE X Calculation of Tissue Weighting Factors of Stochastic Risks

Tissue (T)	Radiation effect	Risk coefficient (Sv^{-1})	W_T
Gonads	Hereditary	0.4×10^{-2}	0.25
Breast	Cancer	2.5×10^{-3}	0.15
Red bone marrow	Leukemia	2.0×10^{-3}	0.12
Lungs	Cancer	2.0×10^{-3}	0.12
Thyroid gland	Cancer	5.0×10^{-4}	0.03
Bone surfaces	Cancer	5.0×10^{-4}	0.03
Remainder[a]	Cancer	5.0×10^{-3}	0.3
		1.65×10^{-2} (Total)	

[a] Assigned to any five organs and tissues not designated here. See Section V.B.3.a for a more detailed explanation.

The ICRP has introduced a scheme to account for this situation. The weighting factor used for each of the individual organs is chosen to be 0.06. The weighting factor to be applied to the remainder is reduced by subtracting the sum of the weighting factors applied to these organs from the total weighting factor available for use (i.e., 0.30). The following example clarifies this point.

Suppose that the organs considered to be irradiated significantly are the liver, small intestine, lower large intestine, adrenals, pancreas, and uterus. The liver has the highest committed dose equivalent and the uterus the lowest. The other organs are arranged in rank order according to the value of the committed dose equivalent for each. In the calculation of the weighted committed dose equivalent, the committed dose equivalent values for the liver, small intestine, and lower large intestine are each multiplied by the factor 0.06. Based on the recommended ICRP scheme, the weighting factor for the other three organs cannot exceed 0.12. In this case, the ICRP recommends that the organ with the highest committed dose equivalent be selected and that the entire weighting factor be applied to this single organ. In recommending this procedure, they are assuming that the weighted committed dose equivalent for all three organs will be overestimated.

This procedure may seem confusing and it is, but the ICRP procedure is relatively straightforward and exceptions are usually noted in supplemental material published by the Commission to support the basic limits.

b. Secondary and derived limits. The Commission has defined new terms and recommended new limits for use in radiation protection. Use of the words *maximum permissible* has been discontinued due to the misinterpretation of the intent of the concept and the misuse of the limits recommended by the ICRP. To meet the basic ICRP limits on radiation exposure of workers, intakes of radioactive material in any one year must be limited to satisfy the following conditions:

$$I \sum_{\mathrm{T}} w_{\mathrm{T}} H_{50,\mathrm{T}} \leq 0.05\ \mathrm{Sv/yr} \tag{24}$$

and

$$I H_{50,\mathrm{T}} \leq 0.5\ \mathrm{Sv/yr}. \tag{25}$$

Note that Eq. (24) applies a limit to stochastic effects whereas Eq. (25) limits nonstochastic effects from the intake of radioactive materials. The ICRP also emphasizes that it is sufficient to limit the intake of radioactive materials in any one year to the recommended limits and there is no need to specify a limit on the rate of intake.

A secondary limit has been defined to meet the basic conditions for occupational exposure stated in Eqs. (24) and (25). This limit is called the *annual limit on intake (ALI)* and is defined as the activity of a radionuclide that if taken in alone, would irradiate a person, represented by Reference Man, to the limit set by the ICRP for each year of occupational exposure.

More specifically, the ALI is the greatest value of the annual intake I that satisfies both the following inequalities:

$$I \sum_{\mathrm{T}} w_{\mathrm{T}} (H_{50,\mathrm{T}} \text{ per unit intake}) \leq 0.05\ \mathrm{Sv/yr} \tag{26}$$

and

$$I (H_{50,\mathrm{T}} \text{ per unit intake}) \leq 0.5\ \mathrm{Sv/yr}, \tag{27}$$

where I (in Bq) is the annual intake of the specified radionuclide either by ingestion or inhalation and the other parameters are as identified earlier.

In ICRP-2 exposure to radionuclides was controlled by applying recommended MPCs in air or water to the specific exposure situation. Even though the basic recommendation of the Commission under the new formulation is based on the ALI, the Commission chose to include another quantity for convenience in controlling exposure to airborne radionuclides. This quantity was called the derived air concentration (DAC).

i. Derived air concentration. That concentration of a radionuclide in air, which if breathed by Reference Man for a working year of 2000 hr under conditions of "light activity," would result in the ALI by inhalation. That is,

$$\mathrm{DAC\ (Bq/m^3)} = \frac{\mathrm{ALI\ (Bq/yr)}}{(2000\ \mathrm{hr/yr})(1.2\ \mathrm{m^3/hr})}, \tag{28}$$

or

$$\mathrm{DAC\ (Bq/m^3)} = \frac{\mathrm{ALI\ (Bq/yr)}}{2.4 \times 10^{-3}\ \mathrm{m^3/yr}}. \tag{29}$$

In Eq. (28) the time of 2000 hr is obtained from the assumption of a 40-hr work week for 50 weeks per year. The

quantity 1.2 is the volume of air, in units of cubic meters, assumed to be breathed by Reference Man per hour under conditions of light activity.

c. Other definitions. Several other definitions are necessary before proceeding with a detailed discussion of the ICRP internal dosimetry scheme. As mentioned earlier, the ICRP discarded the critical organ concept because it did not fit the new scheme. However, there is still a need to call the organs and tissues of the body by some name. The ICRP has introduced the terms *source tissue* and *target tissue* to describe these tissues. *Source tissue (S)* is a tissue (which may be a body organ) that contains a significant amount of a radionuclide after intake of that radionuclide into the body. *Target tissue (T)* is a tissue (which may be a body organ) in which radiation energy is absorbed.

It should be clear that each source tissue is also a target tissue because some, if not all, of the radiation emitted by the radionuclide in the source tissue will be absorbed in the source tissue. It should also be clear that every target tissueis not necessarily a source tissue. This is true because some tissues may lie a significant distance from the source tissue but be irradiated because the radionuclide may emit X-rays or gamma rays, which can travel large distances in tissue.

Before the details of the calculation of committed dose equivalent are discussed, there are two more definitions to introduce in this section. These definitions are important in discussing the bone model used in the new calculations.

Volume seekers are radionuclides that tend to be distributed throughout the bone volume.

Surface seekers are radionuclides that tend to remain preferentially on bone surfaces.

d. Calculation of the committed dose equivalent. The committed dose equivalent is defined as the total dose equivalent to an organ or tissue over the period of 50 yr after intake of a radioactive material. That is, the dose equivalent (or the committed dose equivalent) is proportional to the product of the total number of transformations occurring in the tissue over the time period of interest and the energy absorbed per gram of tissue per transformation of the radionuclide. In other words,

$$\begin{bmatrix}\text{committed dose}\\ \text{equivalent}\end{bmatrix} \propto \begin{bmatrix}\text{total number of transformations}\\ \text{in tissue over period of interest}\end{bmatrix} \times \begin{bmatrix}\text{energy absorbed per gram of target}\\ \text{tissue per transformation}\end{bmatrix}$$

And, in the new symbolism used by the ICRP, the preceding word equation becomes

$$H_{T,50} = k \times U_S \times \text{SEE}, \tag{30}$$

where U_S represents the total number of spontaneous nuclear transformations of a radionuclide occurring in the source tissue (S) over a period of 50 yr after intake and SEE stands for the specific effective energy imparted per gram of the target tissue (T) from a transformation occurring in the source tissue.

The total number of transformations in the organ is obtained by integrating (or summing) over time an equation that describes the way material is retained in the organ. This equation includes loss by radioactive decay as well as loss through biological elimination. In early discussions of internal dose, the integrated activity was often called the cumulated activity and had units of microcurie-days. In the new ICRP formulation, the units on the quantity total number of nuclear transformations over a period of 50 yr after intake of the radionuclide are transformations per becquerel.

The specific effective energy is obtained from a consideration of the radiological characteristics of the nuclide deposited in the organ. These parameters, except for one, may be obtained from a review of the decay scheme of the particular radionuclide. The equation for SEE is

$$\text{SEE}(\text{T} \leftarrow \text{S}) = \sum_i \frac{Y_i E_i AF(\text{T} \leftarrow \text{S}) Q_i}{M_T}, \tag{31}$$

where

Y_i = the yield of the radiations of type i per transformation of the radionuclide j.
E_i = the average or unique energy of radiation i in units of million electron volts.
$AF(T \leftarrow S)$ = the fraction of energy absorbed in target organ T per emission of radiation i in source organ S.
Q_i = the appropriate quality factor for radiation of type i.
M_T = the mass of the target organ in grams.

The factor $AF(\text{T} \leftarrow \text{S})$ is called the absorbed fraction of energy and is simply the ratio of the energy absorbed in a target organ to the total energy emitted by the radionuclide in the source organ. The symbols S and T and the arrow appear in the equation as reminders of this relationship. Before proceeding further with the development of the ICRP equations, the concept of the absorbed fraction of energy should be reviewed. For alpha and beta radiation (i.e., nonpenetrating radiation), all radiation energy

is assumed to be absorbed in the organ containing the radionuclide. In this case, the absorbed fraction in the source organ (i.e., S ← S) is equal to 1.0. The absorbed fraction in all other target organs (i.e., T ← S) is assumed to be 0. There are two exceptions to this general rule for alpha and beta radiation. These are special situations in which the source is the bone or the contents of the gastrointestinal tract and the targets are cells in the bone or in the walls of the gastrointestinal tract.

It should be clear then that the absorbed fraction concept really applies in situations where the radionuclide has a significant penetrating radiation component (i.e., X-ray or gamma-ray emission). In the discussion of the ICRP-2 techniques, the only organ considered in the dose calculation was the organ containing the radionuclide (i.e., the critical organ). In the new ICRP internal dose formulation, the absorbed fraction concept allows the source organ to irradiate another target organ, which may be located some distance away (e.g., liver, thyroid). The British have nicknamed this concept "cross-fire."

There is one more complication of committed dose equivalent. The ICRP has not published data that give the absorbed fractions of energy for radionuclides that can be used in dose calculations. Instead, the ICRP published data on the specific absorbed fractions (SAF). The SAF is defined as the absorbed fraction divided by the mass of the target organ. In other words,

$$\mathrm{SAF} = \frac{AF(\mathrm{T} \leftarrow \mathrm{S})}{M_{\mathrm{T}}}. \tag{32}$$

In this equation, both parameters on the right side are included in the specification of the SEE.

To return to the equation for committed dose equivalent, we evaluate the constant in Eq. (30). In the new ICRP formulation, the committed dose equivalent has units of sieverts per unit intake (1 Sv = 1 J/kg). Therefore, the quantities on the right side of the equation must be multiplied by a constant to bring both sides into agreement. The total number of transformations has units of transformations per becquerel and the specific effective energy has units of million electron volts per gram per transformation. In addition, the quality factor is "hidden" in the calculation of the SEE. Therefore, to bring both sides of the equation into agreement, we must multiply by 1000 g/kg and 1.6×10^{-13} J/MeV. Eq. (30) then becomes

$$H_{\mathrm{T},50}(\mathrm{T} \leftarrow \mathrm{S}) = 1.6 \times 10^{-10} U_{\mathrm{S}} \times \mathrm{SEE}(\mathrm{T} \leftarrow \mathrm{S}). \tag{33}$$

The subscript T,50 on the committed dose equivalent indicates that the committed dose equivalent was calculated for a single organ or tissue of the body (target tissue) and that the time period of concern is 50 yr after the intake. This equation also applies to the situation in which a source organ is irradiating a single target organ. There may be cases in which the target organ is irradiated by several source organs. In this case, the committed dose equivalent contributed by each source organ must be summed to obtain the total committed dose equivalent for a particular target organ.

As stated previously, these ICRP concepts formed the basis for the current federal regulations on radiation exposure (even though the discussion focused primarily on internal dosimetry). More recent recommendations of the ICRP and the NCRP were issued in 1990 and 1993, respectively. These new recommendations are based on a re-evaluation of the risk coefficients used in ICRP-26 and include new concepts and exposure limits. However, these revised recommendations have not been adopted into the federal regulations in the United States and thus are not be discussed here. The interested reader is referred to publications of the ICRP and NCRP listed in the Bibliography.

Summary

In this section, the concepts of the ICRP for internal dose assessment (i.e., internal dosimetry) have been introduced. However, a great deal of the detailed information regarding the new techniques has not been explained fully. The intent was simply to introduce these concepts, and further study of the concepts, models, and detailed calculations are left to the reader.

These concepts appear to be extremely complicated, and the calculations seem to have many complexities. However, this is not completely the case. Remember that the concepts may be called by different "names" but the basic idea of calculating the energy deposited in an organ containing radioactive material *has not changed*. This statement is true with regard to the "old ICRP Publication 2" techniques as well as the techniques introduced in the early 1940s. It is still necessary only to determine the total number of nuclear transformations occurring in the tissue over the time period of interest and multiply this quantity by the total energy deposited in the tissue per transformation per gram of tissue.

SEE ALSO THE FOLLOWING ARTICLES

COSMIC RADIATION • HEALTH PHYSICS • NUCLEAR POWER REACTORS • NUCLEAR RADIATION DETECTION DEVICES • NUCLEAR REACTOR THEORY • NUCLEAR SAFEGUARDS • RADIATION PHYSICS • RADIATION SHIELDING AND PROTECTION • RADIOACTIVITY • SOLAR PHYSICS

BIBLIOGRAPHY

Attix, F. H., and Roesch, W. C. (1968). "Radiation Dosimetry," Vol. 1, 2nd ed., Academic Press, Orlando, Fla.

Cember, H. (1983). "Introduction to Health Physics," 2nd ed., Pergamon, Oxford.

Eichholz, G. G., and Poston, J. W. (1985). "Principles of Nuclear Radiation Detection," Lewis, Chelsea, Mississippi.

Greening, J. R. (1985). "Fundamentals of Radiation Dosimetry," 2nd ed., Medical Physics Handbooks 15, Adam Hilger Ltd., Accord, Mass.

International Commission on Radiological Protection (1959). "Report of Committee II on Permissible Dose for Internal Radiation," ICRP Publication 2, Pergamon, Oxford.

International Commission on Radiological Protection (1977). "Recommendations of the ICRP," ICRP Publication 26, Pergamon, Oxford.

International Commission on Radiological Protection (1979). "Limits for Intakes of Radionuclides by Workers," ICRP Publication 30, Annals of the ICRP, 2, Pergamon, Oxford.

International Commission on Radiological Protection (1990). "Recommendations of the ICRP," ICRP Publication 60, Pergamon, Oxford.

Kase, K. R., Bjarngard, B. E., and Attix, F. H. (1985, 1987, 1990). "The Dosimetry of lonizing Radiation," Vols. 1, 2, and 3, Academic Press, Orlando, Fla.

Loevinger, R., Budinger, T. F., and Watson, E. E. (1988). "MIRD Primer for Absorbed Dose Calculations," Society of Nuclear Medicine, New York.

National Council on Radiation Protection and Measurements (1993a). "Risk Estimates for Radiation Protection," NCRP Report No. 115, Bethesda, Md.

National Council on Radiation Protection and Measurements (1993b). "Limitation of Exposure to Ionizing Radiation," NCRP Report No. 116, Bethesda, Md.



Fission Reaction Physics

Madeline Anne Feltus
U.S. Department of Energy

I. Overview of the Fission Process
II. Atomic Structure and Binding Forces
III. Nuclear Reactions
IV. Steady-State Fission Chain Reactions

GLOSSARY

Chain reaction Sustained reaction where neutrons produce fissions, which in turn produce more neutrons, which cause the next generation of fission reactions.
Core The nuclear fuel region inside a reactor system where the fission chain reaction is sustained.
Critical Condition where a fission chain reaction is stable with neutron production balancing losses at a nonzero level.
Fast neutrons Neutrons of high energy especially those produced directly by the fission process.
Fertile Material, not itself fissile, but capable of being converted to fissile material (isotope) after the absorption of a neutron.
Fissile Material capable of sustaining a fission chain reaction, after bombardment with neutrons of any energy.
Fission Process where a heavy nucleus splits into two or more large fragments and releases kinetic energy and neutrons.
Half life Time required to reduce the number of decaying nuclei to one-half of the original number available, which is inversely proportional to the mean decay constant or $\tau_{1/2} = \ln 2.0/\lambda$.
Isotope A particular atom that has the same number of protons and chemical properties of elements but has a unique number of neutrons and atomic mass number.
Moderator Material of low atomic mass inside a reactor core that reduces the neutron energy level of fast neutrons, e.g., water, graphite, down to thermal neutron energies.
Multiplication factor Ratio of neutron production rate to the neutron loss rate; value is one for a critical system.
Reactor Fissile and other material designed in a specific arrangement to support a neutron chain reaction.
Reflector A moderating material placed at the edge of the reactor core that scatters neutrons back into the core to produce more fissions.
Thermal neutrons Lower energy neutrons produced by slowing down or moderating fast neutrons produced in nuclear fission reactions.

THE NEUTRON FISSION PROCESS was discovered in 1939 by Otto Hahn and F. Strassman and Lise Meitner and O. Frisch. When a neutron collides into a nucleus of U-235, a fission reaction may occur where it splits into two or more fragments and releases energy, more neutrons, and gamma radiation, as shown in Fig. 1. The physics of the fission process has been investigated by nuclear physicists

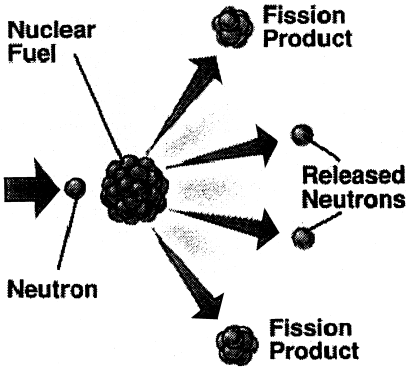

FIGURE 1 Nuclear fission reaction.

and engineers who have developed the means to control and sustain the energy produced. This energy release from the atomic nucleus is over 50 million times the amount of energy that can be released from a chemical reaction such as burning fossil fuels. Thus, the nuclear fission process provides a compact energy source that can be sustained if there are enough extra neutrons per fission to sustain a chain reaction. Nuclear power reactors have been designed to produce electricity efficiently and safely, however, the disadvantage of the fission reaction is that atomic particles and electromagnetic radiation are emitted promptly and the resultant fission products remain radioactive over time and eventually decay away. The irradiated materials and spent reactor fuel must be handled remotely. The fission chain reaction is stopped when neutrons are no longer emitted promptly, but the heat from the radioactive decay of the fission products needs to be removed from the reactor to avoid material failures and releases.

I. OVERVIEW OF THE FISSION PROCESS

The fission process involves the splitting of atoms into fragments. Some very heavy elements can have spontaneously fission but most need to be bombarded by neutrons to induce it. The ability to fission depends on the particular isotope and the energy of the incident neutron. A material or isotope that is capable of undergoing fission directly by neutrons of any energy level is said to be fissile. Nuclei that can be fissioned by higher energy neutrons are fissionable, but may not be fissile, in that they cannot be fissioned by low energy or thermal neutrons, which have typically less than 1 million electron volts (MeV) of energy. Fissionable materials need high energy or fast neutrons to undergo fission reactions. Some materials cannot fission with the absorption of a neutron, but are called fertile, since they are transmuted into fissile nuclei when they capture a neutron, and another neutron must become absorbed to produce fission. For example, the odd numbered heavy isotopes uranium (U-233, U-235) and plutonium (Pu-239, Pu-241) are fissile nuclei. If high-energy fast neutrons are bombarded into thorium (Th-232) and U-238, then fissions can occur, so these even numbered isotopes are considered to be fissionable. Since Th-232 and U-238 can be converted into fissile species (U-233 and Pu-239, respectively), they are called fertile nuclides.

II. ATOMIC STRUCTURE AND BINDING FORCES

The atom is composed of neutrons and protons tightly clustered in an inner nucleus that is surrounded by electrons that travel in different orbits. A proton has a mass slightly less than a neutron but it is 1836 times larger than the electron's mass. In the atom, the proton's positive charge is balanced with the same number of negatively charged electrons. Although the positive charge of the protons in tight proximity in the nucleus would cause electric repulsion, the nuclear forces between the neutrons, which have no electric charge, and the protons are sufficiently strong to keep the nucleus together. The atomic number Z for a particular atom is equal to its number of protons. The atomic mass number, A, is the sum of the number of neutrons N plus Z. Most chemical elements have several isotopes. An isotope has the same Z number as the other atoms in its chemical family, but has a unique number of neutrons, N, and thus a different A. For instance, uranium has several isotopes of interest: U-233, U234, U235, and U-238, but all of them have the same atomic number of 92. As the mass of atoms increase the ratio of neutrons to protons increases beyond 1, or $N = Z$, to increase the stability of the nucleus. Various isotopes are very stable, whereas, others naturally decay by alpha (i.e., He nucleus of two protons and two neutrons) emission to reduce their mass number A and Z simultaneously or by beta (electron or positron) emission to become more a stable isotope.

A. Atomic and Nuclear Bonding

Atomic bonding holds molecules together and provides the means to have naturally existing solids. Ionic bonding allows for the exchange of electrons between atoms so that the atoms are either negatively or positively charged, e.g., salt is NaCl. Covalent bonding takes place when electrons are shared by bound nuclei, such as the hydrogen molecule. Metallic bonding allows valence electrons to wander freely through the lattice structure. Finally, van der Waals bonds are weak bonds caused by nonsymmetrical

electron distributions and are exhibited when inert materials such as argon or helium are solidified at very low temperatures.

Four fundamental forces exist in nature: electromagnetic, gravitational, the strong force that binds protons and neutrons in the nucleus, and the weak force involved with particle decay. Although the electromagnetic and gravitational forces react over very long distances, the strong force operates only over distances equal to the nucleus, and the weak force occurs only at distances less than 1/100th of the nuclear radius. Not only does the strong force bind the nucleons (protons and neutrons) but binds subnuclear particles known as quarks. Each nucleon is composed of three quarks, which would be hard to ever isolate experimentally. Details about subatomic particles and their behavior are beyond this discussion, but may be of secondary importance for describing fission phenomena.

B. Binding Energies and Nuclear Structure

It has been found experimentally that the mass of the nucleus is less than the individual masses of the neutrons and protons making up the atomic nucleus. This difference in mass is caused by the binding energy needed to hold the nucleus together. The binding energy, ΔE, can be found by using Einstein's mass-energy equation, $E = mc^2$, by accounting for the mass defect, Δm,

$$\Delta E = \Delta m c^2$$

The total binding energy represents the energy or work needed to separate the protons and neutrons completely, or, conversely, the energy which would be released if the separated nucleons were assembled together into the nucleus. To find the binding energy, the atomic mass of the combined isotope is compared with the energy of the individual nucleons. By using the isotopic mass, M_x, for the isotope X and the masses of individual protons, electron, and neutrons, the mass defect can be found by

$$\Delta m = Z(m_p) + N(m_n) - (M_x - Z(m_c))$$

If the mass of the hydrogen atom, m_h, is used to approximate the combined electron and proton mass then the binding energy can be calculated with only a small error related to the electron binding energy, which is only a few electron volts:

$$\Delta m = Z(m_h) + N(m_n) - M_x$$

Figure 2 shows the binding energy per nucleon as a function of atomic mass number. This figure represents the average amount of energy needed to separate individual nucleons from the bound atom. The binding energy peaks at the 8.7 MeV per nucleon at the region of A = 56, which is iron. The isotopes around the peak region are therefore the most stable since they use the least amount of energy to hold together.

Since the conversion factor for E in MeV is equal to 931 M_x given in atomic mass units (amu), the binding

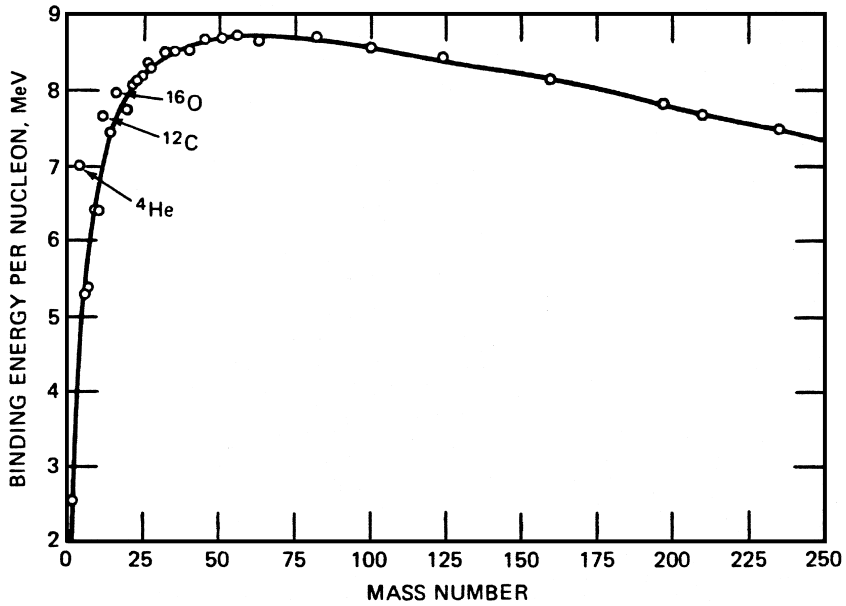

FIGURE 2 Binding energy per nucleon as a function of atomic mass number.

energy per nucleon can be found by using the mass of the proton and neutron in amu:

$$BE\,(\text{MeV})/A = \{931/A\}[1.0081145Z + 1.00898(A - Z) - M_x]$$

The binding energy equation, as shown on the curve, is relatively flat for most isotopes, but Fig. 2 shows why fission and fusion energy is possible. For the light atoms with low mass numbers, the binding energy sharply rises, so that fusing hydrogen, deuterium (H-2), and tritium (H-3) into helium atoms (He-4) produces large energy releases since the helium atom is more stable and requires less energy to bind the atom together than the separate nucleons or lighter isotopes. Furthermore, the fission process releases a large amount of energy since the heavy elements start with roughly 7–8 MeV per nucleon and split into lighter isotopes that have higher binding energies per nucleon. For example, U-235 has a value of 7.5 MeV per nucleon, and when fissioned, produces fragments that have 8–8.5 MeV per nucleon binding energies. The extra 0.9 MeV per nucleon means that about 200 MeV can be released per fission. This amount of energy is over 50 million times the amount of energy that can be released by burning a single carbon molecule which produces only a few electron volts.

C. Radioactive Decay

As the atomic mass number, N, becomes larger, the ratio of neutrons to proton increases and is greater than 1 as shown in Fig. 3. The number of neutrons increases to enhance the stability of heavy isotopes. Since the repulsive forces between positive charge of the protons increases as Z increases, more neutrons become necessary to bind the nucleus together. Figure 2 shows that more isotopes exist above the $A = Z$ line for heavy isotopes, but not all of these isotopes are stable. In fact, more naturally radioactive isotopes exist for heavier isotopes, and various decay chains are possible. Certain nuclei exhibit exceptional stability and contain "magic numbers" for 2, 8, 20, 50, or 82 protons or 2, 8, 20, 50, or 126 neutrons (Glasstone and Sesonske, 1967). These magic numbers indicate that nuclear shells exist, similar to chemical valence or electron shells. The isotopes that are "doubly magic" are extremely stable such as O(8, 16), Ca(20, 40), and Pb(82, 208). The isotopes that have magic number protons tend to have many isotopes that are readily available in nature, e.g., tin has 50 protons exits in ten stable isotopic forms.

Unstable nuclei will decay, or emit three types of radiation to become more stable: (1) alpha particles which are helium nuclei with two neutrons and protons, without electrons, (2) beta particles which are negatively charged electrons expelled by the nucleus itself by converting a neutron into a proton, and (3) gamma rays which are electromagnetic radiation that allows the excited nucleus to drop down to a more stable ground state. Radioactive decay can occur naturally or because of induced nuclear reactions. Heavy elements such as uranium or thorium decay slowly with alpha emissions since they were created at the beginning of earth's formation. Daughter products from initial heavy elements can be naturally radioactive. Bechqerel is generally credited with the discovery of radioactivity in 1986. Marie and Pierre Curie succeeded in discovering how to separate radium from radioactive ore in 1898.

Many physicists studied radioactivity and discovered new particles and nuclear physics phenomena (Meyerhof, 1987) but the discovery of the fission process was one of the results of scientists trying to transmute elements beyond uranium ($Z = 92$) by using neutron, gamma reactions that would produce beta decay. In 1939 two teams of scientists, Otto Hahn and F. Strassman, and Lise Meitner and O. Frisch simultaneously discovered the fission process. Earlier experiments had been hard to interpret because of the difficulty of chemically separating radioactive isotopes from the nonradioactive isotopes of the same element. Hahn and Strassmann performed experiments that proved that the "radium" isotopes were really barium and that the "actinium" isotopes were really lanthanum isotopes. When a thin layer of uranium was irradiated with neutrons in an ionization chamber, great bursts of energy (i.e., ionization) up to 100 MeV were observed by Frisch. Lise Mitner gave conclusive evidence that the results of their chemical and physics tests could only be explained by postulating that the atoms had undergone the fission process.

Further research showed that the fission process could be produced in various isotopes using different incident particles including fast and thermal neutrons, alpha particles, protons, deuterons, and gamma rays. Fission product fragments undergo intense radioactive decay because N/Z ratio is too high for stability. Finally unstable isotopes can be created by particle bombardment, e.g., neutron activation, where the neutron absorbed by the nucleus creates an unstable isotope, which in turn, decays. The radioactive decay of fission products and prompt alpha and/or neutron emission during the fission process provides the means to produce energy immediately or in a delayed manner.

III. NUCLEAR REACTIONS

The nucleus can be bombarded by various types of incident particles such as alpha or helium nuclei, α, neutrons, n, protons, p, deuterons, d, which have a neutron and a proton, just like a deuterium nucleus, or by electromagnetic energy in the form of a gamma ray, γ. When the incident

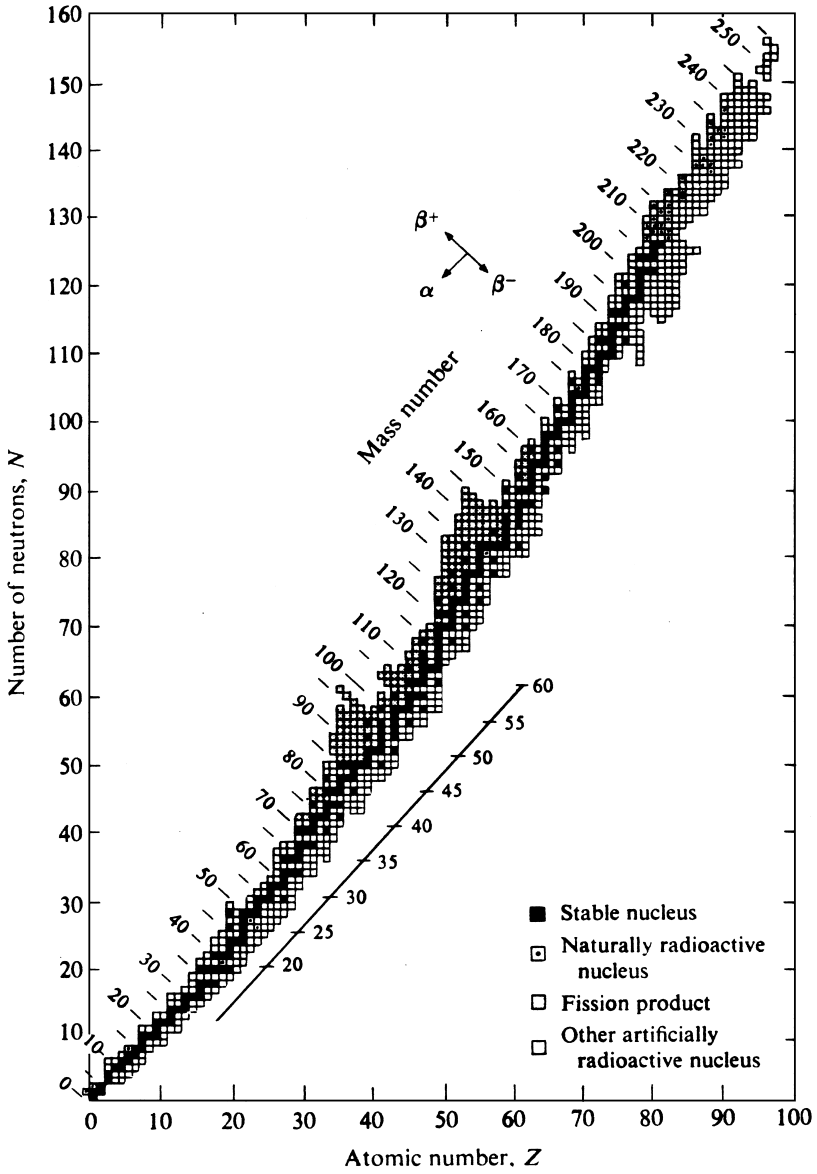

FIGURE 3 Distribution of stable and radioactive nuclides for *A, Z*.

particle (n, p, d, α, or γ) is absorbed by the target nucleus, a highly exited compound nucleus is formed. The compound nucleus then ejects a particle and/or gamma radiation to drop into a lower energy state. Neutron-nuclei reactions fit mainly in three general categories; namely, scattering, capture, and fission. When neutron-neutron interactions occur, the first step in the process involves the neutron absorption into a compound nucleus that is in an excited higher energy state.

A. Compound Nucleus

Before a compound nucleus can be formed, the incident particle (n, p, d, α, or γ) must have sufficient energy to overcome the potential barrier caused by the repulsion of the positive protons and the negative electrons surrounding the nuclei. The kinetic energy of the particle is converted into potential energy until the short-range nuclear forces balance the repulsive force Then the particle can enter the nucleus dropping into the potential well produced by the binding energy difference. Classical mechanics would forbid any charged particle from entering the nucleus unless it has sufficient energy to exceed the potential barrier, but quantum mechanics predicts that there is a small chance for the particle to "tunnel" into the nucleus. Since neutrons and gamma particles do not have a charge, they can enter the nucleus without having to surmount any potential charge barrier.

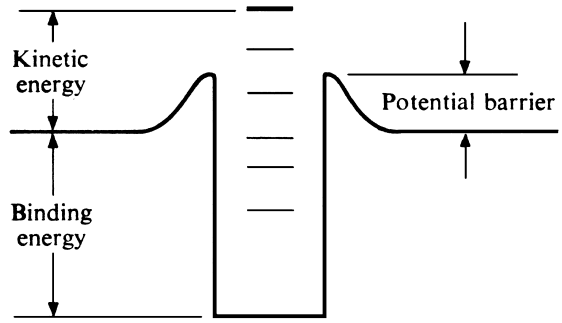

FIGURE 4 Energy levels for the compound nucleus.

The incident particle may combine to form a compound nucleus that exists for only 10^{-14} seconds, and it immediately shares its energy with all the nucleons in the compound nucleus. The compound nucleus does not "remember" which particle entered in this short energy exchange. One nucleon may gain sufficient energy for a subsequent particle ejection. For instance, a neutron may be absorbed into a nucleus and another neutron may be ejected promptly. During the nuclear reaction, mass, momentum, and energy must be conserved, as well as the conservation of charge. The velocities, masses, and particle energies must be calculated to be conserved in the center-of-mass system and laboratory frame-of-reference (Lamarsh, (1966) and Foster and Wright, 1983). Figure 4 shows the energy levels for the compound nucleus. The energy of the compound nucleus is equal to the binding energy contributed by the incident particle plus its kinetic energy.

B. Types of Neutron Reactions

Neutrons interact with atoms in various mechanisms that can be classified as either fission, capture, or scattering events. Scattering reactions occur when a neutron is rapidly expelled from the compound nucleus, usually at a lower kinetic energy than the absorbed neutron, so that the excess energy stays with the nuclei and the nuclei are designated (n, n'). If the additional energy excites the nuclei so that it remains as internal energy, then the scattering event is inelastic; however, if the extra energy is solely kinetic, so that the velocity (i.e., speed and direction) of the nuclei is changed, but the nuclei itself is not in an excited state, then an elastic scattering event has happened. Elastic scattering occurs when both the momentum and kinetic energy of the incident and emerging neutrons are exactly conserved. Since the direction and/or velocity of the neutron is changed after the emission from the nuclei, the term "scattering" is used. If the interaction between the nucleus and the neutron fails to produce subsequent neutrons, the process is considered a radiative or parasitic neutron capture. Usually a capture event produces an excited state in the nuclei, with a subsequent gamma emission to return the nucleus back to the ground state so the symbol (n, γ) is used.

C. Fission Reactions

When a heavy nucleus absorbs a neutron, it will split into two or more fragments with the ejection of several high-energy, high-velocity (fast) neutrons in the fission process. The only naturally occurring isotope that can fission with the absorption of a slow, low energy (thermal) neutron is U-235. U-238, its more abundant sister element, needs to be bombarded by a neutron with at least 1 MeV of kinetic energy or higher before it can fission. Other isotopes that need fast neutron induced fission include U-233, Th-232, and Pu-239. Sometimes many neutrons are emitted by fission, and the average number of neutrons produced by fission, ν, depends on the incident neutron energy. Table I shows the values of ν for various reactor fuel isotopes. Figure 5 shows an example of how a thermal neutron converts U-235 into a U-236 compound nucleus and then fissions into fragments of Cs-140 and Rb-93, producing 3 fast neutrons.

Table II gives the critical energy for fission for important heavy elements, the neutron-binding energy and the value of Z^2/A. For the odd numbered fissile nuclides, U-233, U-235, and Pu-239, the neutron-binding energy exceeds the critical energy for fission, so that any capture of a low- or zero-energy neutron would produce sufficient

TABLE I Values of η, ν, and α for Important Fissile and Fissionable Isotopes

	Thermal neutrons (0.0253 eV)		Fast neutrons (~1 MeV)		Fast neutrons (~02 MeV)		Capture-to-fission ratio, $\alpha = \sigma_c/\sigma_f$	
Isotope	ν	η	ν	η	ν	η	Fast-α;	thermal-α
Uranium-233	2.50	2.30	2.62	2.54	2.73	2.57	~0.08	~0.11
Uranium-235	2.43	2.07	2.58	2.38	2.70	2.54	0.152	0.172
Plutonium-239	2.89	2.11	3.00	2.92	3.11	2.99	0.086	0.38
Uranium-238	—	—	—	—	2.69	2.46	1.44	—

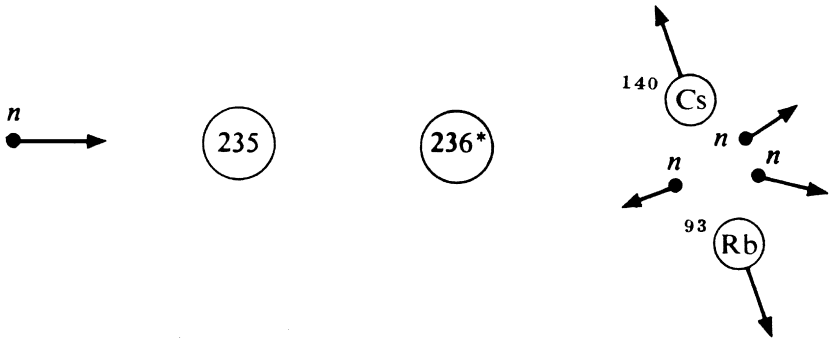

FIGURE 5 Thermal neutron fission process example.

excitation to produce fission. The situation is different for U-238 and Th-232 which have neutron bonding energies less than their critical energies; hence, incident neutrons must have sufficiently high energies to induce fission. The liquid drop model (see Section III.D) predicts that repulsion of protons is proportional to Z^2 but the attraction is proportional to the overall atomic mass, A. Thus, the value of Z^2/A becomes a measure of the propensity for a given isotope. If Z^2/A is less than 35, then the critical energy is so large that very high energy (i.e., fast) neutrons are required for fission. If Z^2/A is larger than 35 then the critical energy is reduced to 6 MeV or less, which is near the binding energy value, so that low energy (i.e., thermal) neutron fissions are possible.

The distribution of the fission fragment isotopes depends on the incident neutron energy, and the isotopes are not equally split. In fact, the fission fragments break into unsymmetric mass number elements of various sizes, and combinations. Figure 6 shows the experimentally determined "double-hump" fission yield curve for U-235 for both fast and thermal incident neutrons. For higher energy incident neutrons, the U-235 will fission more symmetrically, but even in the limit of extremely high energy neutrons, the double-hump yield curve never flattens out to get fission fragments that have equal masses. Also, it is important to note that the "double-hump" fission product mass yield curve shifts for different fissile isotopes, as shown in Fig. 7.

TABLE II Critical Energy for Fission, Neutron-Binding Energies, and Value of z^2/A for Important Heavy Elements

Target nucleus	Z^2/A	Critical energy (MeV)	Binding energy of the extra neutron (MeV)
Thorium-232	34.9	5.9	5.1
Uranium-238	35.6	5.9	4.9
Uranium-235	36.0	5.8	6.4
Uranium-233	36.4	5.5	6.6
Plutonium-239	37.0	5.5	6.4

D. Liquid Drop Model

A nucleus may be thought of as a drop of very high density nucleonic fluid to describe how the nucleus stays together in nature, and how it breaks apart during the fission

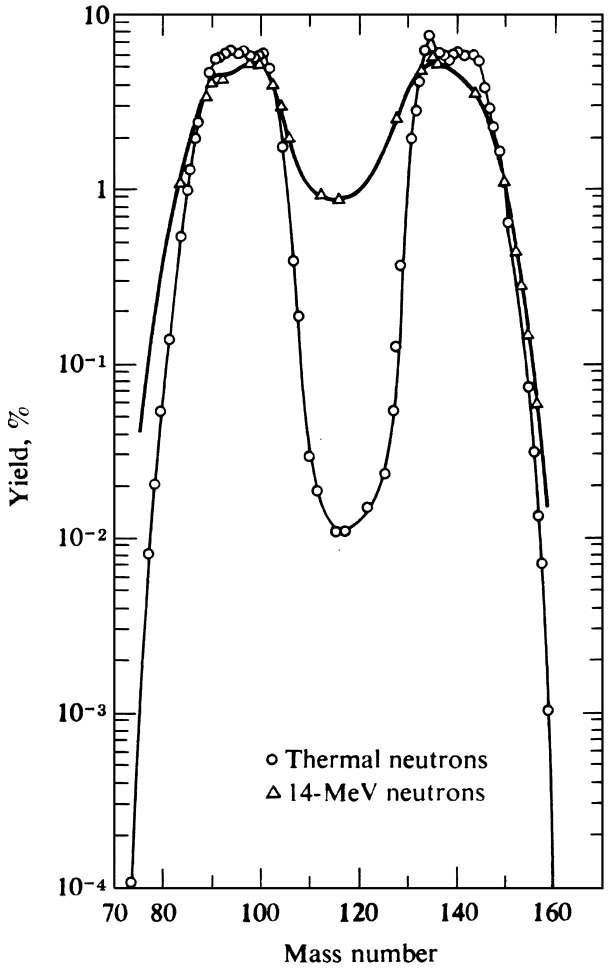

FIGURE 6 Fission product yield curve for U-235 for both fast and thermal incident neutrons.

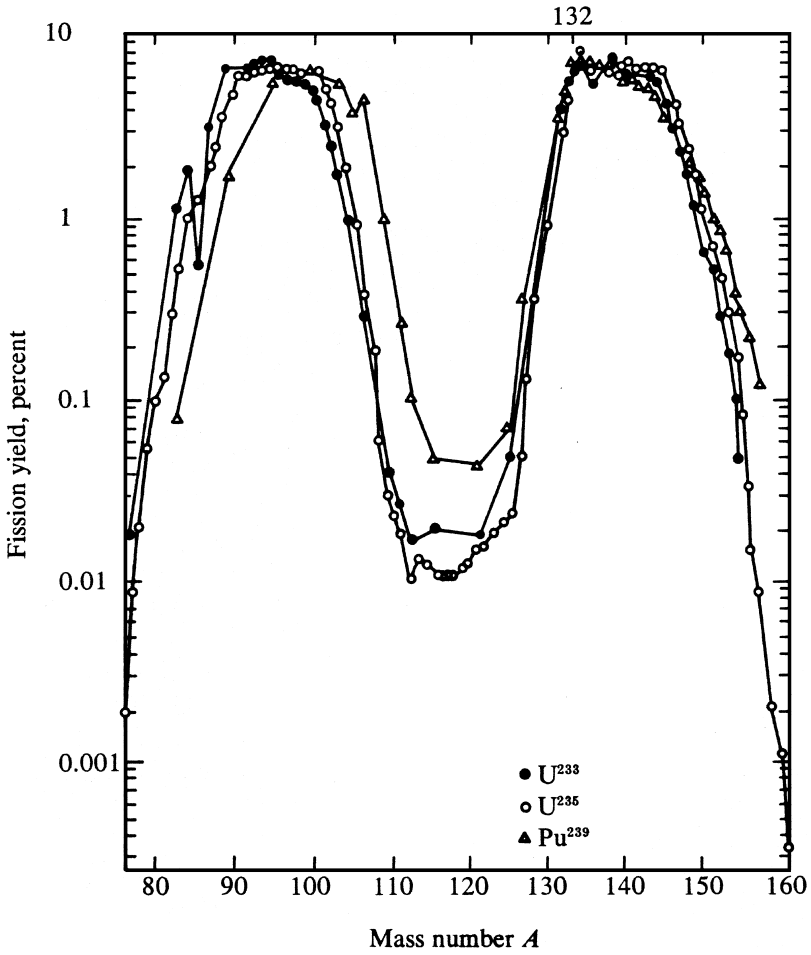

FIGURE 7 Fission product yield curve for U-233, U-235, and Pu-239.

process. Using the concept from classical physics of electrostatic repulsion and surface tension, it is possible to set up a semiempirical binding energy formula for the mass or binding energy of the nucleus in the ground state. This formula was developed using different parameters that affect the nuclear-binding stability. Coulomb energy, surface energy, symmetry effects, and the odd-even effect are used to develop the formula which has specific empirical constants (Kaplan, 1962):

$$\text{Binding Energy (Mev)} = 14.0A - 0.584Z(Z-1)A^{-1/3} - 13.1A^{2/3} - 19.4\{(A-2Z)^2/A\} + E^*$$

where E^* is based on the odd-even effect. If A and Z are even then E^* is $135/A$. If A is even and Z is odd, then the value of E^* is $-135/A$. E^* is zero when A is odd, that is when A is odd and Z is even or when A and Z are both odd.

Other formulae have been developed but the concept of a generalized semiempirical mass of binding energy equation represents most of the data well, but does not account for all the features of the dependence of the binding energies on mass energy or charge number. The liquid drop model has also been used to describe the compound nucleus model, nuclear fission phenomena, and the distortion of fission fragments. Different stages of the fission process exhibit different energetic behavior, and various theories have been postulated. The Bohr-Wheeler theory (Kaplan, 1962) can be used to describe how the drop's potential energy changes as the drop deforms. But these theories and methods do not yet totally explain the unsymmetric fission product yield or the distribution of possible daughter products (Kaplan, 1962).

E. Fission Energy Release

The binding energy per nucleon and the mass defect Δm predicts that about 1 MeV per nucleon is available for producing energy. But not all of the energy is available for power production since the fission process yields fission

fragments, gamma rays, and beta decay particles. Also neutrinos are released with energy unavailable for heat. To find the amount of energy available from uranium fissions, the binding energy of the U-235 isotope, which is about 7.5 MeV per nucleon, can be used. Most of the fission products in the 80–150 mass number range have 8.4 MeV per nucleon binding energies. The difference per nucleon is therefore 0.9 MeV. When the U-235 is bombarded by the neutron, a compound nucleus (U-236) is formed so that the number of particles (236) can be multiplied by the excess binding energy per nucleon (0.9 Mev) or approximately 200 MeV. Table III gives the energy distribution for U-235 thermal neutron fissions. The kinetic energy of the fission fragments and the instantaneous gamma rays are available for producing heat in the fuel material for energy production. The fission product gamma and beta decay energies can be recovered partially during the lifetime of the fuel. To understand how much energy is available from fission, 1 g of U-235 if fully consumed by fission would produce approximately 1 million watts, or 1 MW of energy.

Also, the neutrons produced by the fission process are released with a distribution of possible energies that can range from 0 MeV to energies even higher than incoming neutrons. For U-235, the energy distribution has been determined experimentally match the Watt equation (Foster and Wright, 1983):

$$N(E) = 0.453 \exp(-E) \sinh\sqrt{2E}$$

where $N(E)$ is the fraction of neutrons of energy E, MeV per unit energy interval. Using this equation it is found that the most probable energy of U-235 fission neutrons is 0.72 MeV and the average energy is 2.0 MeV.

F. Conversion of Fertile Isotopes

Only 0.711% of natural uranium ($Z = 92$) is made up of the fissile U-235 isotope. The remaining 99.3% is U-238 which cannot be fissioned directly by thermal neutrons.

TABLE III Energy Distribution for U-235 Thermal Neutron Fissions

	pJ	MeV
Kinetic energy of fission fragments	26.9	168
Instantaneous gamma-ray energy	1.1	7
Kinetic energy of fission neutrons	0.8	5
Beta particles from fission products	1.1	7
Gamma rays from fission products	1.0	6
Neutrinos	1.6	10
Total fission energy	**~32**	**~200**

Since U-238 is an even numbered isotope it is fertile and could be converted into a fissile material. This can be done by neutron capture that produces U-239, which in turn decays by beta emission to N-239 and then into Pu-239 by another electron $e(0, -1)$ beta decay. By conserving the number of nucleons present in the reaction, the conversion process can be given as

$$\begin{aligned} \mathrm{U}(238, 92) + n(1, 0) &\rightarrow \mathrm{U}^*(239, 92) \\ &\rightarrow \mathrm{Np}(239, 93) + e(0, -1) \\ \mathrm{Np}(239, 93) &\rightarrow \mathrm{Pu}(239, 94) + e(0, -1) \end{aligned}$$

where the notation $X(N, Z)$ for isotope X is used and an asterisk indicates the compound nucleus formation. When U-235 is fissioned by a thermal neutron, about 2.43 neutrons are produced, so that there is an excess of 1.43 neutrons for producing the next generation of fissions in the steady-state chain reaction; however, these neutrons can either (1) diffuse or leak from the core region, (2) be captured by nonfuel or nonfertile materials in the reactor by parasitic capture, (3) be captured in the fuel in nonfission reactions, or (4) be captured by fertile isotopes in the fuel.

G. Uranium, Plutonium, Thorium, and Heavy Elements

Uranium and thorium occur in nature with various stable isotopes. The isotopes with odd numbered nucleons can be fissioned with incident neutrons that have sufficient energy. U-235 is the only naturally occurring isotope that is fissile, i.e., can be directly fissioned with neutrons of both low (thermal) neutrons. U-235 can also be fissioned with high energy (fast) neutrons. If uranium fuel with both U-235 and U-238 isotopes is used, then the U-235 can be used to produce fast neutrons that can be captured by the U-238, which is fertile, and be converted into Pu-239 for subsequent fissions.

Thorium-232, which is available naturally, is a fertile material that can absorb a neutron that is produced by a previous fission. Thorium-232 can absorb a neutron and beta decay into protactinium-233 and U-233, which can also be fissioned. Thus, Th-232 and U-238 are said to be fertile isotopes that can absorb neutrons, with the right amount of energy, to become fissionable isotopes. Thorium can be combined with uranium either mixed directly or as a "seed" fuel material surrounded as a "blanket" material to converted into a fissionable uranium isotope, U-233.

These heavy isotopes can be mixed together, or formed during the fission and neutron capture process so that the fuel mixture can either be consumed or burned, converted into more fertile isotopes, or even produce more new fissile

nuclei than that being consumed by fission in a breeder reactor core.

H. Delayed Neutron and Fission Product Phenomena

Not all of the neutrons produced by fission appear immediately or simultaneously. If these neutrons were produced and emitted directly, in times less than picoseconds, then the neutron chain reaction could never be controlled at all, let alone safely. Most of the neutron-rich fission products undergo beta decay but some excited daughter products emit neutrons when their excited nuclei decay to a ground state. Fortunately, delayed fission neutrons appear in seven distinct βi groupings that depend on the fuel isotope with different emergent energies, as shown on Table IV. Most of the prompt neutrons are emitted at fast energies, but the delayed neutrons are emitted at much lower energies over different time scales, or half-lives.

The fraction of delayed β neutrons is very small compared to the total number of neutrons emitted. The prompt neutrons $(1-\beta)$ are emitted within microseconds, but the delayed neutrons are emitted over tenths of seconds to about 56 sec with various energies. Typically six delayed neutron groups βi are used to describe the empirical behavior of hundreds of possible fission product isotopes that produce delayed neutrons as they decay into more stable isotopes.

The longest decaying fission product is a bromine isotope (Br-87) which has a 55.72 sec half-life (decay constant) for beta decay into stable isotopes of Sr-87 and Kr-86. The second group of delayed neutrons with the 23-second half-life (decay constant) is mainly composed of iodine (I-137) which has a 22-sec half-life, and forms an excited Xenon (Xe-137) isotope that instantaneously emits a neutron. The other five delayed neutron groups are composite groups of delayed neutron precursor isotopes that have been lumped together. The Br-87 fission product isotope predominates the delayed neutron chain and provides a major source of stability for controlling a chain reaction in a just-critical reactor (see Section IV). If the reactor is subcritical, the impact of the delayed neutrons is not essential since the prompt neutrons predominate and their number decrease over time; however, if the reactor is supercritical, then the delayed neutrons play an essential roll by "holding back" or limiting the rate of increase in the prompt neutron population. The delayed neutrons are emitted at much lower energies than the prompt neutrons so that their range of subsequent interaction is smaller than the prompt fast neutrons which may travel further. Thus, delayed neutrons serve to enhance reactor stability and provide a stable reactor period.

The fission product fragments are neutron-rich and must undergo radioactive beta decay to become stable. Furthermore, these daughter products have large kinetic energy levels and produce large amounts of gamma radiation that release about 7 MeV per fission. The beta and photon (gamma) emissions produce large amounts of heat in a reactor, which can be removed by the reactor coolant system and heat exchangers during normal operations and be used to produce electricity. But when a reactor has been shut down, large amounts of heat continue to be produced by the delayed neutrons, fission product heating, and gamma rays. The amount of decay heat produced depends on how long the reactor was operating, how long since it was shutdown, and the fuel's isotopic content. Detailed empirical equations can be used (Glasstone and Sesonske, 1967), but Table V gives the relative fraction of decay heat after shutdown. Ten seconds after shutdown, about 5% of the power produced during operations is still being generated by the fission fragments and decay products. This heat load provides a significant challenge for designing back-up safety systems. Eventually the decay heat drops to fractions of a percent after shutdown, but this heat load

TABLE IV Prompt and Six Delayed Neutron Groups βi and Energy Levels for Fuel Isotopes

Group No. (i)	Energy for U-235 fission (MeV)	Half-life for U-235 fission (s)	Percentage of total neutrons per fission		
			U-235 (βi)	U-233 (βi)	Pu-239 (βi)
0 (prompt)	~2	$\sim 10^{-8}$	99.359	99.736	99.790
1	0.25	55.72	0.021	0.023	0.007
2	0.56	22.72	0.140	0.079	0.063
3	0.43	6.22	0.126	0.066	0.044
4	0.62	2.30	0.253	0.073	0.069
5	0.43	0.61	0.074	0.014	0.018
6	—	0.23	0.027	0.009	0.009
		$\sum_1^6 \beta_i =$	0.641	0.264	0.210

TABLE V Relative Fraction of Decay Heat after Reactor Shutdown

Operating time	Time after shutdown (cooling period) Fraction of thermal operating power (P/P_0)					
	1 sec	1 min	1 hr	1 day	30 days	90 days
30 days	0.061	0.035	0.012	4.7×10^{-3}	3×10^{-4}	1×10^{-4}
1 year	0.062	0.036	0.013	4.8×10^{-3}	9×10^{-4}	5×10^{-4}
Infinite	0.062	0.037	0.013	4.9×10^{-3}	1.8×10^{-3}	1.2×10^{-3}

must be removed in the spent fuel cooling pools for several years.

I. Nuclear Cross Sections and Reaction Rates

The probability of a neutron reaction is measured by a microscopic cross section (σ) which can be considered loosely as the effective target area of the single nucleus that the incident neutron must pass through to induce any reaction. Since a square centimeter is much too large to describe atomic nuclei, the unit for a cross section σ is expressed in barns where

$$1 \text{ barn} = 10^{-24} \text{ cm}^2$$

The unusual unit of barns supposedly came from a physicist noting that one isotope had a huge reaction probability that was "big as a barn door." Although the cross-section concept comes from the concept of cross-sectional area of the nuclei, some isotopes have a very large appetite for neutrons and therefore, a very large σ value that exceeds their actual size.

Individual cross sections can be added since each cross section is a probability of interaction. The total cross section, σ_T, is the sum of the absorption σ_a and scattering σ_s cross section. The absorption cross section is really the sum of the fission cross section σ_f and the radiative capture cross section σ_c where neutrons are parasitically absorbed. The total scattering cross section is made up of the elastic portion σ_{se} and the inelastic σ_{si} value. This can be described by the following equations:

$$\sigma_T = \sigma_a + \sigma_s$$
$$\sigma_a = \sigma_f + \sigma_c$$
$$\sigma_s = \sigma_{se} + \sigma_{si}$$

The ratio of the nonfission capture cross section to the fission cross section is an important parameter, α or the capture-to-fission ratio:

$$\alpha = \sigma_c/\sigma_f$$

This capture-to-fission ratio varies widely over incident neutron energy levels, and depends on each isotope, as shown on Table I: Since the fission and capture cross sections are very energy dependent, this ratio, $\alpha = \sigma_c/\sigma_f$ is a significant parameter that is used to determine which fissionable and fissile isotopes are utilized at particular neutron energies for fission reactor design. (Duderstadt and Hamilton, 1976).

The macroscopic cross section Σ (1/cm) is the product of the microscopic cross section σ (cm^2 and the material number density N (atoms/cm^{-3}):

$$\Sigma_x = N\sigma_x$$

where x represents any type of neutron interaction. The number density N is found by using Avagadros's number N_A and the atomic weight A and density D of the material:

$$N = DN_A/A$$

The inverse of the macroscopic cross section Σ_x is the average or mean free path (cm) between interaction type x.

$$\Sigma_x = 1/\lambda_x$$

Macroscopic cross sections can also be added for each material

$$\Sigma_T = \Sigma_f + \Sigma_c + \Sigma_{si} + \Sigma_{se} + \cdots \text{all possible interaction processes}, \Sigma_{xi}$$

Finally microscopic cross sections can be used to determine how a neutron beam intensity I is attenuated or reduced inside a small differential slice of the material using the first-order differential equation

$$dI = -I\Sigma_x\, dx = -I\sigma N\, dx$$

Using I_0 as the initial neutron beam intensity, the rate of neutron interactions decreases exponentially inside the material as a first-order differential equation:

$$\frac{dI}{dx} = -I_0\Sigma_T \exp(-\Sigma_T x)$$

Note that the total cross section is used since all mechanisms for removing neutrons must be considered.

The rate of neutron interactions depends on the macroscopic cross section, the neutron density, i.e., the number of neutrons per cubic centimeter, and the neutron velocity.

The reaction rate, in units of neutrons per cubic centimeter per second is

$$R = \Sigma n v = \Sigma \varphi$$

where the neutron flux φ is defined as the product of the neutron density and the velocity. The flux φ has units of neutrons per square centimeter per second and represents the total number of neutrons that pass through a given area per second.

Nuclear cross sections are used to evaluate the design, safety, and behavior of fission processes in research and power reactors. These cross sections are dependent on the particular isotope, incident neutron energies, and temperature of the material itself. As the temperature of a fuel or any system material increases, the internal energy of the atoms themselves are increased making it harder for incident neutrons to interact with the nuclei. Thus, as the isotope's temperature is increased, the probability of neutron interaction is changed and its cross section Σ_T usually is reduced.

IV. STEADY-STATE FISSION CHAIN REACTIONS

Fission reactions can either be designed to be controlled as inside a nuclear reactor or uncontrolled as with a neutron bomb. Various important parameters must be evaluated to design a controlled neutron chain reaction. A reactor system uses fissile and other materials designed in a specific arrangement to support a neutron chain reaction. A chain reaction that is self-sustained requires that sufficient neutrons are produced as a function of time in each generation or time step during its operation. The steady-state chain reaction implies that the reactor system produces the same total number of fission reactions regardless of the particular moment in time, so that the time rate of change in the neutron density (dn/dt) is exactly equal to zero. Several traditional parameters have been used to evaluate fission reactor system behavior.

A. Infinite Multiplication Factor

When the nuclear change reaction exactly balances the fission neutron production rate with the neutron absorption and leakage in the reactor, the system is said to be critical, and the multiplication factor k, defined as:

$$k = \text{neutron production}/(\text{absorption} + \text{leakage})$$

is exactly equal to 1. If the production rate exceeds the loss rate, k is greater than 1 and the system is supercritical and the power will begin to increase. If the losses exceed the neutron production rate, the system is subcritical and k is less than 1. The reactivity of the system, ρ is a measure of the net amount of neutrons available in the system and is given as:

$$\rho = (k - 1)/k$$

So $\rho = 0$ for the just critical reactor, <0 for the subcritical reactor, and >0 for the supercritical reactor. A critical mass is the minimum quantity of fueled material (fuel, moderator, cladding, and structural material) that is capable of sustaining a fission chain reaction, once it has been initiated with a neutron from some external source. The exact critical mass depends on the fuel isotopes and moderator and reactor materials used as well as the isotopic enrichment used. In nuclear power reactors, k is designed to be greater than 1 in order to accommodate fuel depletion, neutron poisons, etc., so they can operate for long periods without refueling. Control rods and other neutron absorbing materials are used to exactly balance $k = 1$ over the reactor lifetime as the fuel burns up.

In the infinite reactor, no neutrons can escape the system so the infinite multiplication factor k_∞ is the ratio of the number of neutrons in the current generation or time step n' to the number in the previous generation, n:

$$k_\infty = n'/n$$

The reactor core materials composition (i.e., fuel enrichment, coolant and/or moderating material) determines the value of k_∞. An actual reactor cannot be infinite so that there is a finite probability that the neutrons will leak out or escape the system without interacting with the reactor materials. The effective multiplication factor k_{eff} is the product of the nonleakage probability P_{NL} and the infinite multiplication factor:

$$k_{eff} = k_\infty P_{NL}$$

The nonleakage probability depends on the reactor's geometry, critical mass, diffusion neutron distribution and the reactor materials, and their particular arrangement. Since the leakage characteristics of fast and thermal neutrons are different in reactors, the total nonleakage probability P_{NL} can be separated into the product of the fast and thermal nonleakage probabilities:

$$P_{NL} = P_{NL(thermal)} \cdot P_{NL(fast)}$$

B. Four-Factor Formula

The infinite multiplication factor can be evaluated as the product of the fast fission factor, ε, the resonance escape probability, p, the thermal utilization factor, f, and the neutron reproduction factor, η, or

$$k_\infty = \varepsilon p f \eta$$

This equation can be described in words with n representing neutrons as a product of each factor:

$k_\infty = \varepsilon$ {total fast n/fast n produced from thermal fission} ×
p {thermal n that avoid resonances/total fast n} ×
f {thermal n absorbed in fuel/thermal n absorbed everywhere} ×
η {fast n from thermal fission/thermal n absorbed in fuel}.

The resonance escape probability p expresses the probability that a neutron will escape resonance capture and will survive and become a thermal (low energy) neutron; thus, p is the ratio of the total number of thermal neutrons to the total fast neutrons, and must be less than or equal to 1.

The thermal neutron utilization factor, f, is the ratio of the number of neutrons absorbed in the fuel versus the total number of absorptions everywhere in the reactor, i.e., in the fuel, moderator, cladding, and other reactor materials. The value of f depends on the neutron distributions within the core, in terms of fast and thermal neutrons flux ratios, and the relative concentrations of the materials. If the fuel is uniformly distributed, or homogenous, then f can be defined by using the macroscopic absorption cross sections as:

$$f = \Sigma_{abs}(\text{fuel})/\{\Sigma_{abs}(\text{fuel}) + \Sigma_{abs}(\text{moderator}) + \Sigma_{abs}(\text{cladding}) + \text{etc.}\}$$

But if the fissile material is lumped, or segregated heterogenously, as in actual reactors, then the neutron density distribution, $n(r)$, or flux distribution, $\varphi(r)$ are not uniform and the method of calculating f and p becomes very complex (Duderstadt and Hamilton, 1976 and Lamarsh, 1966). Also, it is important that what should be considered as fuel is clearly defined. Although the fuel could just be considered only the thermally fissile isotopes, as applied to thermal reactors, it is now more common to consider all of the heavy metal isotopes as fuel so that the fuel is independent of reactor type (i.e., fast or thermal) so that any fissions produced by transuranic isotopes, e.g., Pu-239, can be counted. This is important for the analysis of actual power reactors where fertile isotopes can absorb neutrons and become fissile or fissionable isotopes.

The fast fission factor ε is defined as the ratio of the total number of fast neutrons to the number of fast neutrons induced by the thermal fission process, and depends on the particular isotopes, the fission-to-capture ratio α, moderator, fuel enrichment, and core geometry used. For the homogeneous reactor core, ε is close to 1.0. As the fuel is enriched and lumped together in fuel rods or plates, ε increases to approximately 1.2.

The reproduction factor η represents the number of fast neutrons produced per thermal neutron absorbed in the fuel, and used to be known as the thermal fission factor, since it was used for thermal reactor designs, but now can be used for both fast and thermal neutron reactors. The value of η is proportional to the average number of neutrons produced per fission, ν and is given by:

$$\eta = \nu\{\Sigma_{fission}(\text{fuel})/\Sigma_{abs}(\text{fuel})\}$$

For the pure fissile material, the microscopic cross sections can be used directly:

$$\eta = \nu\{\sigma_{fission}/(\sigma_{fission} + \sigma_{capture})\} = \nu/(1+\alpha))$$

Table I gives the values of η, ν, and α for important fissile and fissionable isotopes. By comparing the specific values of these important parameters, it becomes evident why early reactors were made using U-235 for thermal reactors and U-239 for fast reactors, etc.

C. Six-Factor Formula

For the finite reactor, the effective multiplication factor can now be described using six factors by using the four-factor formula and the previous equations:

$$k_{eff} = k_\infty P_{NL} = \varepsilon p f \eta P_{NL(thermal)} P_{NL(fast)}$$

It is important to note that the finite reactor geometry and fuel/moderator configuration impacts all the factors except η and ε which only depend on the fuel isotopes used.

D. Fission Reactor Theory

The fission neutron production rate is dependent on the neutron energy spectrum (i.e., neutron density as a function of energy distribution) and the concentration of fissile, fertile, and fissionable materials, and their geometric placement, and the moderator and reactor structural materials. Detailed calculations are needed to determine the exact conditions for maintaining a critical mass. The materials concentrations or ratios between the fuel and moderator can be used to determine whether a particular combination can even sustain a critical reaction, i.e., that k_∞ can be equal or greater than 1.0 for the infinite system. The geometric analysis involves determining the how and where the fast neutrons are slowed down in the moderator and reflector and become thermal neutrons that can be used for producing more fission reactions. Various reactor theory and analysis methods have been developed to understand how to efficiently produce neutrons and fission reactions in the various reactor configurations using the optimal amount of fuel to sustain the chain reaction over months of reactor operations.

In order to sustain a neutron chain reaction in a nuclear reactor, the design engineer must balance the neutron production rate with the losses of neutrons in the reactor structures through parasitic absorption, and neutrons escaping or leaking out of the reactor core. For example, natural uranium can only be made to sustain a chain reaction, or "go critical" in a mixture of heavy water (deuterium oxide) since natural water has hydrogen that has a large parasitic absorption cross section. But natural uranium can be enriched to have a larger fraction of U-235 so that water can be used as a moderator to slow down or "moderate" the fast neutrons to thermal energy levels so that more U-235 fissions can occur. Thus, to achieve a sustained fission chain reaction in a reactor, a detailed balance between four competing processes is needed: (1) fission of the fissile nuclei (e.g., U-235) with the emission of more neutrons than those captured, (2) nonfission capture of neutrons by other fuel materials (fertile or fissionable), (3) nonfission capture of neutrons by other materials, and (4) the escape or leakage of neutrons outside of the core without any capture processes. If the loss of neutrons in the last three processes is less than or equal to the surplus of neutrons created in the first fission process, then a chain reaction occurs and the reactor will have a self-sustained reaction; otherwise it does not.

Nuclear engineers must determine which materials must be used to moderate the fission neutrons, remove the thermal heat from the fuel, and how to arrange the fuel in the proper geometry, its isotopic content to keep the chain reaction going, etc. Reactor design is a complex process that involves understanding the fission reaction behavior, but also neutron and thermal-hydraulic phenomena, physical and chemical limitations of the materials selected, capabilities of the reactor, heat removal, and engineered safety systems, as well as constraints imposed by safety requirements, control mechanisms, and human-machine interactions.

SEE ALSO THE FOLLOWING ARTICLES

ATOMIC PHYSICS • NUCLEAR ENERGY, RISK ANALYSIS • NUCLEAR FACILITIES EMERGENCY PLANNING • NUCLEAR POWER REACTORS • NUCLEAR REACTOR MATERIALS AND FUELS • NUCLEAR REACTOR THEORY • NUCLEAR SAFEGUARDS • RADIOACTIVE WASTE DISPOSAL • RADIOACTIVITY

BIBLIOGRAPHY

Duderstadt, J. J., and Hamilton, L. J. (1976). "Nuclear Reactor Analysis," John Wiley and Sons, New York.

Foster, A. R., and Wright, R. L., Jr. (1983). "Basic Nuclear Engineering," 4th ed., Allyn and Bacon, Boston.

Glasstone, S., and Sesonske, A. (1967). "Nuclear Reactor Engineering," Van Nostrand Reinhold, New York.

Kaplan, I. (1962). "Nuclear Physics," Addison-Wesley, Reading, Massachusetts.

Lamarsh, J. R. (1966) "Introduction to Nuclear Reactor Theory," Addison-Wesley, Reading, Massachusetts.

Lamarsh, J. R. (1983) "Introduction to Nuclear Engineering," 2nd ed., Addison-Wesley, Reading, Massachusetts.

Meyerhof, W. E. (1987). "Elements of Nuclear Physics," McGraw-Hill, New York.

United States Atomic Energy Commission (USAEC) (1963). "Reactor Physics Constants," 2nd ed., Argonne National Laboratory, ANL-5800, USAEC Division of Technical Information, Washington, D.C.



Health Physics

John W. Poston, Sr.
Texas A&M University

I. Early History and Development
II. The Health Physics Society
III. The Health Physics Professional

GLOSSARY

This glossary is intended to define a few words in common use in the United States at this time. It is not intended to be exhaustive. For more definitions and concepts, the reader is referred to publications of the National Council on Radiation Protection and Measurements (NCRP) and federal agencies such as the U.S. Nuclear Regulatory Commission (NRC).

Absorbed dose Amount of energy deposited by ionizing radiation in a material per unit mass of the material; usually expressed in the special radiological unit rad or in the SI unit gray.

Dose equivalent Product of the absorbed dose, the quality factor, and other modifying factors; used to express the effects of radiation absorbed dose from the many types of ionizing radiation on a common scale; the special radiological unit is the rem and the equivalent SI unit is the sievert.

Dosimeter Any device worn or carried by an individual for the purpose of establishing the total exposure, absorbed dose, or dose equivalent (or rates) in an area or to the individual while occupying the area.

Dosimetry Theory and application of principles and techniques with the measurement of ionizing radiation.

Epilation Loss of hair due to damage to the follicles in the skin; temporary epilation occurs for acute exposures in the range of 300 to 500 rads, with permanent epilation occurring above about 700 rads.

Erythema Reddening of the skin due to exposure to radiation, similar to sunburn or theremal burns, depending on severity of exposure; occurs for acute exposures in the range 600 to 800 rads.

Exposure Quantity defined as the charge produced in air by photons (X or gamma-rays) interacting in a volume of air with a known mass; the special radiological unit is the roentgen and the SI unit is coulombs per kilogram. Also a general term used to indicate any situation in which an individual is in a radiation field.

Health Physics The study and practice of radiation safety and protection.

Ionization Process of removing (or adding) one or more electrons from (to) an atom or molecule.

Radiation As used in this article, a term indicating ionizing radiation, that is, nuclear particles and/or electromagnetic energy capable of causing ionization of atoms or molecules composing the material in which the radiation is interacting. Directly ionizing radiations are charged particles that interact directly with electrons in the material through Coulombic interactions; these radiations include alpha particles, beta particles,

electrons, and protons. Indirectly ionizing radiations are uncharged radiations, such as X rays, gamma rays, and neutrons, that must interact with material, producing a charged particle, which then causes further ionization.

THE TERM HEALTH PHYSICS probably has as many meanings as there are health physicists in the world. Health physics basically means radiation protection or radiation safety. The term itself was coined during the Manhattan Engineering District days of World War II and was intended to be somewhat nebulous. That is, there was a clear intent to hide, from those without a need to know, exactly what health physicists are and what they do. The words themselves were selected from a number of other possibilities, none of which was very explanatory. Dr. K. Z. Morgan, one of the original eight health physicists, defined health physics as the study and practice of radiation protection (he also defined it, perhaps not as facetiously as one might think, as "what health physicists do"). Others have defined health physics as "a science concerned with recognition, evaluation, and control of health hazards from ionizing and nonionizing radiation." Health physics is a profession dedicated to the protection of humans and their environment from the potentially harmful effects of radiation, while recognizing that there are potentially huge benefits to be derived from its use. A health physicist must have a broad background in physics, chemistry, biology, and mathematics. As the profession has grown, the base of knowledge has expanded to include many aspects of engineering, medicine, ecology, industrial hygiene, industrial safety, and so forth. Because of this, most health physicists concentrate their efforts (specialize) in one or a few areas and do not attempt to remain conversant in all areas encompassed by the term health physics.

I. EARLY HISTORY AND DEVELOPMENT

Even though the first group of health physicists was formed as part of the Manhattan Engineering District activities, it is clear that the concern for radiation safety can be traced essentially to the discovery of X rays in late 1895. It became immediately obvious to many early researchers that there were potentially harmful effects from exposure to the "new rays." These included such well-known scientists as Thomas A. Edison. Some have facetiously said that Wilhelm K. Roentgen may have been the first health physicist because he stood back and evaluated the situation while exposing another individual's hand to an X-ray beam. This famous photograph of the bones in the hand (and showing a ring on one finger) has been published in numerous textbooks on radiology, radiation protection, and biological effects of radiation.

Actually, many of the effects of radiation were noticed first in those using radiation equipment in their research. For example, it has been reported that during January 1896 E. H. Grubbe noticed erythema and edema on the back of his left hand. Later he suffered blistering with skin desquamation and epilation and, finally, the development of a scar. Effects such as these led many researchers to suggest the use of radiation to treat certain disorders such as rheumatism, skin disorders, and cancer.

Morgan, in his review of the early history, takes the position that Grubbe may have been the first health physicist. Based on his personal experience described above, Grubbe decided to use the destructive power of X rays to treat cancer. On January 29, 1896, he treated a patient with carcinoma of the breast with X rays from his Crookes tube. He used a lead shield to protect the rest of the patient's body. The use of such shields remains common practice during the diagnostic and therapeutic uses of radiation.

In 1899 the British Roentgen Society established a committee to collect data on the effects of X rays. Kathren and Tarr, in their historical review, point out that this effort was hampered by the belief that X rays were harmless. Nevertheless, this effort was almost certainly the first attempt to bring some order to the area of radiation protection.

No formal actions related to radiation protection were taken in the United States until late 1920. On September 14, 1920, the American Roentgen Ray Society established a standing committee on radiation protection. Recommendations of this committee were adopted at the annual meeting of the American Roentgen Ray Society in 1922. These recommendations were preceded by a set of similar recommendations published by the British X-ray and Radium Protection Committee in 1921. The title of the British committee indicates clearly the scope of the radiation protection concerns before the discovery and widespread use of nuclear energy.

Efforts to establish a more formal set of recommendations for use in radiation protection continued at both the national and international levels during the 1920s and 1930s. In 1925, at the First International Congress on Radiology, there was an extensive discussion on the need for radiation quantities and units. An ad-hoc group was established to study the matter and was instructed to report their findings at the next congress, scheduled for 1928 in Stockholm. Taylor reported that membership on the Units Committee was large and that the committee was quite unwieldy. This committee was the precursor of the International Commission on Radiological Units and Measurements (ICRU).

At the Stockholm congress, an international radiation protection committee was organized. The committee was called the International Committee on X-ray and Radium Protection and consisted of only five members; later a sixth member was added. This committee was the precursor of the International Commission on Radiological Protection (ICRP). Apparently, the formation of such a committee had been discussed at the first congress but no formal steps had been taken. Taylor pointed out in his review that, at the time of formation of this committee, the problem of units and quantities was considered much more important than that of radiation protection.

In 1929, in the United States, a committee called the Advisory Committee on X-ray and Radium Protection was formed. This committee was an outgrowth of discussions between leaders of the American Roentgen Ray Society, the Radiological Society, and the Radium Society. These societies agreed to consolidate into one committee the radiation protection activities of the three organizations. The National Bureau of Standards was selected as the centralized location for committee activities. Taylor pointed out that during the formation of the committee the question of to whom the committee was advisory was carefully avoided. However, it was always implied that the committee had a responsibility to the entire profession. This committee became the National Committee on Radiation Protection and Measurements and, later, the National Council on Radiation Protection and Measurements (NCRP). In 1964, the NCRP was chartered by Congress and charged with the responsibility of providing scientific and technical guidance on radiation protection issues.

Both the international committee and the national committee in the United States were active throughout the 1930s. The main thrust of these committees was to expand the earlier recommendations. The international committee's work included information on general recommendations, working hours, X-ray shielding, radium protection, and electrical precautions. In the United States, the first set of detailed recommendations on X-ray protection were published in 1931. These were followed, in 1934, with a set of recommendations on radium.

Arthur H. Compton had the foresight that led to the profession called health physics. He recognized that severe radiation protection problems might accompany the development of atomic energy. Therefore, in late 1942 he called together eight individuals who became the original group of "health physicists." They had a variety of backgrounds (e.g., medical physics and cosmic-ray research), but all were familiar with ionizing radiation. As the profession grew, each of these individuals made significant contributions to the profession, and two of the eight served as president of the Health Physics Society (formed in the middle 1950s).

II. THE HEALTH PHYSICS SOCIETY

In June 1955 a Health Physics Conference was held at Ohio State University. This meeting marked the beginning of the Health Physics Society. Prior to this time there was no formal organization with radiation protection as its sole interest, although many health physicists affiliated with the American Industrial Hygiene Association (AIHA) because of mutual interests in health protection. At this meeting a group of nearly 200 health physicists voted to form a professional society, and later during the conference a business meeting was held to elect a slate of interim officers and board of directors.

The second meeting of this new society was held in June 1956 in Ann Arbor, Michigan. The name Health Physics Society was selected by a majority vote of the members present on June 25, 1956. Two other names were also suggested, Society for Radiation Protection and Radiation Protection Society, but there was overwhelming support for the term health physics. Many years later, on October 1, 1969, the society was incorporated in the State of Tennessee. From this initial group of less than 200, the society has grown steadily over the years and; in 1999, the membership totaled more than 6000. Although the society is based in the United States, and many other countries have similar organizations, the Health Physics Society is recognized as an important radiation protection organization, with nearly 5% of its members from about 50 foreign countries.

The Health Physics Society has as its primary objective the development of scientific knowledge and practical means for protecting humans and their environment from the potentially harmful effects of radiation while allowing its use for the benefit of all humanity. Implicit in this primary objective is the need to disseminate information to individuals within the profession and in related fields, to improve public understanding of radiation protection matters, and to promote the profession of health physics.

At present, the society functions through its officers, board of directors, and 28 standing committees. Within the society there are nine "special interest" sections to which members may also belong. These include interest areas such as medical physics, radon, governmental, etc. The society holds annual and midyear topical meetings in which the exchange of scientific information on radiation protection is encouraged. In addition, the society

publishes a monthly newsletter for its members, publishes the scientific journal *Health Physics*, a supplement to the journal called *Operational Radiation Safety*, and produces standards on radiation protection through the national consensus standards process. The society has chartered 49 local chapters and 17 student chapters that function within regions of the country. The society was instrumental in forming the American Board of Health Physics (ABHP) and the National Registry of Radiation Protection Technologists (NRRPT). Although these are now separate entities, the society continues to provide strong support to these activities.

In addition, the society is affiliated with the International Radiation Protection Association (IRPA). This organization comprises nearly 60 radiation protection societies throughout the world.

III. THE HEALTH PHYSICS PROFESSIONAL

Health physicists are found in most activities involving the use of ionizing radiation, including research, education, medical uses of radiation, operational activities in industrial applications, consulting activities, and enforcement of government regulations. Although most health physicists are employed in only one of these areas, it is common for the professional to become involved in many of the above. There is always a need to educate employees and the general public concerning the hazards of radiation and methods of protection. A health physicist must ensure that government regulations regarding radiation exposure and related matters are followed and that legal limits are not exceeded. In addition, it is the health physicist's responsibility always to seek better ways of accomplishing the required tasks so that exposures to radiation are kept as low as possible, releases of material to the environment are appropriate, and all uses of radiation result in a positive benefit.

Research in health physics includes such subjects as the interaction of radiation with matter, natural and manmade radiation environments, the effects of radiation and radioactivity on living systems, and the design of new radiation detection systems (to name only a few). Most of these activities are centered in large national laboratories or universities across the country. Most national laboratories employ research health physicists as well as operational health physicists. Many universities have large offices of radiation safety to support the research activities of the faculty and staff. In addition, many large corporations have research activities that utilize radiation or radioactivity and require a health physicist.

Health physics is a course of study in a number of universities at both the baccalaureate and graduate levels. Many universities grant advanced degrees in health physics or related areas (physics, radiobiology, etc.). These courses of study are found in colleges of engineering, schools of public health, physics departments, and so forth. There seems to be no formal "home" for this curriculum. However, this situation also provides a certain interdisciplinary flavor to the profession, because each academic program is different and students can find the institution that best satisfies their needs. In addition, there is a large effort within the nuclear power industry devoted to education and training of the workforce. Federal regulations require that all workers receive a certain amount of training, and as the responsibility of the individual increases, the extent of the training also increases.

Within the medical community, health physicists may be responsible for all aspects of radiation protection. These responsibilities may include maintenance and calibration of all radiation-producing devices within the institution (e.g., X-ray machines, accelerators, isotopic sources, and radionuclide generators), personnel dosimetry, consultation on treatment plans with physicians, radioactive waste disposal, and radiation protection training. In addition, health physicists are responsible for ensuring that there is compliance with local, state, and federal regulations regarding all aspects of radiation protection.

Industrial uses of radiation and radioactivity usually focus on the nuclear electric generating industry. This industry employs a large number of health physicists with responsibilities in a wide variety of activities. These include routine operations and protection activities at the facility, personnel monitoring, internal dosimetry, respiratory protection, radioactive waste disposal, and emergency planning. In addition to the nuclear power industry, health physicists may be employed in any industry using radiation producing machines or radioactive materials. The potential users are too numerous to list here, but include manufacturers of automobiles, cigarettes, steel, aluminum, plastics, and even sandpaper.

Many health physicists are employed as consultants. They provide expertise in a number of areas including medical applications, radioactive waste disposal, employee training, and emergency planning. Consulting activities exist for qualified individuals in essentially every area of radiation protection.

In the United States, the Nuclear Regulatory Commission (NRC), as well as local and state authorities, is responsible for regulations governing most uses of radiation. Medical uses of nuclear radiation, with the exception of radionuclides, are not under the jurisdiction of the NRC. Such activities may be regulated by state and local

authorities. Health physicists are employed in all three governmental sectors and are charged with the responsibility of enforcing appropriate regulations on all licensed activities to protect the health and safety of the general public.

Health physics is an exciting and interesting profession; it requires a broad general understanding of a number of disciplines. Opportunities for employment exist within a number of other allied professional activities. Health physics and its related fields present the individual with daily challenges that require the application of professional judgment so that other work can proceed with safety.

Opportunities within the profession have increased dramatically over the past few years. Projections indicate that the demand will increase for the foreseeable future. Many of the early leaders of the profession have retired from active involvement, and a large number of active health physicists have been in the field for more than 20 years. The future supply and demand situation for qualified health physicists appears to be such that there will not be sufficient numbers available to meet the anticipated demand.

SEE ALSO THE FOLLOWING ARTICLES

DOSIMETRY • NUCLEAR ENERGY, RISK ANALYSIS • NUCLEAR FACILITIES EMERGENCY PLANNING • NUCLEAR RADIATION DETECTION DEVICES • NUCLEAR SAFEGUARDS • RADIATION PHYSICS • RADIATION SHIELDING AND PROTECTION • RADIOACTIVITY

BIBLIOGRAPHY

Brucer, M. (1990). "A Chronology of Nuclear Medicine, 1600–1989," Heritage Publications, St. Louis, MO.

Kathren, R. L., and Tarr, N. E. (1974). "The Origins of the Health Physics Society," *Health Physics* **26,** 419–428.

Morgan, K. Z., and Turner, J. E. (1967). "Principles of Radiation Protection," Wiley, New York.

Stannard, J. N. (1988). "Radioactivity and Health: A History," Battelle Memorial Institute, Columbus, OH.

Taylor, L. S. (1977). "Radiation Protection Standards," CRC Press, Boca Raton, FL.

Turner, J. E. (1986). "Atoms, Radiation, and Radiation Protection," Pergamon Press, New York.

Turner, J. E., Bogard, J. S., Hunt, J. B., and Rhea, T. A. (1988). "Problems and Solutions in Radiation Protection," Pergamon Press, New York.



Isotopes, Separation and Application

Emory D. Collins
Charles L. Ottinger
Oak Ridge National Laboratory

I. Isotopic Separation of Stable Isotopes
II. Radioisotope Production
III. Postirradiation Radiochemical Separations Processing
IV. Examples of Specific Isotope Production Processes
V. Industrial Applications of Isotope-Related Neutron Science

GLOSSARY

Brachytherapy Radiation treatment of cancer tumors by means of a sealed radiation source.

Calutron Type of electromagnetic machine designed to separate metal ions according to their mass as they are passed through a magnetic field. The term *calutron* was derived from the California University Cyclotron.

Half-life Characteristic constant of a radioactive isotope that denotes its rate of decay. The half-life of a specific radioisotope is the time required for half of its initial nucleus to decay.

Neutron activation analysis (NAA) Practice of bombarding a material with neutrons to create activation products from the components of the material and to utilize the radioactive emissions from the activation products to identify the components in the material. One or more of the radioactive emissions signals can be used in numerous applications, such as process control indicators.

Neutron radiography Practice of bombarding a material with neutrons and using a film exposure of the exiting neutrons to determine the shape of materials that did not absorb the neutrons. The process is similar to X-ray and γ-ray radiography, with this distinction: neutrons are absorbed by lower atomic weight materials, such as hydrogen atoms, whereas X rays and γ rays are absorbed by higher atomic weight materials.

Positron emission tomography (PET) Diagnostic imaging method in which a chemical compound of interest, labeled with a positron-emitting radioisotope, is injected into a patient and its biological distribution in

the body recorded as signals from a γ-ray detector array which surrounds the patient. A computer reassembles the signals into tomographic images that depict organ function and failure of organ systems in disease.

ALTHOUGH A FEW chemical elements have only one naturally occurring isotope, most consist of several isotopes, as shown in Table I. Each isotope of a given element contains a different number of neutrons in the nuclei of its atoms, thus giving the isotope a different atomic weight and slightly different physical properties. These different atomic weights and properties enable a separation of the isotopes to be possible, creating enriched isotopes. Various separations methods are described as follows. Table I also shows assays of typical enriched isotopes.

Only a very few of the naturally occurring isotopes (Table I) are radioactive, and those that are have very long half-lives. However, many radioactive isotopes of each element, with exponentially varying decay rates, can be produced artificially by bombardment of target isotopes with neutrons in nuclear reactors or charged particles or neutrons in accelerators. Each radioactive isotope produced decays at a specific rate by emission of one of the following particles or a combination of them: an α particle (helium nucleus; α decay), an electron or positron (β decay), or a photon (γ decay). In many cases, the target isotope or some of the isotopes produced are fissile and, upon capturing a neutron, undergo fission and split into two main fragments. This binary fission process can occur in many modes, thus producing a multitude of fission product isotopes. All of these events can occur simultaneously during the bombardment, thus producing a complex and highly radioactive mixture of residual target and isotope products. This mixture requires postbombardment, radiochemical separations processing to recover and purify the specific isotopes that are needed. A generic isotope production process is illustrated in Fig. 1. Note that waste treatment and disposal are inherent and necessary parts of this process.

The widely differing nuclear, chemical, and physical properties of the various enriched stable and radioisotope products have enabled a wide variety of beneficial uses to be developed in many research, medical, and industrial applications.

Isotope enrichment processes to separate the isotopes of a particular element are described first, followed by a discussion of target fabrication and irradiation in either a reactor or an accelerator, and then the radiochemical separations processing steps necessary to isolate the radioisotope of interest are presented. Finally, the widely varying beneficial uses of isotopes are described.

TABLE I Naturally Occurring Isotopes

Isotope	Natural abundance (%)	Typically enriched assay (%)
Aluminum-27	100	
Antimony-121	57.3	99
Antimony-123	42.7	99
Argon-36	0.337	99
Argon-38	0.063	95
Argon-40	99.6	99.9
Arsenic-75	100	
Barium-130	0.106	48
Barium-132	0.101	35
Barium-134	2.417	83
Barium-135	6.592	93
Barium-136	7.854	92
Barium-137	11.23	89
Barium-138	71.7	99
Beryllium-9	100	
Bismuth-209	100	
Boron-10	19.9	99
Boron-11	80.1	99
Bromine-79	50.69	98
Bromine-81	49.31	98
Cadmium-106	1.25	86
Cadmium-108	0.89	69
Cadmium-110	12.49	96
Cadmium-111	12.8	95
Cadmium-112	24.13	97
Cadmium-113	12.22[a]	96
Cadmium-114	28.73	98
Cadmium-116	7.49	98
Calcium-40	96.941	99.9
Calcium-42	0.647	93
Calcium-43	0.135	79
Calcium-44	2.086	98.5
Calcium-46	0.004	43
Calcium-48	0.187[a]	97
Carbon-12	98.9	99.9
Carbon-13	1.1	99
Cerium-136	0.19	43
Cerium-138	0.25	25
Cerium-140	88.48	99.5
Cerium-142	11.08[a]	92
Cesium-133	100	
Chlorine-35	75.77	99
Chlorine-37	24.23	98

continues

TABLE I (*continued*)

Isotope	Natural abundance (%)	Typically enriched assay (%)
Chromium-50	4.345	95
Chromium-52	83.789	99.7
Chromium-53	9.501	96
Chromium-54	2.365	94
Cobalt-59	100	
Copper-63	69.17	99.8
Copper-65	30.83	99.6
Dysprosium-156	0.06[a]	28
Dysprosium-158	0.1	20
Dysprosium-160	2.34	77
Dysprosium-161	18.9	93
Dysprosium-162	25.5	94
Dysprosium-163	24.9	95
Dysprosium-164	28.2	98
Erbium-162	0.14	27
Erbium-164	1.61	73
Erbium-166	33.6	96
Erbium-167	22.95	91
Erbium-168	26.8	95
Erbium-170	14.9	95
Europium-151	47.8	92
Europium-153	52.2	96
Fluorine-19	100	
Gadolinium-152	0.20[a]	42
Gadolinium-154	2.18	66
Gadolinium-155	14.8	90
Gadolinium-156	20.47	96
Gadolinium-157	15.65	90
Gadolinium-158	24.84	95
Gadolinium-160	21.86	97
Gallium-69	60.1	99
Gallium-71	39.9	99
Germanium-70	20.5	98
Germanium-72	27.4	97
Germanium-73	7.8	94
Germanium-74	36.5	98
Germanium-76	7.8	92
Gold-197	100	
Hafnium-174	0.162[a]	13
Hafnium-176	5.206	68
Hafnium-177	18.606	89
Hafnium-178	27.297	93
Hafnium-179	13.629	84

continues

TABLE I (*continued*)

Isotope	Natural abundance (%)	Typically enriched assay (%)
Hafnium-180	35.1	93
Helium-3	0.000138	99.9
Helium-4	99.999862	
Holmium-165	100	
Hydrogen-1	99.985	99.99
Hydrogen-2	0.015	99.9
Indium-113	4.3	96
Indium-115	95.7[a]	99.99
Iodine-127	100	
Iridium-191	37.3	98.17
Iridium-193	62.7	99.45
Iron-54	5.8	96
Iron-56	91.72	99.9
Iron-57	2.2	88
Iron-58	0.28	72
Krypton-78	0.35	99
Krypton-80	2.25	97
Krypton-82	11.6	92
Krypton-83	11.5	99
Krypton-84	57	92
Krypton-86	17.3	99
Lanthanum-138	0.09[a]	7
Lanthanum-139	99.91	99.99
Lead-204	1.4[a]	70
Lead-206	24.1	99
Lead-207	22.1	92
Lead-208	52.4	98
Lithium-6	7.5	95
Lithium-7	92.5	99.9
Lutetium-175	97.41	99.9
Lutetium-176	2.59[a]	73
Magnesium-24	78.99	99.9
Magnesium-25	10	97
Magnesium-26	11.01	99
Manganese-55	100	
Mercury-196	0.14	40
Mercury-198	10.02	91
Mercury-199	16.84	88
Mercury-200	23.13	95
Mercury-201	13.22	92
Mercury-202	29.8	96

continues

TABLE I (*continued*)

Isotope	Natural abundance (%)	Typically enriched assay (%)
Mercury-204	6.85	94
Molybdenum-92	14.84	97
Molybdenum-94	9.25	91
Molybdenum-95	15.92	96
Molybdenum-96	16.68	96
Molybdenum-97	9.55	92
Molybdenum-98	24.13	96
Molybdenum-100	9.63	97
Neodymium-142	27.13	92
Neodymium-143	12.18	91
Neodymium-144	23.80[a]	97
Neodymium-145	8.30[a]	89
Neodymium-146	17.19	97
Neodymium-148	5.76	94
Neodymium-150	5.64[a]	96
Neon-20	90.51	
Neon-21	0.27	
Neon-22	9.22	
Nickel-58	68.27	99.9
Nickel-60	26.1	99
Nickel-61	1.13	91
Nickel-62	3.59	96
Nickel-64	0.91	94
Niobium-93	100	
Nitrogen-14	99.634	99.9
Nitrogen-15	0.366	98
Osmium-184	0.02[a]	5.45
Osmium-186	1.58[a]	61
Osmium-187	1.6	70
Osmium-188	13.3	94
Osmium-189	16.1	94
Osmium-190	26.4	95
Osmium-192	41.0	95
Oxygen-16	99.762	99.9
Oxygen-17	0.038	50
Oxygen-18	0.2	95
Palladium-102	1.02	69
Palladium-104	11.14	95
Palladium-105	22.33	97
Palladium-106	27.33	98
Palladium-108	26.46	98
Palladium-110	11.72	96
Phosphorus-31	100	

continues

TABLE I (*continued*)

Isotope	Natural abundance (%)	Typically enriched assay (%)
Platinium-190	0.01[a]	4
Platinium-192	0.79	57
Platinium-194	32.9	97
Platinium-195	33.8	97
Platinium-196	25.3	97
Platinium-198	7.2	95
Potassium-39	93.2581	99.9
Potassium-40	0.0117[a]	83
Potassium-41	6.7302	98
Praseodymium-141	100	
Rhenium-185	37.4	96
Rhenium-187	62.60[a]	99.2
Rhodium-103	100	
Rubidium-85	72.165	99.7
Rubidium-87	27.835[a]	98
Ruthenium-96	5.52	98
Ruthenium-98	1.88	89
Ruthenium-99	12.7	98
Ruthenium-100	12.6	97
Ruthenium-101	17.0	97
Ruthenium-102	31.6	99
Ruthenium-104	18.7	99
Samarium-144	3.1	91
Samarium-147	15.0[a]	98
Samarium-148	11.3[a]	96
Samarium-149	13.8[a]	97
Samarium-150	7.4	95
Samarium-152	26.7	98
Samarium-154	22.7	98
Scandium-45	100	
Selenium-74	0.9	66
Selenium-76	9.0	96
Selenium-77	7.6	93
Selenium-78	23.6	97
Selenium-80	49.7	99
Selenium-82	9.2[a]	96
Silicon-28	92.23	99.8
Silicon-29	4.67	95
Silicon-30	3.1	94
Silver-107	51.839	98
Silver-109	48.161	99
Sodium-23	100	
Strontium-84	0.56	80

continues

TABLE I (*continued*)

Isotope	Natural abundance (%)	Typically enriched assay (%)
Strontium-86	9.86	95
Strontium-87	7.0	90
Strontium-88	82.58	99.8
Sulfur-32	95.02	99.8
Sulfur-33	0.75	69
Sulfur-34	4.21	96
Sulfur-36	0.02	25
Tantalum-180*m*	0.012[a]	0.3
Tantalum-181	99.988	
Tellurium-120	0.096	51
Tellurium-122	2.6	96
Tellurium-123	0.908[a]	83
Tellurium-124	4.816	96
Tellurium-125	7.14	95
Tellurium-126	18.95	98
Tellurium-128	31.69[a]	99
Tellurium-130	33.80[a]	99
Terbium-159	100	
Thallium-203	29.524	95
Thallium-205	70.476	98
Thorium-232	100[a]	
Thulium-169	100	
Tin-112	0.97	74
Tin-114	0.65	61
Tin-115	0.36	32
Tin-116	14.53	95
Tin-117	7.68	89
Tin-118	24.22	97
Tin-119	8.58	84
Tin-120	32.59	98
Tin-122	4.63	92
Tin-124	5.79	94
Titanium-46	8.0	81
Titanium-47	7.3	80
Titanium-48	73.8	99
Titanium-49	5.5	75
Titanium-50	5.4	75
Tungsten-180	0.13[a]	8
Tungsten-182	26.3	94
Tungsten-183	14.3	81
Tungsten-184	30.67[a]	94
Tungsten-186	28.6	97
Uranium-234	0.0055[b]	
Uranium-235	0.720[b]	93.5
Uranium-238	99.2745[b]	99.9

continues

TABLE I (*continued*)

Isotope	Natural abundance (%)	Typically enriched assay (%)
Vanadium-50	0.25[a]	36
Vanadium-51	99.75	
Xenon-124	0.1	99.9
Xenon-126	0.09	99
Xenon-128	1.91	
Xenon-129	26.4	
Xenon-130	4.1	
Xenon-131	21.2	
Xenon-132	26.9	
Xenon-134	10.4	51
Xenon-136	8.9	94
Ytterbium-168	0.13	19
Ytterbium-170	3.05	78
Ytterbium-171	14.3	95
Ytterbium-172	21.9	97
Ytterbium-173	16.12	92
Ytterbium-174	31.8	98
Ytterbium-176	12.7	96
Yttrium-89	100	
Zinc-64	48.6	99.8
Zinc-66	27.9	98
Zinc-67	4.1	91
Zinc-68	18.8	98
Zinc-70	0.6	76
Zirconium-90	51.45	98
Zirconium-91	11.22	91
Zirconium-92	17.15	98
Zirconium-94	17.38	98
Zirconium-96	2.80[a]	95

[a] Long-lived radioisotope with a half-life greater than 10^9 years.
[b] Long-lived radioisotope with a half-life greater than 10^5 years.

I. ISOTOPIC SEPARATION OF STABLE ISOTOPES

The processes used to separate isotopes depend to a great extent on the physical properties of the chemical element that is to be separated. For gaseous elements and compounds, slight variations in volatility or diffusion properties are utilized. Cryogenic multistage distillation is the method used to separate the lightweight elements hydrogen, carbon, nitrogen, and oxygen. Thermal diffusion columns are effective for the isotopic separation of the heavier gases such as neon, argon, krypton, xenon, and chlorine. Gas centrifuges are used effectively for the

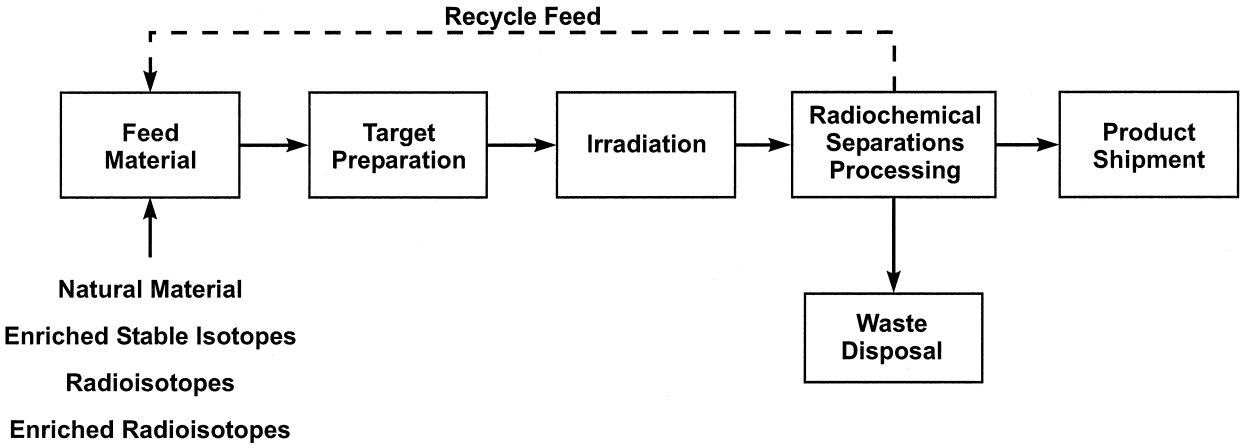

FIGURE 1 Generic steps for radioisotope production.

separation of gaseous elements and compounds of a variety of elements. Some of the elements separated isotopically in gas centrifuges include uranium (as UF_6), sulfur (as SF_6), and zinc (as diethyl zinc). Electromagnetic mass separators called calutrons are used for simultaneous isotopic separation and collection of all isotopes of more than 50 metallic elements, with high efficiencies but with relatively low capacities. Preferential ion resonance methods such as the advanced vapor laser isotope separation (AVLIS) process and the plasma separation process (PSP) were developed more recently for separation of uranium isotopes and have the potential to be used in the separation of isotopes of other elements. Special isotope separation processes that utilize combinations of chemical reactions, electrolysis, ion exchange, and distillation have been developed and used for the isotopic separations of lithium, boron, and hydrogen. Most of the isotope separation processes are described extensively by Benedict, Pigford, and Levi in their classical text, *Nuclear Chemical Engineering*. Only a few enriched stable isotopes are used in such large amounts that production facilities dedicated to only one, or perhaps a few, isotope product can be justified. Such facilities are those dedicated to production of either (1) deuterium; (2) the isotopes of carbon, nitrogen, and oxygen; (3) lithium; or (4) boron. Most of the enriched stable isotopes are produced in relatively small amounts at multiproduct facilities such as the electromagnetic calutron mass separators illustrated in Fig. 2; only the calutron facilities located in Oak Ridge, Tennessee, and in two locations in Russia have this proven capability. The Oak Ridge facility has not operated since January 1998, and its future is in jeopardy because of inadequate funding. However, hundreds of product shipments are made from inventories of past production and are widely used as targets for production of radioisotopes. Also, in many cases of basic scientific research, enriched stable isotopes are used in the fields of physics, chemistry, geosciences, toxicology, medicine, and nutrition.

II. RADIOISOTOPE PRODUCTION

A 1994 study by Management Information Service, Inc., showed the following beneficial economic and employment impacts of radioisotopes and radioactive materials in 1991: $257 billion in total industry sales; 3.7 million jobs; $11 billion in total industry profits; and $45 billion in federal, state, and local government tax revenues. However, the revenues received by the isotope producers total significantly less than 1% of the total beneficial impact.

Radioisotopes are produced mainly in research reactors and dedicated accelerators. In a study conducted in 1998 by the Nuclear Energy Agency of the Organization for Economic Cooperation and Development, a total of 75 research reactors and 188 accelerators, located in approximately 50 countries throughout the world, were identified as producers of radioisotopes. Most of the reactors are government owned and produce radioisotopes during only part of their operating time; however, more than 75% of the accelerators are privately owned and dedicated to the production of special radioisotopes. About 70% of the accelerators are the lower-energy level ($\sim$11-MeV) machines designed and operated for the production of short-lived positron emission tomography (PET) radioisotopes. The number of accelerators in use, especially to produce PET isotopes, is growing rapidly, while the number of research reactors is decreasing. For example, in the United States during the last 8 years, the number of research reactors capable of producing radioisotopes has decreased from nine to five. Currently, the Advanced Test Reactor at Idaho National Engineering and Environmental

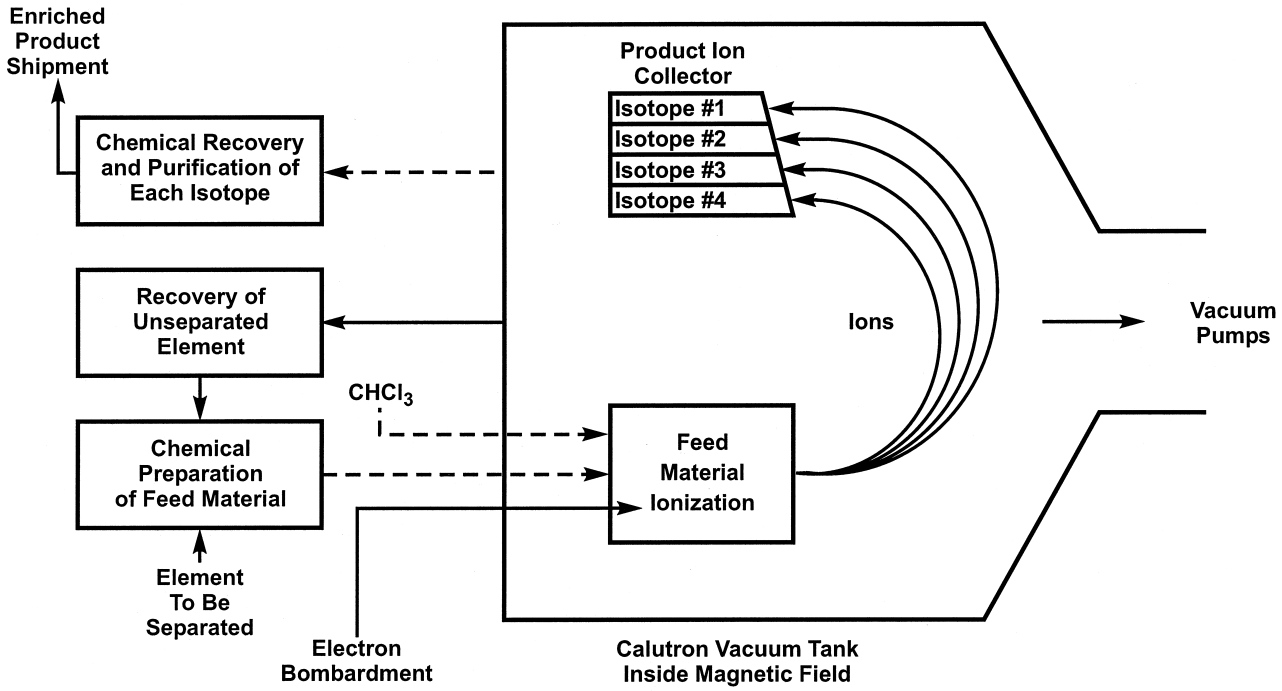

Note:
Operation is batchwise with periodic shutdown to replace feed ionization units or product ion collectors.

FIGURE 2 Diagram of the calutron isotope enrichment process.

Laboratory, the High Flux Isotope Reactor (HFIR) at Oak Ridge National Laboratory (ORNL), and the Missouri University Research Reactor are the predominant source of reactor-produced radioisotopes in the United States.

A. Reactor-Produced Radioisotopes

Many radioisotopes can be and have been produced for research studies and various applications. Some, but not nearly all, typical reactor-produced radioisotopes are listed in Table II, along with the target materials and neutron reactions that are used for their production. All of the production methods follow the pattern shown in Fig. 1. Production steps for a few of the widely used radioisotopes are described to illustrate specific considerations that must be provided for. In general, reactor-produced radioisotopes fall into two classes: neutron activation products and fission products.

For neutron activation products, the irradiation target is usually nonradioactive and often is an enriched stable isotope. The most common reaction is the neutron, γ (n,γ) reaction, which produces a radioisotope of the same element as the target. Other neutron reactions that are followed by particle emissions produce radioisotopes of elements different from the target. After some n,γ reactions, the resulting radioisotope product (such as ^{192}Ir) can be used without postirradiation radiochemical separations. However, in other cases, the n,γ reactions produce undesirable radionuclides, either by secondary nuclear reactions or by reactions with impurities in the target, thus requiring radiochemical processing to isolate and purify the radioisotope product. With a fissionable target, typically ^{235}U, the desired product isotopes are produced as fission products along with a multitude of undesirable fission products. In such cases, postirradiation radiochemical processing is imperative.

B. Accelerator-Produced Radioisotopes

These radioisotope products are used primarily for medical or research applications, and the mass amounts are typically smaller than those of reactor-produced radioisotopes. Table III lists several of the major medical radioisotopes produced in accelerators, and Table IV gives an indication of the wide variety and quantities of radioisotopes that can be produced in a typical nondedicated proton-beam accelerator of a medium power level (23 MeV) and high current ($\leq$2 mA). The proton absorption–neutron emission (p,n) reaction is the most common and produces a radioisotope of the same atomic weight but of a different element than the target.

TABLE II Typical Reactor-Produced Radioisotopes

	Radioisotope Product	Target	Reaction(s)	Product half-life	Applications
For industrial applications	^{60}Co	^{59}Co (natural)	n,γ	5.27 years	γ radiation, sterilization
	^{63}Ni	^{62}Ni (enriched)	n,γ	100 years	Thermoelectric, instrument power
	^{137}Cs	^{235}U (enriched)	n, fission	30.2 years	γ radiation, sterilization
	^{192}Ir	^{191}Ir (natural Ir)	n,γ	78.3 days	γ-radiography nondestructive examinations
	^{238}Pu	^{237}Np	2n, β	87.7 years	Thermoelectric power source
	^{241}Am	^{241}Pu	β	432 years	Smoke detectors
	^{252}Cf	Cm	See Fig. 5	2.6 years	Portable neutron source applications
For medical applications	^{32}P	^{31}P (natural P)	n,γ	14.3 days	Cancer therapy
	^{89}Sr	^{88}Sr (enriched)	n,γ	50.6 days	Bone cancer pain palliation
	^{99}Mo/^{99m}Tc	^{235}U (enriched)	n, fission/β	66 hr/6.0 hr	Diagnostics
	^{103}Pd	^{102}Pd (enriched)	n,γ	17.0 days	Cancer therapy
	^{125}I	^{124}Xe	n,γ	60.1 days	Cancer therapy
	^{131}I	^{235}U (enriched)	n, fission	8.0 days	Thyroid disease therapy
For research applications	^{188}W/^{188}Re	^{186}W (enriched)	2n,γ/β	69.4 days/17.0 hr	Cancer therapy
	^{248}Cm	Cm	See Fig. 5	340,000 years	Nuclear chemistry and physics
	^{249}Bk	Cm	See Fig. 5	320 days	Nuclear chemistry and physics
	^{249}Cf	Cm	See Fig. 5	351 days	Nuclear chemistry and physics
	^{253}Es	Cm	See Fig. 5	2.50 days	Nuclear chemistry and physics
	^{257}Fm	Cm	See Fig. 5	101 days	Nuclear chemistry and physics

Targets for radioisotope production are relatively small, typically ranging from a few milligrams to several grams, and the postirradiation radiochemical processing steps used are essentially laboratory scale. Thus, process wastes are usually low volume.

C. Radioisotope Generators

Often in nuclear medicine applications, the radioisotope needed for the medical procedures must have a high isotopic purity (called "carrier-free") and a short half-life. If the needed radioisotope is itself the decay product of a parent isotope having a longer half-life, then a radioisotope generator containing the parent isotope can be prepared and transported to the site of use (such as a commercial nuclear medical laboratory or radiopharmacy). At the user site, the daughter radioisotope can be periodically removed in high purity and concentration from the generator as needed. The net effect is that the shorter-lived daughter radioisotope is available with the longer half-life of the parent radioisotope. The most widely used radioisotope generator system is the ^{99}Mo/^{99m}Tc generator listed in Table II. Other such systems are the ^{188}W/^{188}Re generator (Table II) and the ^{68}Ge/^{68}Ga and ^{82}Sr/^{82}Rb generators (Table III). Radioisotope generator systems are described more extensively by Knapp and Mirzadeh in their publication entitled "The Continuing Role of Radionuclide Generator Systems for Nuclear Medicine."

III. POSTIRRADIATION RADIOCHEMICAL SEPARATIONS PROCESSING

The processing steps commonly required include (1) disassembly of the target encapsulation; (2) dissolution of

TABLE III Typical Accelerator-Produced Medical Radioisotopes

Radioisotope product	Target	Reaction(s)	Product half-life	Applications
^{18}F	^{18}O (enriched)	n,p	110 min	PET diagnostics
^{67}Ga	^{68}Zn (enriched)	p,γ	3.26 days	Diagnostics, cancer therapy
^{68}Ge/^{68}Ga	KBr	p, spallation	271 days/68.3 min	Myocardial perfusion, calibration of PET cameras
^{82}Sr/^{82}Rb	^{92}Mo	p, spallation	25.6 days/6.2 hr	PET diagnostics
^{103}Pd	^{103}Rh (natural Rh)	p,n	17.0 days	Cancer therapy
^{123}I	^{123}Te	p,n	13.2 hr	Cancer therapy
^{201}Tl	^{203}Tl (enriched)	p,3n	73.1 hr	Heart diagnostics

TABLE IV Estimated Yield Values for Radioisotopes Produced in the 86-in. Cyclotron at the ORNL

Radioisotope	Natural element target	Estimated yield (mCi/hr)	Radioisotope	Enriched stable isotope target	Estimated yield (mCi/hr)
^{72}As	Ge	65	^{205}Bi	^{206}Pb	10
^{74}As	Ge	1	^{206}Bi	^{206}Pb	5
^{76}As	Ge	10	^{57}Co	^{59}Ni	35
^{195}Au	Pt	8	^{149}Eu	^{149}Sm	1
^{133m}Ba	$CsCl_2$	50	^{150}Eu	^{150}Eu	1
^{7}Be	Li	30	^{67}Ga	^{68}Zn	1000
^{207}Bi	Pb	0.3	^{151}Gd	$^{151}Eu_2O_3$	1
^{109}Cd	Ag	8	^{123}I	^{123}Te	200
^{139}Ce	La_2O_3	2	^{111}In	^{111}Cd	100
^{56}Co	Fe	15	^{172}Lu	^{173}Yb	1
^{51}Cr	V	120	^{174}Lu	^{174}Yb	1
^{55}Fe	Mn	8	^{52}Mn	^{52}Cr	3
^{68}Ge	Ga	5	^{140}Nd	^{141}Pr	16
^{22}Na	Mg	0.3	^{143}Pm	$^{144}Nd_2O_3$	0.1
^{185}Os	Re	0.2	^{143}Pm	$^{144}Sm_2O_3$	0.2
^{103}Pd	Rh	10	^{83}Rb	$^{84}SrCO_3$	0.1
^{75}Se	As	8	^{99}Rh	^{99}Ru	2
^{85}Sr	Rb	3	^{48}Sc	^{48}CaO	20
^{95m}Tc	Mo	2	^{179}Ta	$^{180}HfO_2$	1
^{44}Ti	Sc	2	^{167}Tm	$^{168}EuO_3$	5
^{48}V	TiO_2	23	^{86}Y	$^{86}SrCO_3$	100
^{181}W	Ta	8	^{87}Y	$^{87}SrCO_3$	50
^{88}Y	$SrCO_3$	3			
^{65}Zn	Cu	25			
^{89}Zr	Y	225			

the target into a basic or acidic solution; and (3) one or more separations steps using ion exchange, solvent extraction, or precipitation–filtration processes. Following isolation and purification of the radioisotope product, it must be converted to the physical form necessary for its application. Examples include a dissolved salt solution, a solid oxide or metal power, a pressed pellet, a thin film, an extruded wire, and an electroplated disk or sphere. More novel forms may be required for research or other specialized applications.

Several specific isotope production processes are described in Section IV to illustrate the steps necessary to produce and recover isotopes for particular applications.

IV. EXAMPLES OF SPECIFIC ISOTOPE PRODUCTION PROCESSES

A. Cobalt-60

Cobalt-60 (half-life = 5.27 years) is the largest revenue-producing commercial radioisotope in the world. Most of its current use is in the sterilization industry, primarily for medical products intended for human consumption. (See Table VIII for a list of items that are sterilized.)

Increased use for food irradiation is likely in the future. The 1995 text *Food Irradiation*, *a Sourcebook* (E. A. Murano, ed.) states that "irradiation processing of foods has been approved in over 38 countries." While numerous food irradiation plants have been put in operation throughout the world and the number of plants is expected to increase rapidly, only one dedicated irradiation plant for food is located in the United States. However, with recent demands for control of pathogenic microorganisms in meat, especially ground beef and poultry, the need for additional plants in the United States may develop rapidly.

The radiation source, ^{60}Co, in the form of cylindrical metal rods ("pencil" shaped), is encapsulated within sealed capsules. A number of capsules sufficient to provide the desired radiation source levels are placed in shielded containers for transportation to and from storage at shielded irradiation facilities. At the facility sites, the packaged products to be sterilized are placed on pallets and remotely conveyed inside the shielded radiation

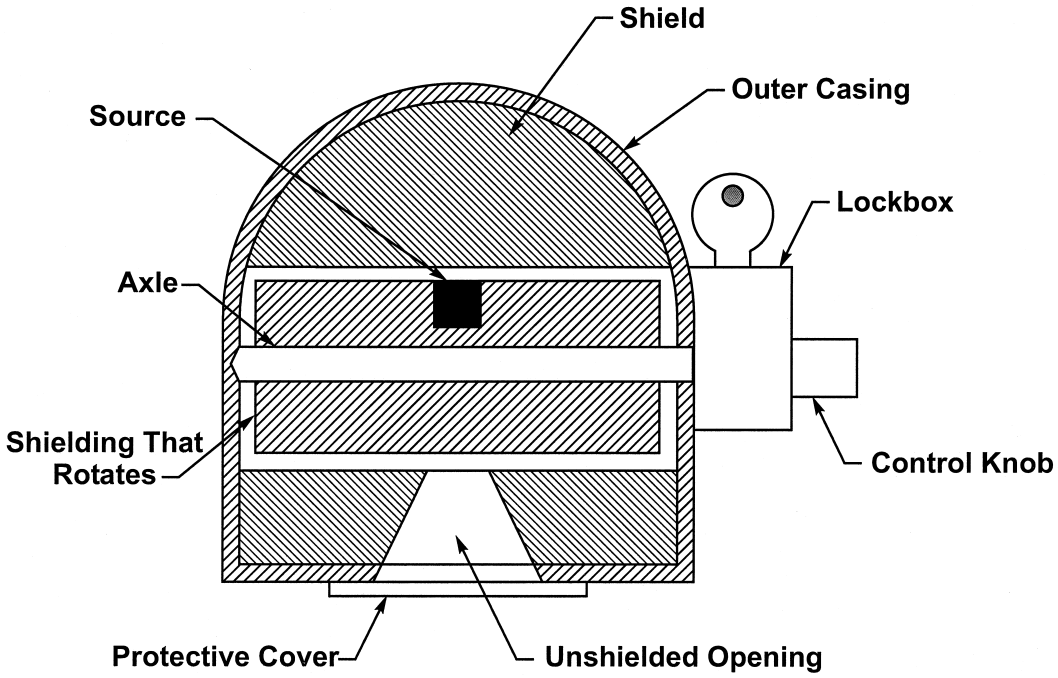

FIGURE 3 Typical ^{192}Ir radiography camera.

facility. The radiation source shield is then removed for the period of time necessary to irradiate and sterilize the packaged products. Finally, the pallet holding the sterilized packaged products is remotely conveyed out of the irradiation facility.

Cobalt-60 irradiators are produced and sold predominantly by MDS Nordion, headquartered in Kanata, Ontario, Canada. The ^{60}Co is produced in CANDU reactors, which are designed to use control rods made from ^{59}Co. Thus, the dual use of reactor control and radioisotope production enables the ^{60}Co production cost to be minimized. MDS Nordion purchases the control rods from Atomic Energy Limited of Canada, recovers the ^{60}Co, and fabricates ^{60}Co irradiation sources for sale.

B. Iridium-192

Iridium metal is one of the most chemically inert materials in existence. Therefore, natural iridium metal, with its natural abundance of 37% ^{191}Ir, is the target material for production of ^{192}Ir by the n,γ reaction in a nuclear reactor. The geometric shape selected for the iridium target pieces is dependent on its eventual use. The predominant use is for γ-radiographic, nondestructive examinations of welded joints in heavy steel structures such as bridges, ships, and pipelines. For this use, the iridium metal is cut into thin disks, nominally about 2.7 mm in diameter and about 0.3 mm thick. The disks are encapsulated in aluminum tubes during irradiation. Immediately after irradiation, the targets are moved into a shielded hot cell, where the target is cut open and the irradiated disks (^{192}Ir γ product) are cleaned, weighed, and shipped to commercial fabricators of portable, shielded γ cameras. A typical γ camera is illustrated in Fig. 3. These devices are transported to construction sites and used to make γ-ray images of the welded joints.

Smaller amounts of ^{192}Ir, in the shape of tiny wires and spherical particles, are used for brachytherapy radiation treatment of cancers. Such γ sources are also being tested for a variety of other medical applications.

C. Molybdenum-99, Iodine-131, and Xenon-133

These isotopes are produced as fission products by irradiation of highly enriched ^{235}U (HEU) in a variety of nuclear reactors typically operating at a neutron flux of about 10^{14} neutrons $\cdot$ cm^{-2} $\cdot$ sec^{-1} or higher and a power level of 5 to 10 MW. The HEU targets are typically closed stainless-steel cylinders, with about 25 g of HEU electroplated to the inside of the cylinder walls of each target. The irradiation time is usually about 1 week. Targets are discharged from the reactor several times each week so that a steady supply of the ^{99}Mo (66-hr half-life) can be recovered and utilized before excessive decay occurs.

The irradiated targets are processed immediately upon discharge from the reactor. The residual HEU and fission

products are dissolved in sulfuric acid, and the ^{131}I and ^{133}Xe products are removed in the gas phase. The ^{131}I is collected on a solid sorbent, such as copper wool, and the ^{133}Xe is collected in a cold trap. The acidic HEU–fission product solution is processed by ion-exchange and selective precipitation processes to recover and purify the ^{99}Mo product, which is then converted to an alkaline sodium molybdate solution. This solution is transported quickly (usually by dedicated air transport) to various fabricators of ^{99}Mo/^{99m}Tc generators.

At the generator fabrication facilities, the ^{99}Mo is adsorbed onto small (1- to 2-ml) beds of alumina (Al_2O_3), each contained in a glass cylinder with inlet and outlet ports. Each loaded alumina bed is placed inside a container that is shielded with lead or depleted uranium and then shipped to various radiopharmaceutical and nuclear medical laboratories. Periodically (usually daily), the generator is eluted or "milked" to remove the in-grown ^{99m}Tc daughter of ^{99}Mo. The milking operation is accomplished by passing a saline solution through the generator and collecting the ^{99m}Tc product as sodium pertechnetate solution. Aliquots of the solution are used to prepare a variety of specific diagnostic agents formulated for imaging examinations of organs such as the heart, brain, lungs, bones, kidney, and liver.

Technetium-99m, with its 6.0-hr half-life and 0.14-MeV decay γ emission, is ideal for imaging of most of the organs in the human body. The use of these diagnostic procedures has increased steadily, and ^{99m}Tc is now used in more than 10 million procedures each year.

At the same time, the fission production process and the continuous demands for production of ^{99}Mo have been recognized as having significant vulnerabilities. First, the irradiation target is weapons-grade HEU, and the nonproliferation concerns are exerting great political pressures to change to low-enriched uranium ($\leq$20% ^{235}U). In this case, the reactor capacities will be decreased by almost a factor of 5 and higher levels of activation product impurities (predominantly ^{239}Pu) will be created.

The second vulnerability is the amount of highly radioactive fission product wastes. The fission yield of ^{99}Mo is only ~6%; thus, the fission product wastes are more than 15 times greater than the product yield. Recovery, packaging, and disposal of these wastes are expensive and difficult. Also, the radiation exposure of workers can be significant.

The third vulnerability is the presence of fissile ^{235}U throughout the process, since only a portion of the ^{235}U is destroyed during the irradiation. The potential for accumulation of fissile masses is a danger due to difficult accountability measurements and incomplete disposal methods.

D. Californium-252 and Transuranium Isotopes for Research

The predominant supply of these isotopes is the U.S. Department of Energy (DOE) Heavy Element Production Program, located at the ORNL. This program utilizes the High Flux Isotope Reactor (HFIR) and the Radiochemical Engineering Development Center (REDC). The production sequence is shown in Fig. 4.

Aluminum-clad targets containing a mixture of curium isotopes, predominantly ^{246}Cm, ^{244}Cm, and ^{248}Cm, are remotely fabricated in the REDC hot cells. The curium target material (8–10 g per target), in the oxide form, is mixed with aluminum metal powder. The cermet is pressed into pellets, which are then encapsulated in aluminum target rods.

During irradiation in the HFIR high-flux region (2×10^{15} neutrons $\cdot$ cm$^{-2} \cdot$ sec^{-1}) at 85 MW, the curium isotopes undergo a series of n,γ reactions and β decays (shown in Fig. 5) to produce a mixture of transcurium isotopes. Production campaigns (target fabrication, irradiation, and radiochemical separations processing) are

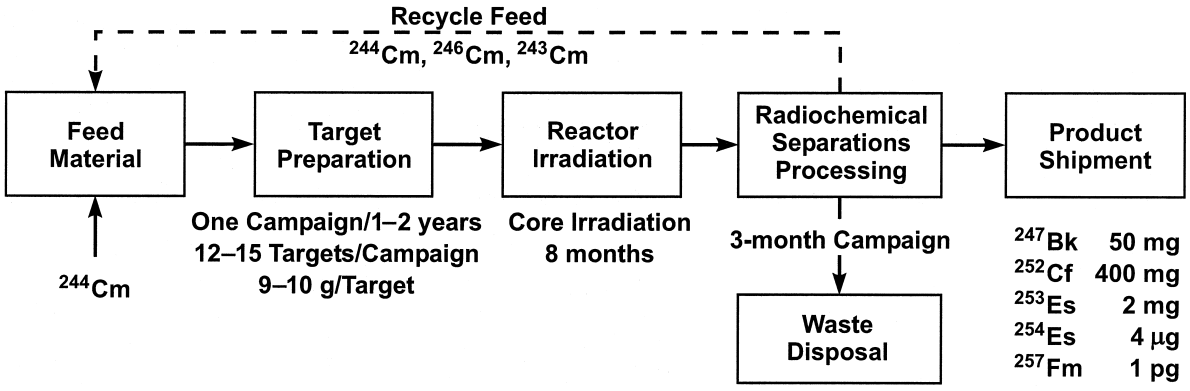

FIGURE 4 Transuranium radioisotope production for DOE research programs and ^{252}Cf neutron sources.

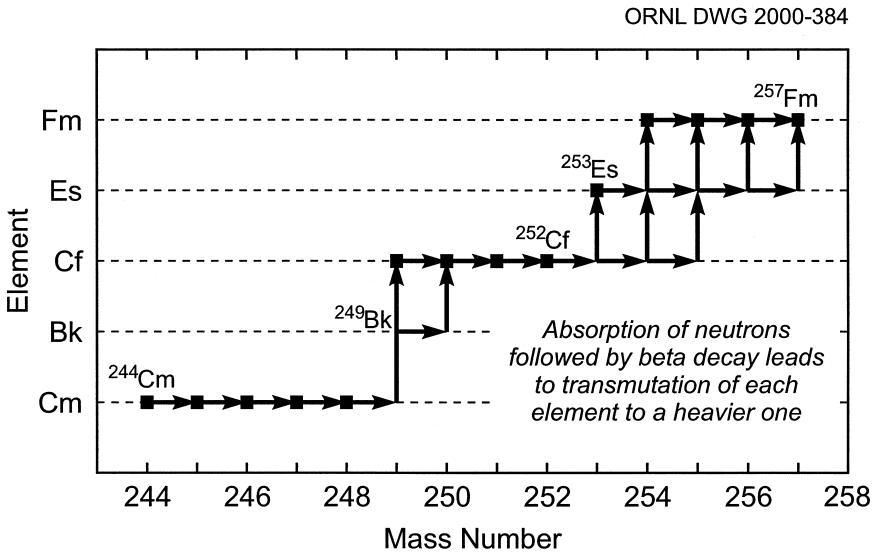

FIGURE 5 Path of the element transmutation in the High Flux Isotope Reactor. [Based on a figure in ORNL Review, Vol. 18, No. 3, 1985, p. 55.]

currently performed for a group of 10 to 15 targets at intervals of about 18 months. Each group of targets is irradiated for about 160 days. After discharge from the reactor, the targets are stored for about 3 weeks to allow short-lived fission products to decay. The postirradiation radiochemical processing begins as soon as practicable and is completed as rapidly as possible to allow maximum recovery of the short-lived (20.5-day half-life) ^{253}Es product.

The sequence of radiochemical processing steps shown in Fig. 6 is used (1) to dissolve the targets; (2) to remove nonlanthanide fission products, activation products, and other miscellaneous impurities; (3) to remove lanthanide fission products from the actinide elements; (4) to separate each of the actinide products and the residual curium target material; and (5) to purify the curium and convert it to a solid oxide form for new HFIR targets. This sequence of processing steps can usually be completed in a period of 6–8 weeks. Each of the separated transcurium element isotope products is purified further and divided for shipment to researchers who have requested it.

The ^{249}Bk (half-life = 320 days) product is allocated to research experiments as needed. Any ^{249}Bk that is not needed for berkelium experiments or that is not destroyed during the experiments is stored. After sufficient decay, it is then processed to recover the long-lived ^{249}Cf (half-life = 351 years) for subsequent californium experiments.

The californium product initially recovered from the processing campaigns has the following typical isotopic composition.

	Atom%
^{249}Cf	0.3
^{250}Cf	10
^{251}Cf	3
^{252}Cf	86
^{253}Cf	1
^{254}Cf	0.05

This mixture, dominated by ^{252}Cf, is not very useful for nuclear chemistry and physics research because of its high level of radioactivity. From a research standpoint, the mixture is most useful as a source of high-purity ^{248}Cm, obtained by α decay of ^{252}Cf. The high-purity ^{248}Cm, containing ~97% ^{248}Cm and ~3% ^{250}Cm, is very useful for nuclear chemistry and physics experiments. Thus, the californium products are usually purified to remove residual curium target material and then stored for several years to await ingrowth of ^{248}Cm.

Another important property of ^{252}Cf enables many practical applications. Because 3% of the decay of ^{252}Cf occurs by spontaneous fission, it can be made into portable neutron sources. These sources have a wide variety of applications in cancer therapy, neutron activation analysis (NAA), neutron radiography, reactor startup sources, and nuclear science education, as described in the following section. Currently, about 90% of the ^{252}Cf produced is used by government-sponsored programs in neutron source applications. Following this use, the aged sources are returned to the ORNL, thus permitting recovery of the ingrown ^{248}Cm product for subsequent research applications.

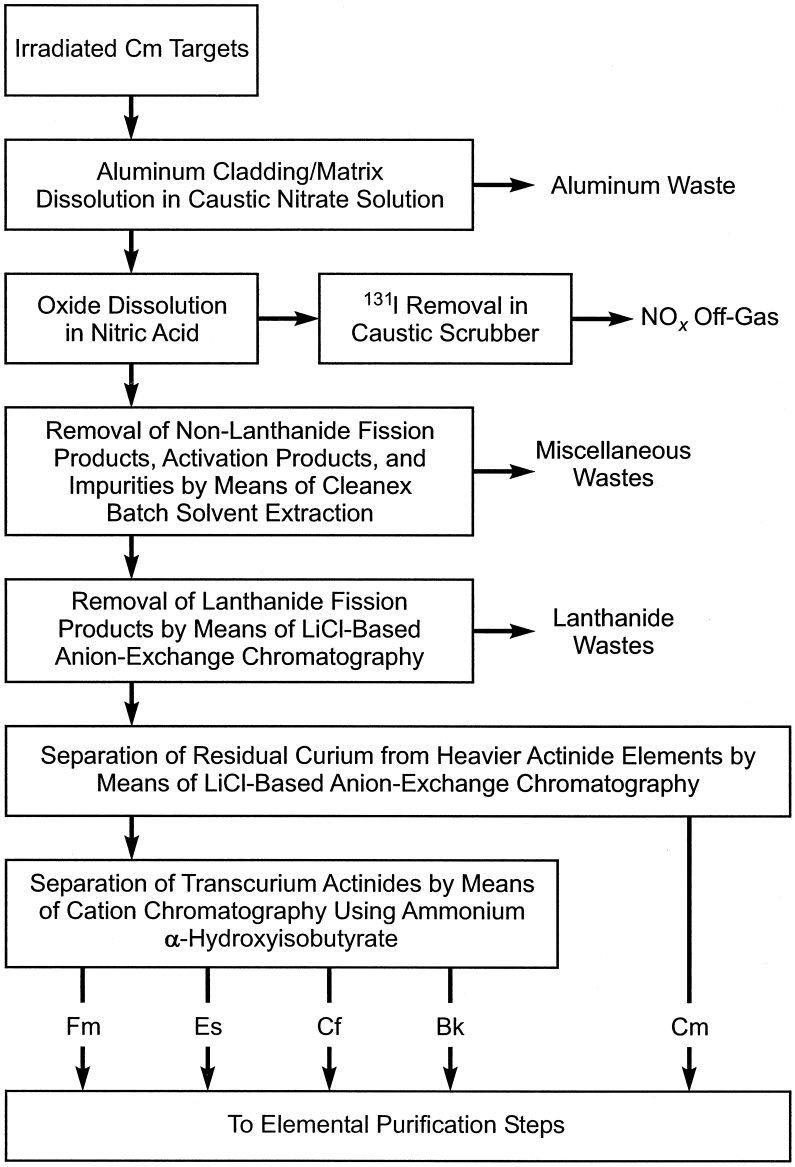

FIGURE 6 Radiochemical processing steps used to recover curium, berkelium, californium, einsteinium, and fermium isotopes.

E. Plutonium–238

The α-emitting radioisotope, ^{238}Pu, has an 87-year half-life and a specific activity of 0.57 W/g. Because of its relativity long half-life and its significant decay heat, ^{238}Pu is used in radioisotope thermoelectric generators (RTGs) to provide a power source for uses in space vehicles and remotely located instrumentation. The Apollo, Gemini, and Cassini space missions all contained ^{238}Pu RTGs. Interestingly, ^{238}Pu is also used as the power source for human heart "pacemakers."

The ^{238}Pu can be produced by neutron irradiation of either $^{237}NpO_2$ or $^{241}AmO_2$ targets, usually in an aluminum cermet form. Because the neutron capture rate of ^{238}Pu is about three times greater than ^{237}Np, the irradiation of ^{237}Np to produce ^{238}Pu is limited to relatively short exposures to minimize production of heavier plutonium isotopes. Typically, 12 to 20% of the ^{237}Np is converted to ^{238}Pu by neutron capture and beta decay. The irradiated targets are stored for about 6 months to allow the short-lived fission product radioisotopes to decay prior to beginning the postirradiation radiochemical separations processing.

After dissolution of the ^{238}Pu, fission products, and residual ^{237}Np, the elements are separated by a series

of nitrate-based anion-exchange operations or a combination of solvent extraction and ion exchange processes. The isolated ^{238}Pu is purified and then converted to $^{238}PuO_2$ by means of the oxalate precipitation/filtration/calcination process. The $^{238}PuO_2$ powder is then pressed into a pellet form of a size that is suitable for the end use. The pellets are encapsulated in iridium metal capsules which are placed into graphite modules for use in the RTGs.

V. INDUSTRIAL APPLICATIONS OF ISOTOPE-RELATED NEUTRON SCIENCE

A. Background

The large majority of industrial applications related to neutron science are based on utilization of radioisotopes produced in nuclear reactors. Such radioisotopes are referred to as *by-product materials*, which are defined as ". . . any radioactive material (except special nuclear material) yielded in or made radioactive by exposure to the radiation incident to the process of producing or utilizing special nuclear material." The term *special nuclear material* means ^{233}U, ^{235}U, and all isotopes of plutonium. Thus, by-product material includes fission products and neutron-generated heavy isotopes as well as radioisotopes produced by irradiation of target materials.

Industrial applications of radioisotopes have a substantial impact on the U.S. and the world economies. Almost every industrial activity makes use of radioisotopes in some way. Excluding electric power generation and national defense applications, approximately 4%, or about $250 billion dollars per year, of the U.S. gross domestic product can be directly attributed to radioisotope use, and secondary effects of such use are several times that value. Types of radioisotopes, quantities used, and applications vary widely. Applications range from large production facilities using millions of curies to consumer products containing microcuries. Table V shows some of the by-product radioisotopes that are routinely used, along with their respective applications.

TABLE V By-product Radioisotopes Used in Industrial Applications

Americium-241	Smoke detectors, assays, oil-well logging
Californium-252	Neutron assays (hydrogenous materials), cancer therapy
Cesium-137	Cancer therapy, gaging, radiation processing
Cobalt-60[a]	Radiation processing, cancer therapy, radiography
Iodine-131	Diagnosis and therapy
Iridium-192	Radiography, cancer therapy
Krypton-85	Gaging, flow measurement
Nickel-63	Assays, electronics
Strontium-90	Standards, heat sources
Tritium	Lights, flow measurement
Technetium-99[b]	Diagnosis

[a] Most widely used radioisotope in terms of number of curies used and value of isotope.

[b] Most widely used radioisotope; accounts for over 75% of radiopharmaceutical diagnostic procedures; second to cobalt-60 in isotope value.

B. Types of Applications

Ultimately, all applications of radioisotopes are based on one or more of three characteristics of the radiations emitted: (1) they can affect other materials, (2) they can be affected by other materials, and (3) they can be detected by nonintrusive means. These characteristics lead to a general classification of applications into three very broad groups, as described in the following paragraphs.

a. *Radiation* applications are those in which the radiation is used to bring about physical or chemical changes in the material(s) being irradiated. Examples include radiation-induced chemical synthesis, sterilization, and cancer therapy.
b. *Gauging* with radioisotopes is a widespread and varied field in which most applications depend on the effect of other materials on radiation. Density, thickness, level, flow, and several other types of gauges are in routine use in thousands of industrial facilities for process control, quality assurance, troubleshooting, and many other purposes. In terms of diversity of applications, the number of different isotopes employed, and the number of users, gauging is the most widespread industrial use of isotopes.
c. *Tracers* are used to follow changes in dynamic systems to determine how such systems are operating. Mechanical, biological, environmental, chemical, and all other systems are subject to application of tracer techniques, which are based on the ability to detect the emitted radiation.

Within these three broad categories, tremendous variation exists in specific applications. The following section presents examples of applications in selected industries. This is by no means a complete list, in terms of either applications or the number of industries served. The section is presented only to illustrate the scope of the industrial use of radioisotopic techniques.

C. Selected Industrial Applications

1. Petroleum and Natural Gas

The petroleum industry was among the first to use radioisotope techniques. Such uses span the entire range

TABLE VI Selected Applications of By-product Radioisotopes in the Petroleum Industry

Resource characterization
Logging of oil wells to determine oil location
Analysis of other constituents in well (water, salt, etc.)
Lithology of well bore and surrounding strata
Flow measurement during extraction
Transport
Inspection of pipelines (weld quality, etc.)
Flow control
Discrimination of zone boundaries between different crudes
Refining
Process control (levels, density, etc.)
Assay of contamination in products

from the oil/gas well to delivery of the finished product. Table VI gives a partial list of petroleum-related applications.

2. Chemicals, Plastics, and Rubber

The chemical manufacturing industry uses radioisotopes both to produce materials by radiation and to control production. A few representative applications are shown in Table VII.

3. Health Care

The public is generally aware of the use of radiation for cancer therapy, and many individuals have undergone diagnostic procedures that use radioisotopes. In fact, one-third of all hospital diagnostic procedures involve radioisotopes. However, few people realize the extent to which radioisotopes are used in supporting health care technologies. For example, almost 80% of medical consumable products are sterilized by radiation. Table VIII gives a few examples of health care–related applications.

4. Textiles and Clothing

As in many other industries, manufacturers of textiles and similar materials make extensive use of radioisotopic gauges, and these industries have incorporated a significantly large amount of radiation-controlled automation. Many other techniques are used at all stages from raw materials to finished products, as indicated by the representative list in Table IX.

TABLE VII Selected Applications of By-product Radioisotopes in the Chemical Industry

Radiation processing
Polymerization, copolymerization, cross-linking
"Cold" vulcanization
Curing, grafting
Production of specialized materials (coating, etc.)
Waste treatment
Process control
Density measurement of on-line processes
Liquid-level measurement and control
Thickness gaging of products

TABLE VIII Selected Applications of By-product Radioisotopes in Health Care

Sterilization of medical consumables (surgical gowns, syringes, dressings, sutures, etc.)
Sterilization of biological materials (tissue grafts, bone implants, etc.)
Sterilization of consumer products (bandages, tape, etc.)
Cancer therapy (external and *in vivo*)
Diagnostics (more than 14 million procedures per year)
Drug testing

5. Environment, Ecology, and Natural Resources

In the broad area of utilization, conservation, and protection of natural resources, many applications of radioisotopes are found. Table X gives a short list of such uses.

6. Construction and Heavy Manufacturing

Radioisotope gauges are indispensable tools in modern construction and heavy manufacturing. They are used to control operations and to ensure quality at every step of manufacture, assembly, and installation. Radioisotope use has been adopted either because it is faster, more accurate, and less intrusive or because it is less expensive than alternate methods. In fact, radioisotope use frequently offers all of these advantages. Table XI lists just a few of the routine applications in these areas.

7. Food

The food and beverage industry makes use of radioisotopes from the agricultural stage to the final packaged product. A very limited list of such applications is given in Table XII.

TABLE IX Selected Applications of By-product Radioisotopes in the Textile Industry

Disinfestation of raw materials (wool, leather, etc.)
Process control during manufacturer
Synthetic material production
Weave density
Color control and fixation
Product measurement and treatment
Additive assays
Coating thickness
Uniformity
Color enhancement

TABLE X Selected Applications of By-product Radioisotopes in Environmental, Ecological, and Natural Resource Industries

Hydrology	Flow, quantity measurements
Forestry	Timber density, saw controls
Mining	Ore assay, waste control
Waste treatment	Sterilization of sludges, decomposition of contaminants
Insect control	Sterilization of breeding males
Pollution	Detection of origin of pollutants, tracking movement

D. Other Applications

The preceding section describes some of the larger and better known, but by no means all, of the applications of radioisotopes. Neutron radiography applications, using portable neutron sources (^{252}Cf), are described in Section V.D.2. Communications, electronics, transportation, and many other areas all have specific applications, and much overlap exists. For example, fields as varied as paper manufacturing and processing of candy in sheets use essentially the same technique for control of product thickness during processing. In many cases, processes are fully automated, with adjustments being initiated by signals from the radioisotope device.

Some applications based on nuclear science do not use radioisotopes directly but rather are conducted within nuclear reactors. The best known of these, and the largest by far, is the generation of electricity. Lesser-known ones include color enhancement in semiprecious gemstones, manufacture of specialized filters, and NAA.

Basic and applied research are not discussed here, but all industries maintain active programs directed toward product improvement, waste control, cost minimization, and other practical applications. Obviously, any industrial applications presently in use originated from such research.

E. Application of Californium-252 as a Portable Neutron Source

Californium-252 is an extremely versatile radioisotope. Because 3% of the decay of ^{252}Cf occurs by spontaneous fission, it can be made into portable neutron sources for many neutron science applications. The specific activity of ^{252}Cf is 2.3×10^9 neutrons/sec · mg.

TABLE XI Selected Applications of By-product Radioisotopes in Construction and Heavy Manufacturing

Construction
Site preparation (soil density, hydrology)
Inspection of welds, poured concrete, etc.
Flow checks, trouble diagnosis
Heavy manufacturing
Detection of defects in raw materials
Control of machining, assembly operators
Quality assurance on finished products

TABLE XII Selected Applications of By-product Radioisotopes in the Food Industry

Optimization of water and fertilizer use in agriculture
Retardation of spoilage in fresh produce, shellfish
Disinfestation of bulk grain
Sprout inhibition
Elimination of pathogens from finished products
Sterilization of packaging materials

Typically, more than 100 formal loan agreements for over 200 ^{252}Cf neutron sources are in effect with DOE institutions, other U.S. government agencies, educational and medical institutions, and private research laboratories. Each year, more than 100 technical publications result from applications of ^{252}Cf neutron sources. Californium-252 also enters the commercial market by sale of bulk material to one of four source fabricators/distributors in the United States and three that are located in foreign countries.

1. Medical Applications

One of the first areas of application was in the field of medical brachytherapy, initially for studies of relative biological effectiveness and cell-killing capability and for experimental treatments using needles and seed types of source forms. A clinical study of some 650 patients with cervical cancer using an early ^{252}Cf source design showed increased survival rates of 8 to 18% compared with standard γ-ray brachytherapy. Over 1000 patients have been treated in Japan and in the states of the Former Soviet Union. Current clinical work is being carried out at the Mayer L. Prentiss Comprehensive Cancer Center of Metropolitan Detroit. New ^{252}Cf neutron sources, each containing $\sim$30 μg of ^{252}Cf, were recently supplied for a continuation of this work. The 12 new replacement sources will shorten treatment times and broaden the range of patients for whom ^{252}Cf brachytherapy is practical. More work is in progress to improve the source designs and the methods of delivery.

2. Neutron Activation Analysis

More applications of ^{252}Cf are related to NAA than to any other field. This technique employs ^{252}Cf neutrons to impinge on a sample and render it radioactive. The γ rays given off can be used to identify and/or quantify a variety of constituents. Conventional NAA is a sensitive analytical tool that can be used for simultaneous analysis of 40 to 50 elements. Some enhancement of one element versus another can be obtained by varying the exposure time, the

decay time (before counting), or the flux spectrum of the neutrons. At zero decay time, one may observe "prompt γs," which are emitted by the capturing nucleus to shed excess energy. At finite decay times, one can observe γs produced by radioactive isotopes made by neutron capture in the target isotope. Almost all research, test, and university reactors have facilities for NAA. However, most DOE sites do not have operating reactors; therefore, groups at these locations have built NAA facilities based on portable sources of ^{252}Cf neutrons, suitable for use in a wide variety of locations. Such sites include Hanford, Savannah River, Mound Laboratories, and Oak Ridge Associated Universities. The Food and Drug Administration has also planned for a NAA system, containing $\sim$200 mg of ^{252}Cf, to measure the concentrations of sodium and other constituents of interest in various food items.

In the special case of fissile material, the ^{252}Cf may induce the emission of additional neutrons from the sample itself. This technique is employed in a variety of devices that permit assay of solids to determine their fissile material content. Most important is the fuel rod scanner. All reactor fuel made in the United States is exposed to such a device, which can measure the ^{235}U content with high precision. This is both a quality control and a safeguard measure. A number of such machines are also in use in Europe and Japan. A related but more sensitive system, called the ^{252}Cf Shuffler, can detect plutonium in solid waste packages to determine whether the waste should be classified as "transuranic." Such systems are in operation at least five DOE sites.

Some NAA units have been highly specialized for particular purposes. Several prototype units designed to detect plastic explosives in aircraft passengers' luggage have been installed for field testing in numerous airports in the United States and Europe. At this time, the Federal Aviation Administration has not mandated their routine use. Another specialized use is in oil-well logging, to gain an understanding of the composition of the various strata through which a well is drilled. Idaho National Engineering and Environmental Laboratory has developed a field unit to determine the content of unexploded shells found in a proving ground. This system has been commercialized, and 15 to 50 units have been sold for a variety of applications. One company has developed an underwater NAA system that was used to seek out manganese modules on the seafloor. By far the most significant application has been prompt-γ NAA (PGNAA), which has been developed into commercial units for on-line analysis of coal and cement that are passing the analyzer on a conveyor belt at rates up to 1000 tons/hr. In coal, the analyzer can detect carbon, hydrogen, sulfur, and ash simultaneously. These units are used for sorting, blending, and power-plant feed monitoring, the latter providing information for more efficient operation of the plant, including emissions-control equipment. There are over 100 such coal analyzers in use worldwide and another 16 related devices in use in the cement industry. Devices like these each use 25 to 50 μg of ^{252}Cf. The Canadian Defense Research Establishment is developing a related system for the location of land mines. It may use 100 μg of ^{252}Cf per detector.

3. Neutron Radiography

Neutron radiography is a technique that uses a collimated beam of neutrons to generate an image of an object placed in the beam. The image can be generated on photographic film or on the newer electronic devices that provide computer-readable data. Unlike X rays, the neutrons pass readily through heavy elements like lead but are either absorbed or scattered (and hence pass out of the beam) by light elements like hydrogen. McClelland Air Force Base, near Sacramento, California, successfully used this technique for several years and applied neutrons from approximately 100 mg of ^{252}Cf to the radiography of whole airplane wings or engine nacelles to detect corrosion, fuel spills, or debonding. Previously, the Mound Laboratory applied the technique to 100% nondestructive examination to confirm the explosive fill in munitions. Currently, the Pantex Plant in Amarillo, Texas, uses a ^{252}Cf-driven neutron radiography facility, containing about 150 mg of ^{252}Cf, to examine nuclear warheads prior to their disassembly to determine whether their internal explosive components are still intact.

4. Reactor Startup Sources

Reactor startup sources, typically 0.5 to 3 mg, are used in most pressurized water reactors to increase the signal to the reactor control system, ensuring reliable control during the startup phase. The properties of ^{252}Cf are ideally suited for this application, but the pace of reactor construction has slowed down. As a result, few sources are now being made for reactor startup.

5. Educational Applications

By far the largest number of loaned ^{252}Cf sources has been supplied to educational institutions that make use of ^{252}Cf in their health physics or nuclear engineering courses. For example, ^{252}Cf is used as a neutron generator in the health physics program at Francis Marion University, which has one of the larger such programs in the nation. Students in courses on nuclear physics, nuclear radiation physics, and health physics use a ^{252}Cf-loaded device to learn NAA, to study thermal-neutron/fast-neutron flux ratios, and to make neutron flux determinations and mappings.

6. Miscellaneous Applications

There are a significant number of applications that do not require large quantities of ^{252}Cf but for which no other

material can perform the job. For example, the National Institute of Science and Technology has characterized the neutron field emitted by ^{252}Cf sufficiently well that it has become the standard for calibrating neutron-detecting instruments—both scientific instruments and health physics dosimeters. It is especially important for calibrating neutron multiplicity detectors. Also, fission fragments from a very thin ^{252}Cf source have been used to produce and study a number of very short-lived fission products, to simulate cosmic-ray damage to high-altitude electronics, and to serve as ionization sources in plasma desorption–mass spectrometry systems, of which it is estimated that nearly 200 are in use worldwide. An unusual application of both fission fragments and neutrons is a near-criticality detector developed at the ORNL. This device is a fission chamber that emits an electronic signal when a fission fragment is detected. By locating a neutron detector nearby and using signal correlation techniques, it is possible to deduce the neutron multiplication factor (k) in the intervening medium.

7. Californium User Facility

In 1996, DOE designated a portion of the REDC at the ORNL as a Californium User Facility. This facility makes it easy to set up and test experiments using ^{252}Cf neutrons to determine whether more elaborate experiments are worthwhile. Experiments that have been performed at the Californium User Facility have involved studying radiation effects on high-energy physics detectors and experiments on boron neutron capture therapy with living cells.

F. Summary

Industrial uses of nuclear science are so widespread that they affect everyone in both direct and indirect ways. The food we eat, the clothes we wear, the automobile we drive, the newspaper we read (and the light we read it by), and many other everyday items have been influenced by developments stemming from isotope products.

SEE ALSO THE FOLLOWING ARTICLES

ACCELERATOR PHYSICS AND ENGINEERING • NUCLEAR CHEMISTRY • NUCLEAR PHYSICS • NUCLEAR REACTOR THEORY • RADIATION PHYSICS • RADIATION SOURCES • RADIOACTIVITY

BIBLIOGRAPHY

Benedict, M., Pigford, T. H., and Levi, H. W. (1981). "Nuclear Chemical Engineering," 2nd ed., McGraw–Hill, New York.

Benker, D. E., Chattin, F. R., Collins, E. D., Knauer, J. B., Orr, P. B., Ross, R. G., and Wiggins, J. T. (1981). "Chromatographic Cation Exchange Separation of Decigram Quantities of Californium and Other Transplutonium Elements," ACS Symposium Series 161, pp. 161–171, American Chemical Society, Washington, DC.

Bertel, E. (1999). Production of radioisotopes for beneficial uses. *In* "Proceedings of the International Conference on Future Nuclear Systems, Global '99—Nuclear Technology—Bridging the Millennia," American Nuclear Society Fuel Cycle and Waste Management, Jackson Hole, WY, Sept.

Bigelow, J. E., Collins, E. D., and King, L. J. (1979). "Actinides Separations," ACS Symposium Series 117, pp. 147–155, American Chemical Society, Washington, DC.

Bigelow, J. E., Corbett, B. L., King, L. J., McGuire, S. C., and Sims, T. M. (1981). "Production of Transuranium Elements in the High Flux Isotope Reactor," ACS Symposium Series 161, pp. 3–18, American Chemical Society, Washington, DC.

Chattin, F. R., Benker, D. E., Loyd, M. H., Orr, P. B., Ross, R. G., and Wiggins, J. T. (1981). "Preparation of Curium-Americium Oxide Microspheres by Resin-Bead Loading," ACS Symposium Series 161, pp. 174–185, American Chemical Society, Washington, DC.

Collins, E. D., Benker, D. E., Chattin, F. R., and Ross, R. G. (1981). "Multigram Group Separation of Actinide and Lanthanide Elements by LiCl-Based Anion Exchange," ACS Symposium Series 161, pp. 147–160, American Chemical Society, Washington, DC.

King, L. J., Bigelow, J. E., and Collins, E. D. (1981). "Experience in the Separation and Purification of Transplutonium Elements in the Transuranium Processing Plant at Oak Ridge National Laboratory," ACS Symposium Series 161, pp. 133–145, American Chemical Society, Washington, DC.

Knapp, F. F., Jr., and Mirzadeh, S. (1994). The continuing important role of radionuclide generator systems for nuclear medicine. *Eur. J. Nucl. Med.* **20**(12), 1151–1165.

Management Information Services, Inc. (1994). "The Untold Story—Economic and Employment Benefits of the Use of Radioactive Material," Management Information Services, Washington, DC.

Mirzadeh, S., Schenter, R. E., Callahan, A. P., and Knapp, F. F., Jr. (1992). "Production Capabilities in U.S. Nuclear Reactors for Medical Radioisotopes," ORNL/TM-12010, Nov.

Murano, E. A. (ed.), Hayes, D. J., Murano, P. S., Olson, D. G., and Sapp, S. G. (1975). "Food Irradiation, a Sourcebook," Iowa State University Press, Ames.

National Research Council (1982). "Separated Isotopes: Vital Tools for Science and Medicine," National Research Council, Office of Chemistry and Chemical Technology, Washington, DC.

Osborne-Lee, I. W., and Alexander, C. W. (1995). "Californium-252: A Remarkable Versatile Radioisotope," ORNL/TM-12706, Oak Ridge National Laboratory, Oak Ridge, TN, Oct.

Parrington, J. R., Knox, H. D., Breneman, S. L., Baum, E. M., and Feiner, F. (1996). "Nuclides and Isotopes," 15th ed., rev., General Electric Co. and KAPL, Inc., San Jose, CA.

Tuli, J. K. (1985). "Nuclear Wallet Cards," National Nuclear Data Center, Brookhaven National Laboratory, Upton, NY, Jan.

Nuclear Energy, Risk Analysis

George F. Flanagan
Mark A. Linn
*Oak Ridge National Laboratory**

I. Background
II. Methodology of Probabilistic Risk Analysis
III. Sensitivity and Uncertainty Analysis
IV. Operational Experience Analysis
V. Insights from Probabilistic Risk Analysis
VI. Comparison of Nuclear Risks with Other Risks
VII. Conclusion

GLOSSARY

Boiling-water reactor Nuclear reactor in which water is used as a coolant but is operated at a lower pressure, which allows water to boil inside the reactor core. The resulting steam is used directly to turn turbines, thereby producing electricity.

Cladding Thin, hollow metal cylinder surrounding a fuel pellet; usually made of zirconium alloy or stainless steel. The cladding helps contain the fission products and protects the fuel from reacting with the cooling water.

Common-cause event Event that affects many components in a system, or similar components in many systems, in such a way as to negate the effects of a redundancy or independence in a design.

Containment Large building-like structure that houses the reactor vessel. It contains fission products in case of an accident and protects the reactor vessel and core from damage due to events external to the structure (missiles, tornadoes, floods, etc.). Generally made of steel or concrete. The majority of containments in use today are classified as follows: (1) pressurized-water reactor—large dry and ice condenser; (2) boiling-water reactor—Mark I, Mark II, and Mark III (Figs. 1–5).

Core Area in a nuclear power plant containing fuel in which heat is generated by fission.

Decay heat Heat that results from the radioactive decay of fission products.

Fission Splitting of a nucleus, resulting in the release of energy.

Fission products New materials formed after a nucleus fissions. The sum of the atomic mass units of these materials is less than that of the original nucleus, the remaining mass being converted to energy.

Isotopes Atoms containing the same number of protons and electrons but having a different number of neutrons. Isotopes of the same element have the same chemical behavior but different nuclear behavior. Radioactive isotopes are sometimes called radionuclides.

*Operated by UT-Battelle, LLC, for the U.S. Department of Energy under Contract DE-AC05-00OR22725.

Loss of coolant accident Accident in which the quantity or flow rate of the coolant is insufficient to provide adequate cooling of the reactor fuel, resulting in fuel heat up.

Person rems Number of rems received (dose) multiplied by the number of people receiving that dose.

Pressurized-water reactor Nuclear reactor in which water is used as a coolant and high pressure is used to prevent the water from boiling. The superheated water transfers its energy to a secondary system, where steam is produced to turn turbines that generate electricity.

Reactor vessel Large structure containing the reactor core; usually made of steel or prestressed concrete.

Rem Roentgens equivalent man; ergs of energy absorbed per gram of human tissue due to slowing down of nuclear radiation; a measure of radiation dose or damage.

Risk Product of frequency of an event and the event consequences.

Scram Process of shutting off the chain reaction process in a nuclear power plant, usually by inserting a neutron absorber (control rod) into the core.

THE RISKS associated with nuclear energy have been a topic of discussion from the inception of the use of nuclear energy for electricity production. This article traces the history of using probabilistic risk assessment for assessing nuclear power risk. It contains a rather detailed discussion of the predominately used methods and the results of risk analysis work completed through the 1990s. It also includes a discussion of the implications and use of risk analysis in regulatory and industry decision making. Finally, in order to put the risk of nuclear power in perspective, nuclear risk is compared with other risks.

I. BACKGROUND

A. Reactor Safety Study

In the summer of 1972, the U.S. Atomic Energy Commission undertook a study to evaluate the public risks associated with commercial nuclear power plants that were being introduced into the U.S. electric utility industry. Earlier studies had provided conservative and unrealistic estimates of deaths and property damage that would result from an accident at a nuclear facility. These early estimates were based on deterministic analysis of the health effects of a hypothetical release of fission products from a nuclear reactor. The goals of the Reactor Safety Study (RSS) were to identify the realistic accident sequences that could release radioactivity (paying particular attention to nuclear plant design), to estimate the probability of each accident sequence occurrence, and, finally, to determine the health effects of any release. Dr. Norman C. Rasmussen of the Massachusetts Institute of Technology was chosen to direct the study. The risks had to be estimated instead of measured because only 50 commercial nuclear plants were in existence at the time, and no nuclear accidents resulting in a significant release of radioactivity had occurred.

The RSS risk assessment methodology was developed based on one used by the Department of Defense and the National Aeronautics and Space Administration to examine reliability issues. The RSS method, called probabilistic risk assessment (PRA), consisted of coupling event trees that described the possible accident scenarios with fault trees that described the system performance. Two power plants were chosen for the analysis: Surry-1, a Westinghouse designed pressurized-water reactor (PWR) with a large, subatmospheric containment; and Peach Bottom-2, a General Electric-designed boiling-water reactor (BWR) with a Mark I containment. In addition to the attention paid to detail in evaluation of the plant design, an attempt was made to model more realistically the behavior of the core and of the resulting radioactive materials following a core melt. Particular attention was paid to the chemical behavior of the fission products, their transport inside the containment, the failure mode of the containment, and the transport of airborne radioactivity to the public (including effects of weather).

In the RSS, the consequences of a postulated reactor accident were categorized as (1) early fatalities, (2) injuries, (3) latent fatalities per year (up to 30 years after the accident), (4) genetic effects, and (5) off-site property damage (not including damage to the plant or cost of replacement power). For a PWR similar to the Surry-I plant, the frequency of core melt was estimated to be 6×10^{-5} per reactor year (RY), and for a BWR similar to Peach Bottom-2, the core melt frequency was estimated to be 3.0×10^{-5}/RY.

Generally, the results of the RSS revealed that loss of coolant accidents (LOCAs) (especially from small breaks) made up the primary contribution to PWR risks and that transients were the principal contributors to BWR risks.

B. Risk Assessment Review Group

The publication of the RSS in 1975, commonly referred to by its report number (WASH-1400), generated considerable discussion. The concerns centered around the completeness of the study, the equipment failure database used, the methodologies used, statistical issues, the assessment of damage to human health, common-cause failures, effect of external events, human error, and quality control. Eventually, a formal review of the study was funded by the U.S. Nuclear Regulatory Commission (NRC). Headed by Professor H. Lewis of the University of

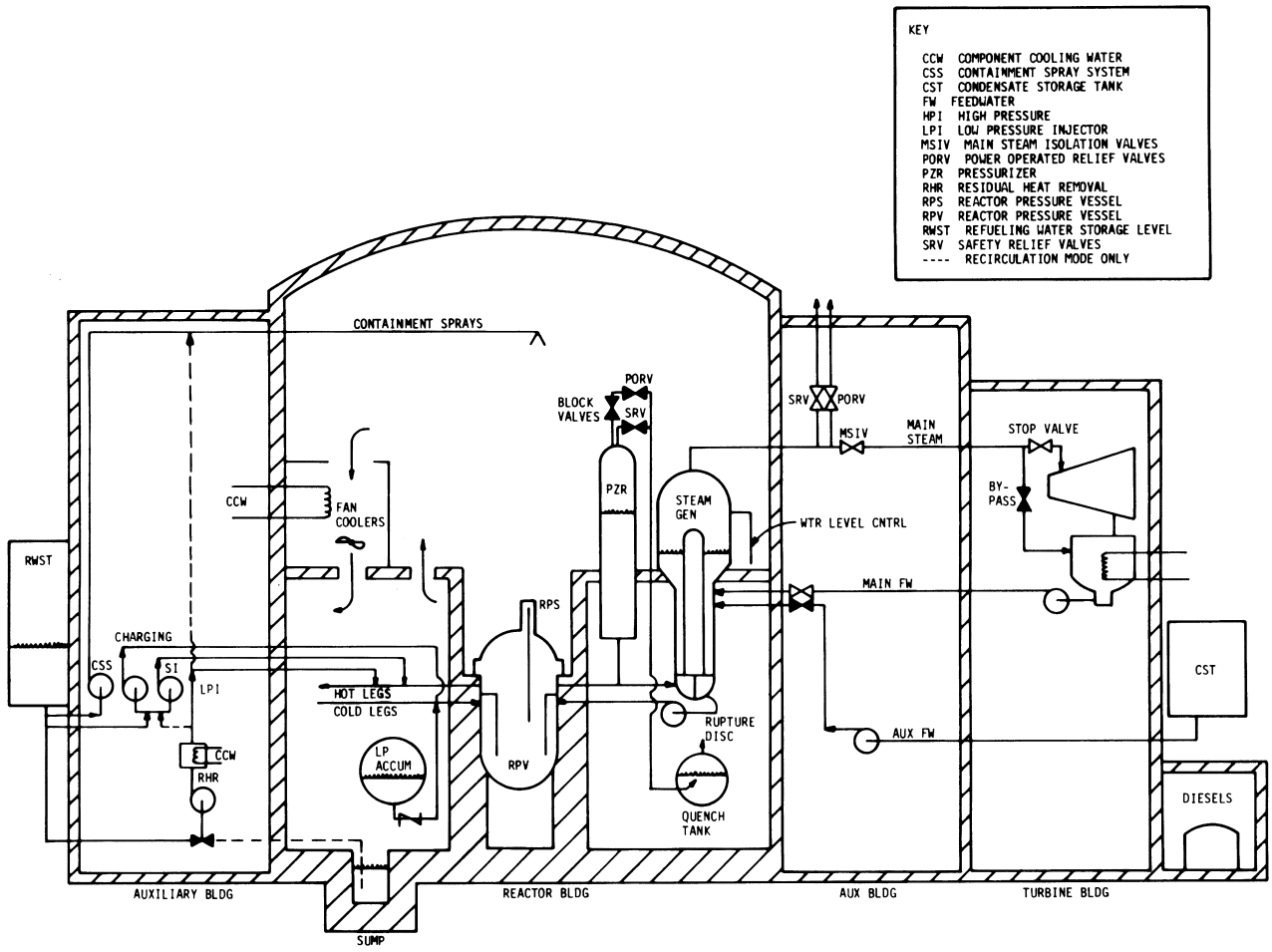

FIGURE 1 Large, dry containment for a pressurized-water reactor.

California–Santa Barbara, the review group published its results in 1978.

The review group found that the initial study had made both conservative and non-conservative assumptions. Its weaknesses included the inability to adequately quantify human error; an inadequate treatment of common-cause failures, including external events such as earthquakes, fires, and floods; inconsistent propagation of uncertainties throughout the calculations; an inadequate database; and poor statistical treatment that resulted in a non-conservative estimate of uncertainty. Also, estimates of the sources and transport of radioactive materials from the melted core needed improvement. Finally, the RSS Executive Summary did not reflect the contents of the report.

The strengths of the RSS included the soundness of the methodology used, that is, the PRA method. The review group recommended its continued use even though upper and lower uncertainty bounds may be all that are useful about a given problem. The review group further stated that, even with its weaknesses, an analysis such as that performed in the RSS was an improvement over earlier studies and that a wide range of regulatory and licensing processes could be made more rational by the proper use of this methodology.

However, after publication of the report (referred to as the Lewis Committee Report), attention became heavily focused on the negative aspects of the RSS and further application of the PRA methodology was not actively pursued.

C. PRA Implications of the Three Mile Island 2 Accident

For six months after the publication of the Lewis Committee Report, the status and use of PRA were reviewed by both the NRC and by the nuclear industry with only mild interest. Then, on March 28, 1979, at Three Mile Island 2 (TMI-2), a trip of the condensate pumps resulted in a loss of feedwater to the steam generators, followed by a stuck-open pilot-operated relief valve in the primary system. The

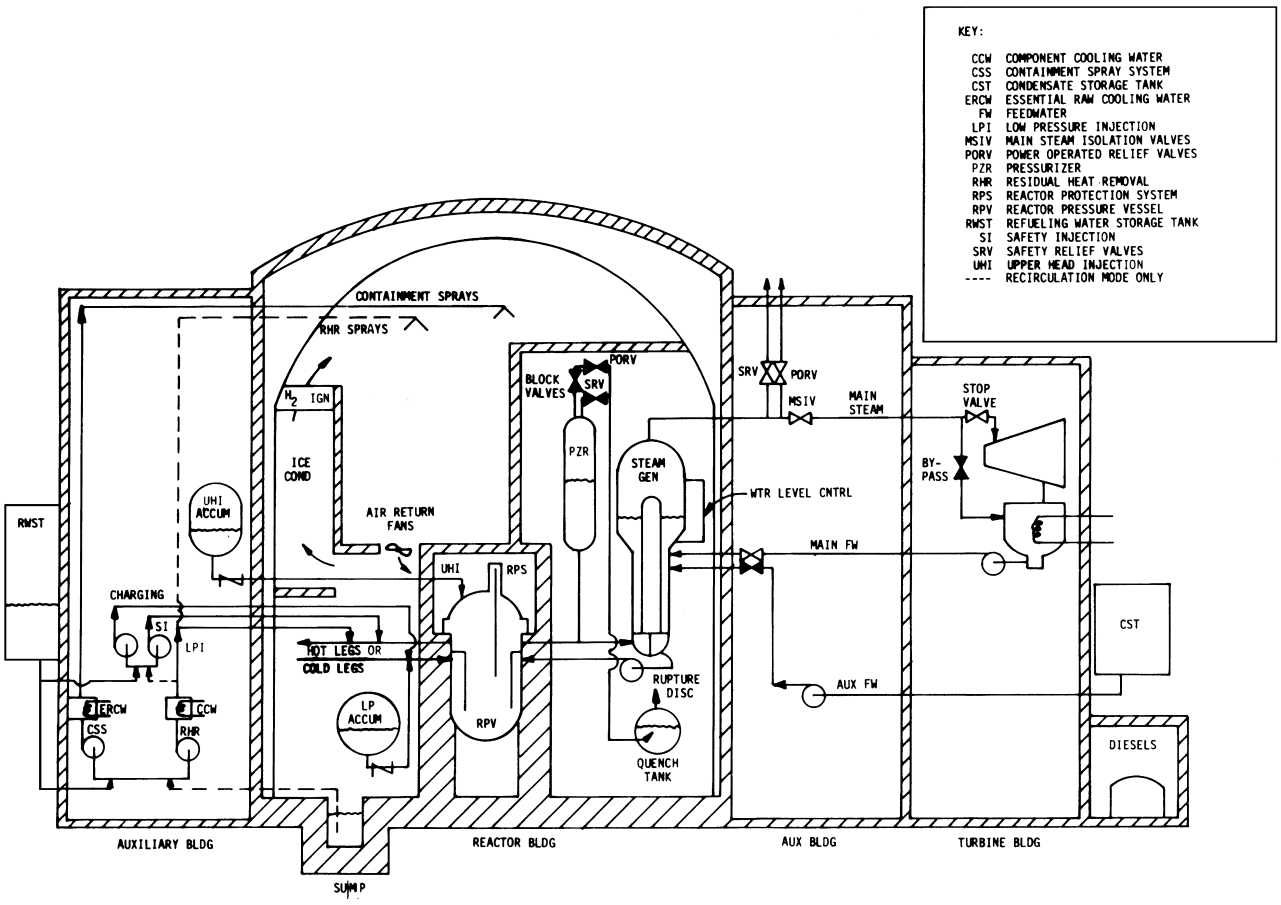

FIGURE 2 Ice condenser containment for a pressurized-water reactor.

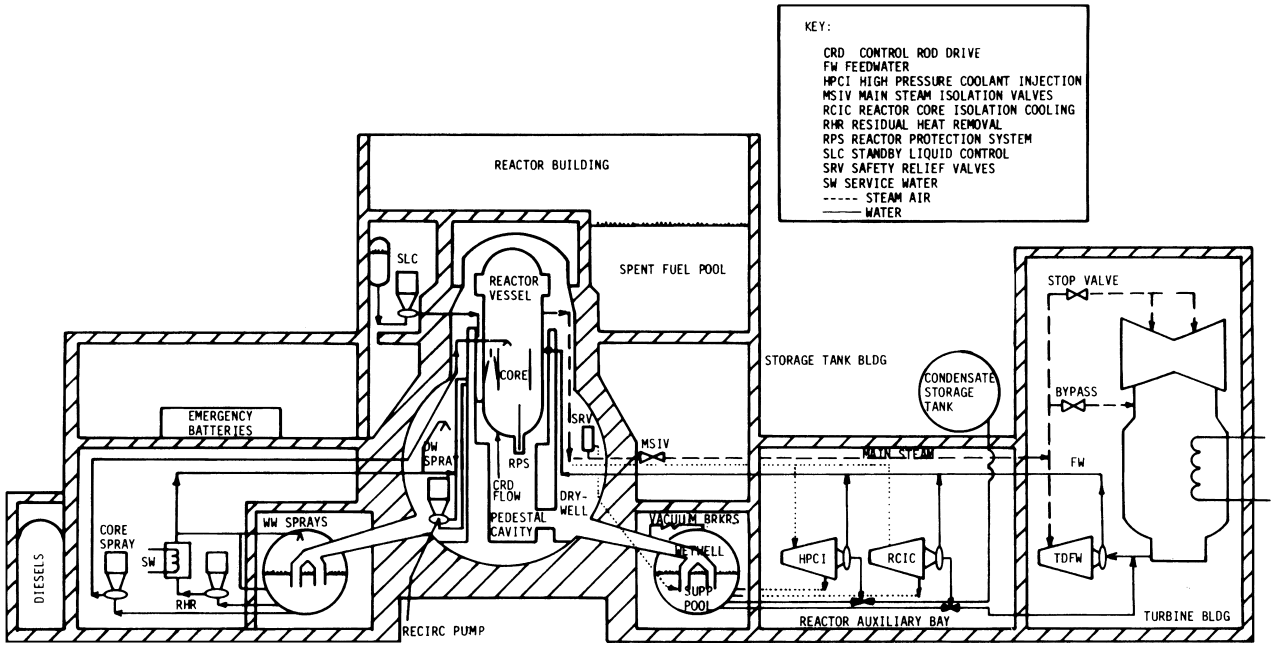

FIGURE 3 Mark I containment for a boiling-water reactor.

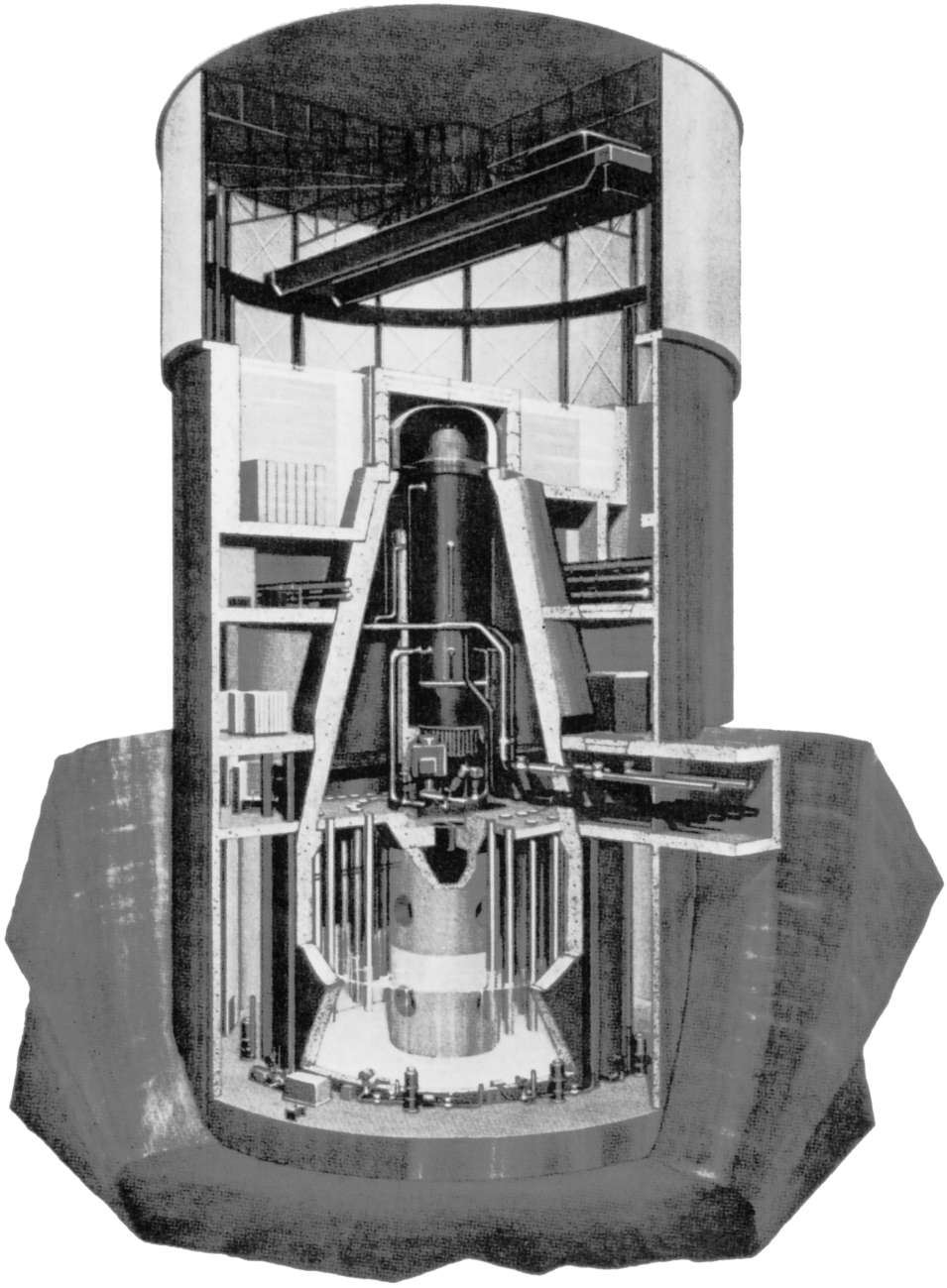

FIGURE 4 Mark II containment for a boiling-water reactor. (Courtesy General Electric Company.)

inability of the operators to diagnose the event and take appropriate corrective action resulted in severe damage to the core. Only minor release of radioactivity to the public occurred, with no loss of life or injury, but the cost to the utility for cleanup and replacement power was very large.

In piecing together the accident sequence at TMI-2, a special TMI-2 inquiry group, tasked by the NRC and headed by M. Rogovin, found that a similar sequence had been identified in the RSS as a potential core-melt contributor with a relatively high frequency of occurrence. Thus, it was thought that had the NRC and the industry paid more attention to the potential contribution of small-break LOCAs to core melt (especially stuck-open relief valves) and to the operation required to mitigate the event (also mentioned in the RSS), TMI-2 might have been averted. The President's Commission on the TMI-2 accident had similar conclusions. These conclusions, as well as the need to see if there where other sequences that might result in a

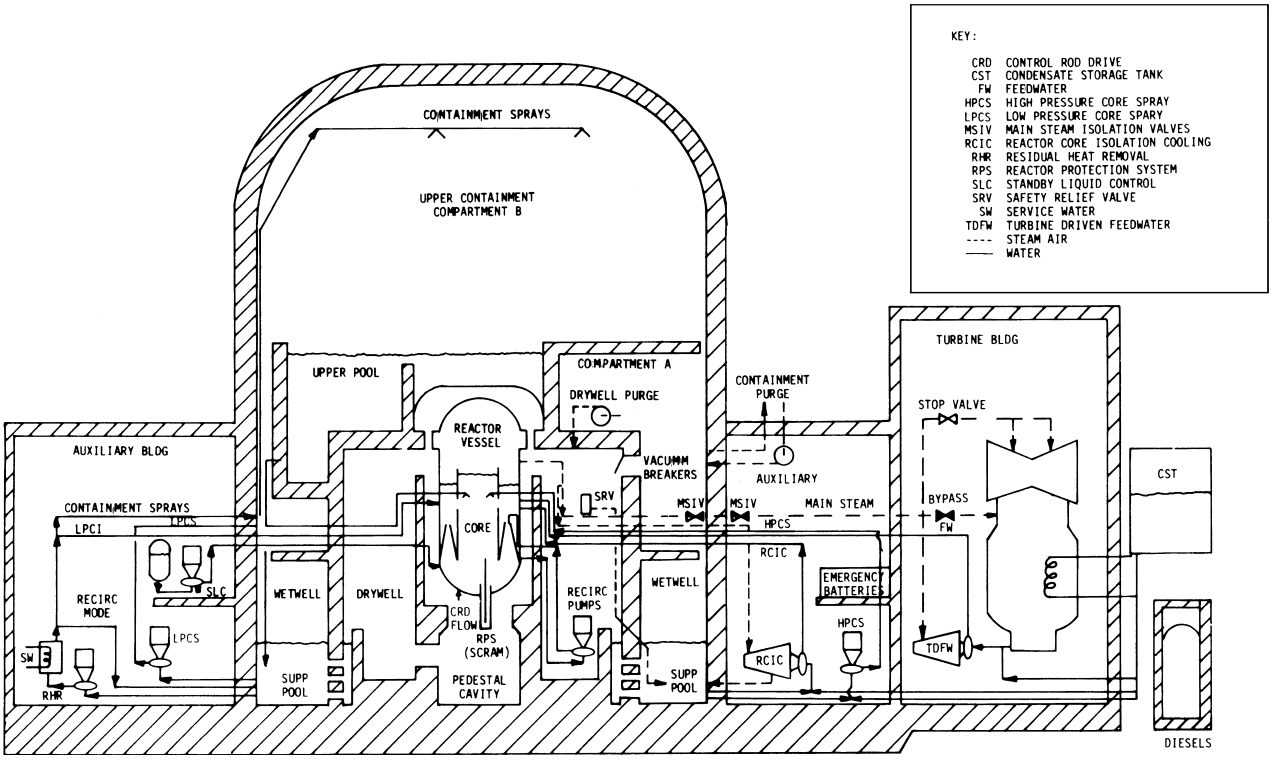

FIGURE 5 Mark III containment for a boiling-water reactor.

core-damage event like TMI-2, served to usher PRA into the mainstream of nuclear energy safety assessment.

Several plant-specific PRAs of varying complexity were soon initiated, both by the NRC and by the nuclear industry. Also, a joint effort was initiated between the NRC, the Institute for Electrical and Electronic Engineers (IEEE), and the American Nuclear Society (ANS) to produce and publish a procedures guide for performing PRAs.

D. Probabilistic Risk Analysis Procedures Guide

At the request of the NRC, the IEEE and ANS jointly produced a report entitled "The PRA Procedures Guide" (NUREG/CR-2300). Published in 1983, the report gave an overview of the probabilistic risk assessment process and identified acceptable techniques and practices for use. Intended as a reference document, the report covers the three levels of a PRA and discusses several methods for accomplishing the analysis. The three PRA levels are (1) system analysis, (2) system and containment analysis, and (3) system, containment, and consequence analysis.

E. Early Probabilistic Risk Analysis Studies

During this same period of time, several PRA studies were performed on a variety nuclear power plants. These studies had either the industry or the NRC or both as sponsors. As a follow-on to the two plants (a PWR and a BWR) that were covered in the RSS study, the NRC conducted the Reactor Safety Study Methodology Applications Program (RSSMAP), which consisted of level-2 PRA studies at five other reactors. The RSSMAP was conducted to assess risk impacts of the design differences between the five selected reactors and the two reactors studied in the RSS. Following the RSSMAP study, a second set of Level 2 studies was initiated by the NRC. These were entitled "The Interim Reliability Evaluation Program Study" (IREP), also with five plants. Simultaneous with these NRC-sponsored studies, several utilities sponsored studies of their own. Most of these were Level 3, or full-scope PRAs.

F. Nuclear Regulatory Commission Safety Goals

As a result of the recommendations of the President's Commission and the NRC reports on the TMI-2 accident, the NRC undertook to produce a policy statement on the subject of quantitative safety goals. The purpose was to address the question, "How safe is safe enough?" Begun in 1981, and after much deliberation and receiving input from the nuclear industry, consultants, and the NRC staff, the NRC issued a "Policy Statement on Safety Goals for the Operation of Nuclear Power Plants" in March 1983.

This policy statement consisted of two qualitative goals relating public fatalities from nuclear power plants to those of other electricity-generating plants. Several quantitative objectives were also suggested. This policy was evaluated by the NRC staff and the public for a period of two years. In August 1986, the Commissioners issued their final policy statement instituting the goals and objectives. The goals and objectives of this policy are stated in the following.

1. Qualitative Safety Goals

- Individual members of the public should be provided a level of protection from the consequences of nuclear power plant operation such that individuals bear no significant additional risk to life and health.
- Societal risks to life and health from nuclear power plant operation should be comparable to or less than the risks of generating electricity by viable competing technologies and should not be a significant addition to other societal risks.

2. Quantitative Health Objectives (QHOs) for Individual and Societal Mortality Risks

- The risk to an average individual in the vicinity of a nuclear power plant of prompt fatalities that might result from reactor accidents should not exceed one-tenth of one percent (0.1%) of the sum of prompt fatality risks resulting from other accidents to which members of the U.S. population are generally exposed.
- The risk to the population in the area near a nuclear power plant of cancer fatality that might result from nuclear power plant operation should not exceed one-tenth of one percent (0.1%) of the sum of cancer fatality risks resulting from all other causes.

Additionally, several quantitative guidelines were also proposed by the policy statements:

- *Plant Performance Guideline*—Proposed in the 1983 Policy Statement of Safety Goals, the likelihood of a nuclear reactor accident that results in a large-scale core melt should normally be less than one in 10,000 per year of reactor operation. This guideline has since been accepted for use by the NRC as a subsidiary benchmark for accident prevention in examination of regulatory issues.
- *Benefit-Cost Guideline*—Proposed in the 1983 Policy Statement of Safety Goals, the benefit of an incremental reduction of risk below the numerical guidelines for societal mortality risks should be compared with the associated costs on the basis of $1,000 per man-rem averted. This guideline did not appear in the 1986 Policy Statement of Safety Goals.
- *General Performance Guideline*—Proposed in the 1986 Policy Statement of Safety Goals, this guideline would limit the overall mean frequency of a large release of radioactive material to the environment from a reactor accident to less than 1 in 1,000,000 per year of reactor operation. However, subsequent research found this guideline to be significantly more restrictive than the QHOs and has been dropped from further consideration.

G. Policy Statement on Severe Reactor Accidents

In 1985, the NRC issued a policy for defining how safety issues related to severe reactor accidents would be resolved. Although its main focus was the related to these issues for new plants, it also provided guidance on how to handle severe accident issues for existing reactors.

H. NUREG-1150—Severe Accident Assessment of Five U. S. Nuclear Power Plants

As part of the NRC examination of severe accidents and recognition that the technology had progressed substantially since the Reactor Safety Study, the NRC performed a comprehensive risk evaluation of five nuclear power plants—Surry, Peach Bottom, Sequoyah, Grand Gulf, and Zion. These five plants were selected as representative of the nuclear plant population at large, representing different reactor types (three pressurized water reactors and two boiling water reactors), multiple containment types (subatmospheric, ice condenser, suppression pool, large dry), and age. Also, the Surry and the Peach Bottom were examined in the Reactor Safety Study allowing a comparison of the RSS results against the results of this study, done 15 years later. Level 3 PRAs were performed for all five plants. Fires internal to the plant and natural phenomenon, such as severe winds and earthquakes, were also included in the risk evaluation for two plants.

I. Individual Plant Examinations

In the Policy Statement on Severe Reactor Accidents, the NRC concluded that reactors currently operating were safe. However, the NRC also recognized that a systematic evaluations using PRA may result in the identification of plant specific vulnerabilities to severe accidents that could be remedied with low-cost improvements. This led to the Individual Plant Examination program, where each nuclear plant was required to have a limited scope PRA performed in order to determine if it had vulnerabilities to

severe accidents. Frequency of core damage and the probability of containment failure (given core damage) was the primary focus of this study. Risk to the public was not evaluated.

J. PRA Policy Statement

In 1995, the NRC issued a policy on the use of probabilistic risk assessment methods in the regulatory activities of nuclear power plants. This policy stated that use of PRA technology should be increased in all regulatory matters in a manner that complements the deterministic approach to regulation that the NRC has traditionally used. The reduction of unnecessary conservatism in regulation was a particular focus of this policy statement. The continued use of the safety goals and guidelines for making regulatory judgments was also re-emphasized in the policy.

II. METHODOLOGY OF PROBABILISTIC RISK ANALYSIS

Probabilistic risk assessment involves the development of a set of possible accident sequences and determining the outcomes of those sequences. Developing these accident sequences for plant systems involves the use of event trees, which depict initiating events and combinations of system successes and failures. These event trees are analyzed in conjunction with fault trees, which depict the way a system fails. The qualitative results of an event tree–fault tree analysis can be quantified if sufficient failure frequency data exist. Dependent failures must be accounted for in the analysis to prevent underestimating the true risk. And finally, the ability of the containment to prevent a release due to a postulated core damage scenario from reaching the environment is evaluated along with the consequences to the environment and the public should such a release occur.

A. Accident Sequence Definition and Systems Modeling Process

The process involved in accident sequence definition and systems modeling can be summarized as the performance of nine tasks.

1. Establishment of Clear Study Objectives

In order to have PRA results that are responsive to issues of interest, some time must be spent at the beginning to determine the objectives of the study. The scope of the study can be any of three levels, ranging from estimation of core damage frequency (Level 1) to health effects to the public (Level 3). Other questions of scope include consideration of external events (wind, earthquakes, etc.), internal environmental issues (fires in the building and flooding due to pipe breaks, etc.), and the operating state of the reactor (full or low power, shutdown, or refueling). Initial decisions on the risk aspects to be examined by the analysis will influence how the analysis is to be conducted.

2. Plant Familiarization (Information Gathering)

Once the scope of the analysis is determined, the task of gathering information for the analysis begins. Information is needed regarding the systems, their operation under normal, transient, and accident conditions; system interties and support functions; operator actions under transient and accident conditions; maintenance practices and procedures; and equipment performance history. System drawings and descriptions, operating history, operating procedures and training, maintenance procedures, and equipment maintenance histories are only a few of the resources available to the analysts.

3. Definition of Safety Functions

The definition of the safety functions for the plant systems are then determined. This definition is needed to correctly structure the system models. Most, if not all, system safety functions are derived from the four general safety functions stipulated in current regulations: (1) Accomplish and maintain successful reactor shutdown when needed; (2) maintain integrity of the reactor coolant piping; (3) ensure emergency core cooling is available when needed; (4) provide long-term decay heat removal from the core.

4. Selection of Initiating Events

Next, the initiating events for the plant are identified and categorized for input to the analysis. Although there is, in theory, a large number of initiators for a nuclear power plant (for example, there are thousands of components that can fail), the unique plant responses to these potential initiators are few. This is because the plant will respond in a similar manner to a wide variety of failures or events, allowing these failures or events to be combined together under a single initiator category. Industry studies on initiators, based on the nuclear industry's past operating history, are available, along with estimated frequencies. These generic industry categories and frequencies can then be supplemented with the specific operating history of the plant being analyzed.

5. Evaluation of Plant Response to Initiating Events

Once the initiating event categories are defined, the plant response to those categories is determined to identify the systems, equipment, and operator actions needed to respond to that particular initiating event category. This response information can be obtained using detailed computer models of the plant, by review of the plant's operating history, and through conversations with experienced operations, maintenance, training, and design personnel.

6. Delineation of Accident Sequences (Development of Event Trees)

An event tree is a loosely constructed map of plant events (either system or function response) that would follow an initial event. These are placed at the top of the event tree in some logical order. The most common way is the order in which the events are expected to occur, for example, a time sequence. Figure 6 is an example of a simple event tree. The event can succeed or fail when called upon, denoted as a branch point on the event tree. Each end point of the event tree defines a sequence of event successes and failures leading to an acceptable or unacceptable plant configuration. Unacceptable conditions include a range of possibilities, usually noted as different plant damage states. The probability of each branch point in the event tree is often evaluated with techniques of system reliability assessment.

7. Definition of Success and Failure Criteria

In order to quantify the frequency of failure for a system, it must first be determine what constitutes a system failure. This is usually quite simple to identify—failure to provide any electric power or water when needed are most common. However, some degraded system operation may represent failure under certain circumstances. Also, proper success and failure criteria reflect the need for a system that was operating prior to the accident to continue operating or to switch modes (from low-to high-speed fan operation) during the accident. Other systems are for emergency only and must start and run in response to the accident. Still other systems must operate only for a few moments (a circuit breaker opens), whereas others must operate for hours or days (decay heat removal). All such issues must be addressed in determining the proper success and failure criteria for a system.

8. Identification of the System Model Top Events (Fault Tree Top Event)

This step is simple an extension of defining the system success and failure criteria. For example, if the failure criteria for a system is failure to provide water for 10 hours, then the top event for that system model is "Failure to provide water for 10 hours." The system model is then developed with events and component failures that combine to result in that top event.

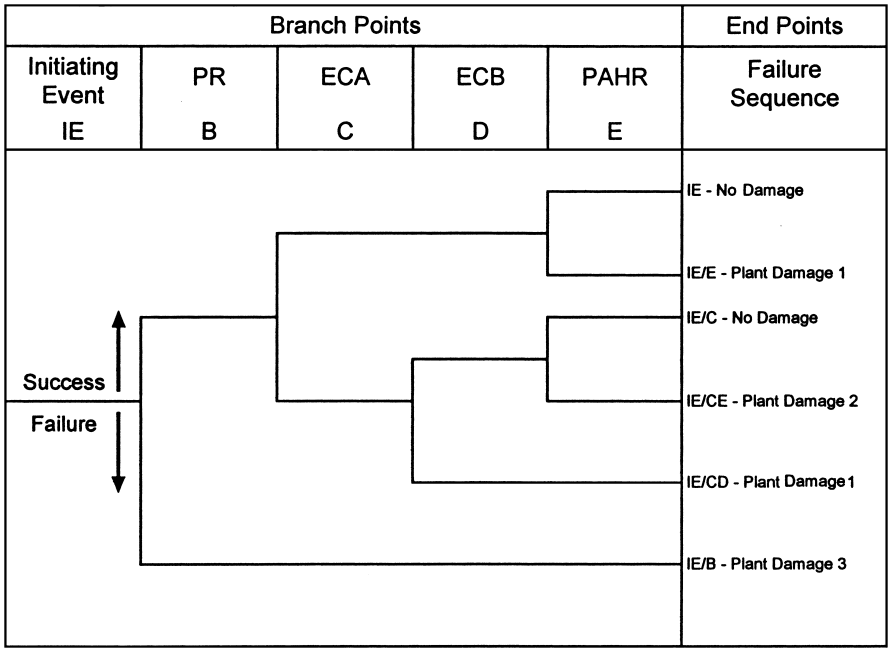

FIGURE 6 Event tree. RP, operation of the reactor protection system; ECA, emergency coolant pump A; ECB, emergency coolant pump B; PAHR, post-accident heat removal system operation.

9. Development of Systems Models (Fault Tree Development)

A general objective of a system reliability assessment is to determine the susceptibility of a system or of groups of systems to conditions of design, operation, test, and maintenance that could lead to that system's failure. One of the most useful techniques for modeling system failure behavior is the fault tree technique.

A fault tree is constructed so that the fault or undesired event is the top event in the tree. Failures or events that could lead to that top event are then shown, linked using graphical Boolean logic operators. These failures and events are then further decomposed until the fault tree consists of the lowest level failures and events for which failure frequency data exists. Any combination of fault events that causes the top event is called a cut set, and the smallest combination of fault events that causes the top event is a minimal cut set. These minimal cut sets, represented by Boolean equations, form the basis for the evaluation of all plant and system fault tree models. An example of a fault tree is represented in Fig. 7. Figure 8 defines the commonly used fault tree symbols (graphical Boolean logic operators).

Other methods of PRA systems analysis, such as failure modes and effects analysis, reliability block diagrams, and the GO methodology, were attempted in the past without much success. The current practice overwhelmingly used now is some combination of event trees and faul trees.

B. Data Collection

To quantify sequence event trees and system fault trees, failure frequency data for initiating events, component failures, and human errors must be determined. For plants that have several years of operational experience, the information can be found in the operations and maintenance historical records. Operational problems and information, equipment repair frequency, and equipment operating time provide data sources for initiating event and component failure frequencies. Maintenance records also provide frequency and interval information for equipment being out of service for planned and unplanned maintenance and repair. Training information can provide insights into potential errors during operation and maintenance. For new plants that have not yet accumulated a significant operating history, extensive generic failure frequency information is available. Using Bayesian reliability techniques, this generic information can then be updated with plant-specific information as the plant begins to accumulate operating time.

C. Dependent Failures

Dependent failures in nuclear reactor risk analysis are of concern primarily because the independence and redundancy in the design of a safety system for a nuclear reactor require multiple, random component failures in order to cause a system failure without dependent failures. However, if dependent failures are possible, a single dependent failure may cause a system failure by causing several of the redundant components or subsystems to fail simultaneously. The three categories of dependent failures are (1) system interactions, (2) external events, and (3) human interactions.

1. System and Component Interactions

This dependent failure category includes functional and shared-equipment dependencies between systems and components, interaction dependencies between systems and components, and intercomponent dependencies at the system or subsystem level. These interactions are more of a physical nature and can be identified though the careful mapping of component interties and locations. However, there are other dependency considerations that are not readily identifiable. For example, improper maintenance on redundant components introduces a dependency that adversely affects the overall reliability of that system. The most common means used in accounting for these less readily identifiable impacts is the parametric methods. These methods utilize extensive equipment failure history evaluation to determine what portion of the total failure population can be attributed to common component failures. The results of these parametric studies are then modeled for use in the quantification of equipment and system failure. The most prevalent parametric methods now used in risk studies are the multiple Greek letter method and the alpha method.

2. External Events

External events include floods, earthquakes, and fires, which may cause simultaneous system failures. Each are treated separately and are design specific.

3. Human Interactions

In this case, human actions can intervene in the failures in such a way as to defeat the independent and redundant designs.

Tables I and II indicate the methods for dependent failures and their applicability to various dependency situations.

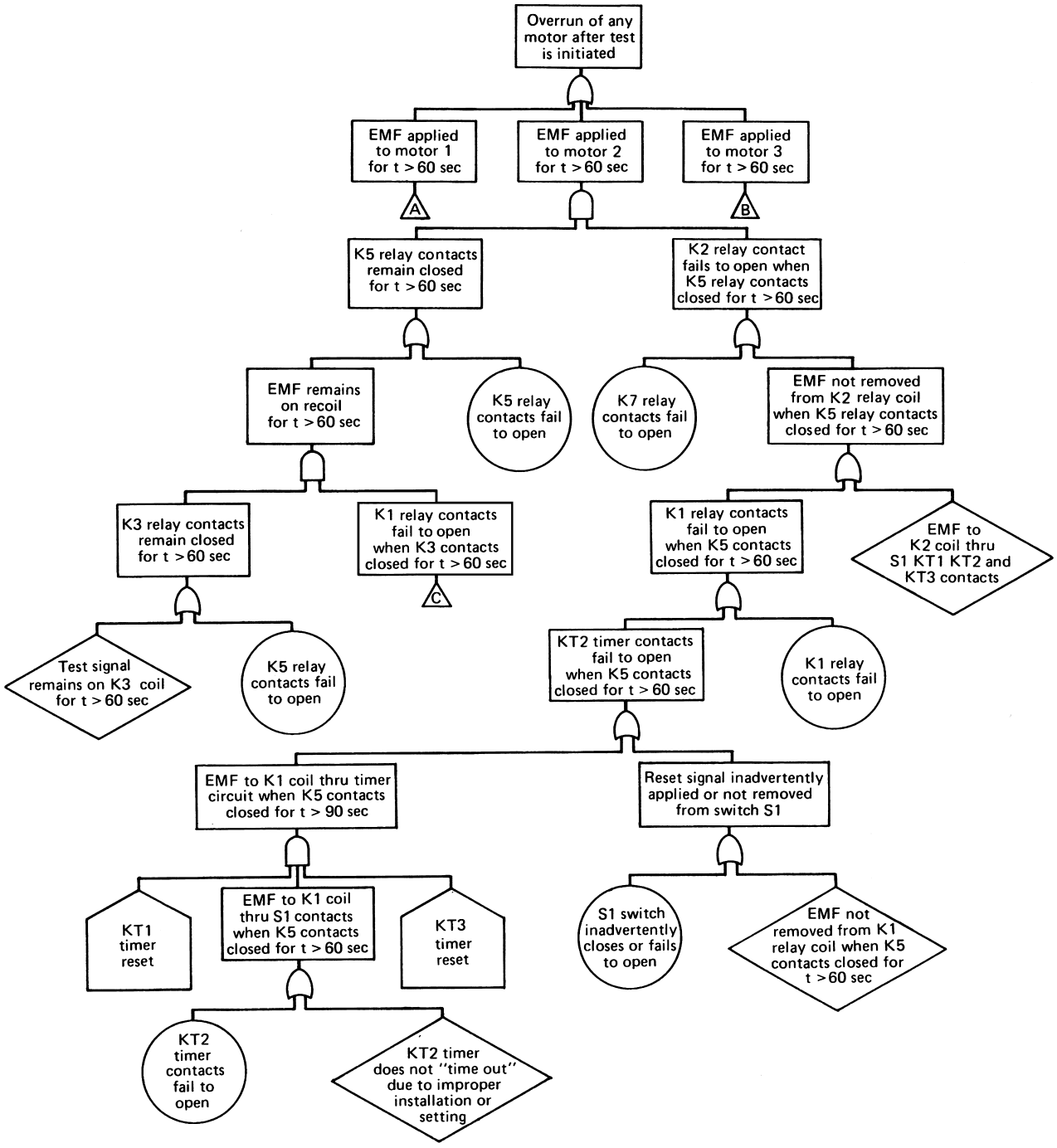

FIGURE 7 Example fault tree for overrun of motor 2.

D. Quantification

After the system models and event trees have been developed and failure frequency data is prepared, the models and trees are quantified, using various algorithms, to determine failure cut sets. Because the size of models and trees for a nuclear plant can be very large, the formulation of failure cut sets is done by large computer codes. These cut sets define the combination of system, equipment, and human failures that result in core damage and, therefore, illustrate the "weak points" in the overall plant. These cut sets, by themselves, represent qualitative

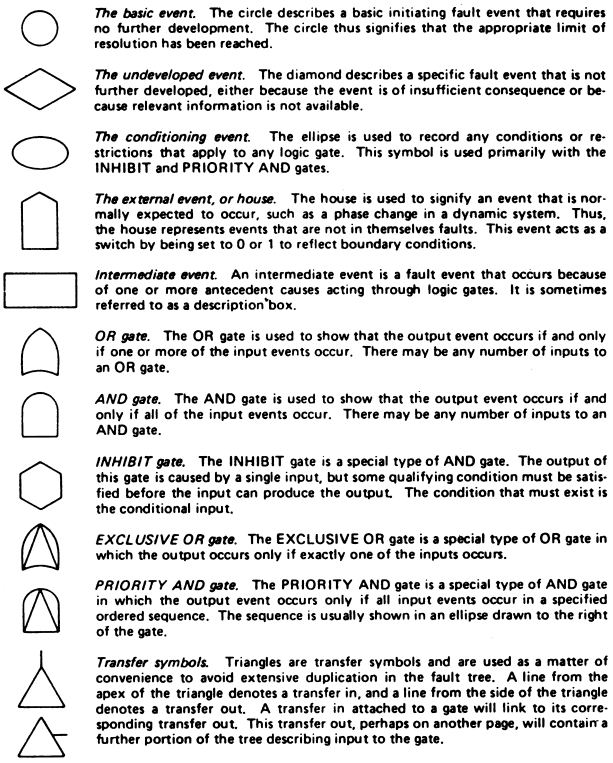

The basic event. The circle describes a basic initiating fault event that requires no further development. The circle thus signifies that the appropriate limit of resolution has been reached.

The undeveloped event. The diamond describes a specific fault event that is not further developed, either because the event is of insufficient consequence or because relevant information is not available.

The conditioning event. The ellipse is used to record any conditions or restrictions that apply to any logic gate. This symbol is used primarily with the INHIBIT and PRIORITY AND gates.

The external event, or house. The house is used to signify an event that is normally expected to occur, such as a phase change in a dynamic system. Thus, the house represents events that are not in themselves faults. This event acts as a switch by being set to 0 or 1 to reflect boundary conditions.

Intermediate event. An intermediate event is a fault event that occurs because of one or more antecedent causes acting through logic gates. It is sometimes referred to as a description box.

OR gate. The OR gate is used to show that the output event occurs if and only if one or more of the input events occur. There may be any number of inputs to an OR gate.

AND gate. The AND gate is used to show that the output event occurs if and only if all of the input events occur. There may be any number of inputs to an AND gate.

INHIBIT gate. The INHIBIT gate is a special type of AND gate. The output of this gate is caused by a single input, but some qualifying condition must be satisfied before the input can produce the output. The condition that must exist is the conditional input.

EXCLUSIVE OR gate. The EXCLUSIVE OR gate is a special type of OR gate in which the output occurs only if exactly one of the inputs occurs.

PRIORITY AND gate. The PRIORITY AND gate is a special type of AND gate in which the output event occurs only if all input events occur in a specified ordered sequence. The sequence is usually shown in an ellipse drawn to the right of the gate.

Transfer symbols. Triangles are transfer symbols and are used as a matter of convenience to avoid extensive duplication in the fault tree. A line from the apex of the triangle denotes a transfer in, and a line from the side of the triangle denotes a transfer out. A transfer in attached to a gate will link to its corresponding transfer out. This transfer out, perhaps on another page, will contain a further portion of the tree describing input to the gate.

FIGURE 8 Common fault tree symbols.

information of how core damage can occur. If the frequency of core damage is the object of the study, the minimal cut sets can be quantified using failure rate information and standard Boolean algebra algorithms. Available computer code packages are generally able to perform both qualitative and quantitative computations.

E. Containment Analysis

Sequence event trees trace the success or failure of active plant systems from initiating events, through the success or failure of systems and equipment, to a plant damage state (usually either a stable, intact core or core melt). A containment event tree is basically a continuation of the sequence event tree where it describes the accident progression from where the sequence event tree ends (e.g., the start of core melt) to the release of radionuclides after containment failure. Special emphasis is placed on events that result in containment damage or in some way affect the release of radionuclides to the environment.

1. Issues Typically Addressed on a Containment Event Tree

Containment event trees are intended to systematically deal with phenomena that occur during the accident progression by addressing the following areas.

1. Events that occur before core melt. For example, has hydrogen (a combustible gas) been generated, are containment penetrations sealed, and are the containment pressure suppression devices working?
2. Events that occur in the reactor vessel during the core melt. For example, is hydrogen being generated, is water present in the reactor vessel, is the core melt progressing, what pressures in the reactor vessel are being generated, and what is the condition of the reactor vessel?
3. Events that occur outside the reactor vessel if the vessel fails due to the core melt. For example, is water present in the bottom of the containment, what is the steam pressure in the containment, is hydrogen being generated, where is the melted fuel being deposited, is the containment floor being perforated, what chemical interactions are taking place between the melted fuel and the containment materials, and have the containment pressure suppression systems been activated or been bypassed?
4. Events related to the disposition and coolability of the final melted core debris. For example, is debris cooling available, what percentage of penetration of the containment floor has occurred, and have containment pressure suppression systems been bypassed?

The importance of some of these questions is highlighted in later sections.

2. Quantification of Containment Event Trees

The quantification of the branch points of containment event trees is usually not as straightforward as that for sequence event trees. Usually the containment branching points deal with complex physical processes, which must be calculated deterministically by means of special accident modeling codes combined with the judgment of experts in core-damage phenomenology. The degree of "belief" in the result represents the branch point probability. As an example, the calculation may predict that the molten core will have an interaction with concrete if certain conditions on temperature and core debris thickness are met. The likelihood that these temperature and thickness conditions are present represents the probability that chemical interactions will occur. Because much subjective judgment is required to supplement the available knowledge of the latest scientific research on core-melt phenomena, substantial uncertainty can be present in the results.

Although the results from the containment event tree can contain substantial uncertainty, this uncertainty can be quantified. With the amount of uncertainty known, the degree of containment integrity calculated by the containment event tree can provide a major key in determining whether public safety is threatened in the event of an accident.

TABLE I Applications of Analytical Methods to Dependent Failures[a]

		Intersystem dependencies				Intercomponent dependencies			
Method of analysis	**1 Common-cause initiators**	**2A Functional dependencies**	**2B Shared equipment**	**2C Physical interactions**	**2D Human interactions**	**3A Functional dependencies**	**3B Shared equipment**	**3C Physical interactions**	**3D Human interactions**
Event Specific	X			X				X	X
Event tree analysis		X	X		X	b	b		
Fault tree linking	X	X	X		X	c	c	c	c
Fault tree cause analysis					X	b	b		
Human reliability					X				
Multiple greek letter									
Alpha factor								X	X
Qualitative search procedures	X		X	X				X	X

[a] See Table II for detailed descriptions of dependencies.
[b] Accounted for by standard fault tree and event tree methods.
[c] Linking of fault trees implies that the dependencies are between systems.

TABLE II Detailed Descriptions of Dependencies

Type	Description
	Common-cause initiating events (external events)
1	External and internal events that have the potential for initiating a plant transient and increasing the probability of failure in multiple systems. These events usually cause severe environmental stresses on components and structures. Examples include fires, floods, earthquakes, loss of offsite power, aircraft crashes, and gas clouds.
	Intersystem dependencies
2	Events or failure causes that create interdependencies among the probabilities of failure for multiple systems. Stated another way, intersystem dependencies cause the conditional probability of failure for a given system along an accident sequence to be dependent on the success or failure of systems that precede it in the sequence. There are several subtypes of interest in risk analysis.
2A	*Functional dependencies.* Dependencies among systems that follow from the plant design philosophy, system capabilities and limitations, and design bases. One example, is a system that is not used or needed unless other systems have failed; another is a system that is designed to function only in conjunction with the successful operation of other systems.
2B	*Shared-equipment dependencies.* Dependencies of multiple systems on the same components, subsystems, or auxiliary equipment. Examples are (a) a collection of pumps and valves that provide both a coolant-injection and a coolant-recirculation function when the functions appear as different events in the event tree and (b) components in different systems fed from the same electrical bus.
2C	*Physical interactions.* Failure mechanisms, similar to those in common-cause initiators, that do not necessarily cause an initiating event but nonetheless increase the probability of multiple-system failures occurring at the same time. Often they are associated with extreme environmental stresses created by the failure of one or more systems after the initiating event. For example, the failure of a a set of sensors in one system can be caused by excessive temperature resulting from the failure of a second system to provide cooling.
2D	*Human interaction dependencies.* Dependencies introduced by human actions, including errors of omission and commission. The persons involved can be anyone associated with a plant life cycle activity, including designers, manufacturers, constructors, inspectors, operators, and maintenance personnel. A dependent failure of this type occurs, for example, when an operator turns off a system after failing to diagnose the condition of the plant correctly—an event that happened during the Three Mile Island accident when an operator turned off the emergency core-cooling system.
	Intercomponent dependencies
3	Events or failure causes that result in a dependency among the probabilities of failure for multiple components or subsystems. The multiple failures of interest in risk analysis are usually within the same system or the same minimal cut set that has been identified for a system or an entire accident sequence. Subtypes 3A, 3B, 3C, and 3D are defined to correspond with subtypes 2A, 2B, 2C, and 2D, respectively, except that the multiple failures occur at the subsystem and component level instead of the system level.

F. Fission Product Release and Transport within the Reactor System

In the Reactor Safety Study, it was determined that little, if any, risk to the public (deaths or detrimental health effects) would result if the core (fuel pins) of the nuclear reactor remained intact. Thus, the melting of the core was the only process in which one of the major barriers against radioactivity release would be breached. Even though a core-melt accident is extremely unlikely, it will be discussed here because it is the only contributor to public risk.

1. Melt-Through to the Containment Floor

The core of a PWR is an open array of zirconium alloy-clad fuel rods clustered into square arrays (14-17) called fuel bundles. Within each bundle are hollow tubes into which neutron absorbers (control rods) are inserted or withdrawn (to control the chain reaction) by mechanisms above the core. Two processes can cause the core to melt, and, in general, the amount of fission-product release is the same for each. These mechanisms are (1) insufficient coolant flow for the power generated (e.g., LOCA) or (2) power-coolant mismatch due to rapidly increased power level. In either case, the water level drops due to boil off and the exposed fuel heats up. Phenomena affecting the rate of heat-up are the decay heat level, the fission power in the case of failure to scram, the zirconium oxidation at high temperatures, convective heat transfer to steam and hydrogen, radiative heat transfer to steam, and radiative heat transfer to the structures. As the fuel heat-up proceeds, the cladding swells and ruptures and eventually melts. The fuel (uranium dioxide) then begins to melt, slump, and resolidify in the lower, cooler portions of the core. This resolidification can result in further coolant blockage through the core, further aggravating the situation. If no mitigation occurs, the molten fuel region is expected to grow, and it eventually leaves the original core region and enters the lower plenum of the reactor vessel.

As the molten core enters the lower plenum, a reaction with the water remaining in the bottom of the vessel will produce steam. This interaction may or may not result in significant energy release, depending on the rate of molten fuel entry, the amount of water present, and other

subtle conditions. If the event is violent, there is a potential for breach of the reactor vessel. However, research performed in the 1990s has shown that in most reasonably expected circumstances, the interaction is expected to be benign, and the water will boil off, allowing the molten fuel to contact the steel reactor vessel. Should this occur, the molten fuel could melt through the reactor vessel or the lower instrument guide tubes and onto the floor of the containment, allowing fission products to be released into the containment.

A BWR fuel melt would progress in a similar manner as a PWR melt, but it might proceed at a slower pace because the fuel assemblies are smaller and shrouded, which would effectively isolate the melting as long as the shrouds remained intact. Also, the shrouds would act as heat sinks, slowing the melting process. The control rod mechanisms in a BWR enter from the bottom of the reactor vessel, and these provide the most likely path for the molten core to penetrate the reactor vessel.

The likelihood of melt-though of the vessel has been a topic of international study beginning in the late 1990s. The research was initiated to better define the phenomenology of vessel melt-through and to incorporate this information into severe accident computer codes.

2. Containment Failure

One of the key findings of severe accident research has been the importance of the timing of containment failure. If the containment fails late in the sequence (days after initiation), there is time for the short-lived radioactivity to decay while still contained, thus reducing the release to the environment when late failure does occur. If the containment fails early, this short-lived radioactivity has not had time to decay, resulting in much higher releases to the environment. Several mechanisms of containment failure, and their timing, have been reviewed in the severe accident research performed in the 1990s. If the molten fuel escapes the vessel and reaches the containment floor, the progress of the accident and its effect on containment depends on whether water is present at the bottom of the containment and on the design of the containment structure. The presence of water depends on the containment design and the accident sequence that prompted the core damage. The interaction of molten fuel with the water could result in fuel fragmentation, rapid heat transfer, and rapid steam production. If this violent reaction occurred, the sudden over-pressurization could produce some mode of early containment failure. Although a very serious result, research performed in the late 1990s indicates the likelihood of this violent reaction is very low. More likely, it would result in a benign reaction in which steam is produced at a slow rate. If this occurs, and the debris bed is coolable, it is unlikely that containment failure would occur.

If the molten fuel debris bed cannot be cooled or if water is not present, then a thermal–chemical interaction between the fuel and the concrete base mat of the containment (fuel–concrete interaction) is possible. Such an interaction would release noncondensable and even combustible gases, and late containment failure by base mat penetration or over-pressurization could follow. This could present the still unlikely situation of a slow increase in containment pressure resulting in a late containment failure.

In plants that do not have inerted containments, combustion of the hydrogen gases formed could take place. This could be rapid (explosive) or slow (deflagration). The former might cause shock waves, leading to rapid containment failure; the latter to higher gas pressures and temperatures in containment, which might contribute to containment over-pressurization failure. Ice condenser containment designs have hydrogen ignitors present to prevent hydrogen explosions. Also, because of their design, ice condenser containments are less likely to have water present after vessel melt-through.

The behavior of molten fuel in BWRs (three containment types: Mark I, II, and III) is similar to that in PWRs with a few exceptions. Mark I and II types have small volumes, which make them more susceptible to over-pressurization, but they have inert atmospheres, which essentially disallows hydrogen burning. Mark III containments are larger and have lower design pressures and are more likely to contain water. Also, Mark III containments are not inerted, so hydrogen burning is possible. All Mark III containments have some form of hydrogen control to prevent burning.

Another early containment failure mode was postulated as a result of the NUREG-1150 work, that failure mode being direct containment heating. This was postulated to occur due to the melted fuel being ejected from the vessel under high pressure, resulting in high fragmentation of the debris. These small fragments would then allow high, rapid heat transfer to the containment atmosphere, resulting in rapid pressure increase and early containment failure. However, international research in the late 1990s has shown that the likelihood of this particular containment failure mode is remote.

Throughout the accident, mitigative measures are available which can significantly affect the containment failure likelihood. Large, dry containments have spray systems or fan coolers (or both) to cool the gases and condense the steam. In addition, steam will condense on walls and other structures in the containment. Ice condenser containments (smaller volumes) make use of ice instead of sprays and fans to cool gases and condense steam. Research has

shown the containments for nuclear power plants have a very robust design and are unlikely to fail under severe accident phenomenon.

3. Radionuclide Release Mechanisms

The result of a containment failure during a severe accident is the release of radionuclides to the environment. However, the analysis of the release and transport of radionuclides starts when the core degradation begins. Sources of radionuclides are fission products and radioactive structural materials such as cladding, control rod materials, core supports, and instrument tubes.

Several forms of radioactivity release are possible.

1. *Cladding rupture release:* Mostly noble gases and volatile fission products released from the fuel-cladding gap.
2. *Diffusion release:* Radioactive materials diffusing from the fuel after the cladding has been breached.
3. *Leach release:* Radionuclides leached out when coolant water contacts the unclad fuel.
4. *Melt release:* Radionuclides contained in melting fuel and structural materials.
5. *Fuel–concrete interaction release:* Radioactive gases produced when molten core and structural material interact with concrete.
6. *Fragmentation release:* Fragmentation and oxidation of fuel constituents when molten fuel contacts cool liquids, such as water.

Not all of these release mechanisms are present in all accidents. It is known that the chemical and physical forms of the released radionuclide and its surroundings will greatly influence the transport from the damaged fuel, to the containment, and possibly, on to the environment.

4. Radionuclide Transport

Two aspects of radioactive nuclide transport are generally considered in risk analyses: (1) transport within the reactor coolant system and (2) transport within containment. If the reactor coolant system remains intact, the release from the damaged fuel remains inside the reactor coolant system where two physical forms are considered: vapor and particulates. Vapors can condense on surfaces or react chemically with the water or steam, themselves forming particulates or suspensions, or they may pass through the coolant and collect in gas spaces in the coolant system. Particulates can agglomerate, precipitate out, chemically react, or be carried with the coolant stream. If the release is within containment, material suspended in the containment atmosphere can be removed by various engineered safety safeguards, such as sprays, filters, ice condensers, or suppression pools, depending on the type and design of containment.

TABLE III Radionuclide Classification Scheme for Severe Accidents

Category	Radionuclide
Noble gases	Xe, Kr
Halogens	I, Br
Alkali metals	Cs, Rb
Tellurium group	Te, Se, Sb
Ba, Sr	Ba, Sr
Noble metals	Ru, Mo, Pd, Rh, Tc, Co
Lanthanides	La, Nd, Eu, Y, Pr, Pm, Sm, Zr, Nb, Cm, Am
Cerium	Ce, Pu, Np

Because the formation of hundreds of isotopes is possible, the radionuclides are generally classified on the basis of their chemical behavior. Table III shows the groups that could be used to evaluate design basis accident source terms. The modeling of the behavior of these groups presents one of the most challenging parts of nuclear risk analysis. Since the Three Mile Island accident, considerable effort has been devoted to reexamining the "source term" issue, which is essentially the process of more realistically representing the release fractions and transport behavior of the nuclides listed in Table III. International programs have studied these issues extensively in the 1990s and the results of this research has resulted in a fundamental revision of the source term basis used for siting and designing reactors for possible accidents.

G. Environmental Transport and Consequence Analysis

The final link between the engineering and operation analysis of the reactor and the risk to the public is the transport of the radionuclides from a failed containment to the environment and finally to humans. This is termed consequence modeling. This modeling begins with the grouping of potential accident sequences for each release category. Because the sequence frequencies have been determined from event tree and fault tree analysis, this grouping provides the frequency of occurrence of each release category. Also included is the likelihood of a postulated breach in the containment boundary. The time, duration, and size of the breach are determined, as is the makeup of the radionuclides dispersed in the atmosphere based on the physical characteristics of the sequences in that category. The atmospheric dispersion to the environment is usually modeled using a Gaussian plume to calculate ground-level instantaneous and time-integrated concentrations of the deposited

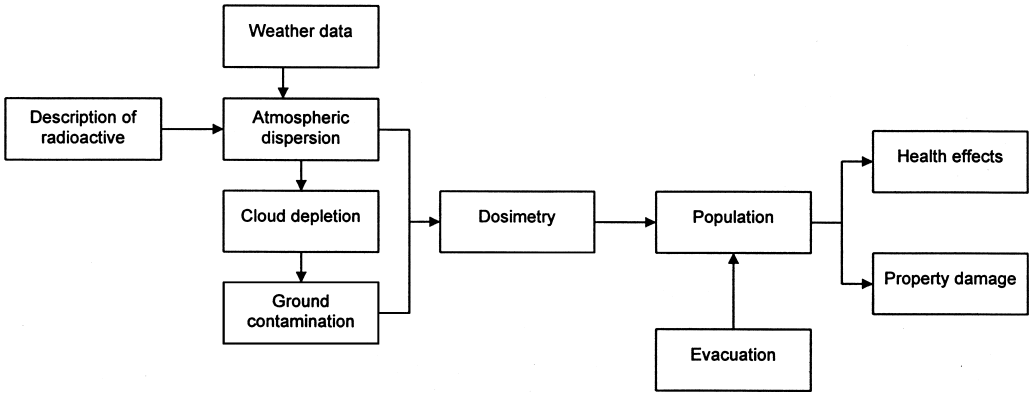

FIGURE 9 Schematic outline of a typical consequence model.

radionuclides and the resulting levels of radioactivity. The radioactivity is calculated as a function of time and distance from the reactor.

Ground deposition can occur by impact on obstacles or by precipitation. Calculations of the doses to humans, given in rems, consider both airborne particles and ground contamination and both external and internal exposures. Finally, these doses are combined with population distributions for the site to obtain the total person-rem exposures. Three categories of health effects are associated with these exposures: (1) early and continuing somatic effects, (2) latent somatic effects (cancers), and (3) genetic effects. Evacuation is important for reducing the number of people exposed and is usually incorporated into the models.

The dose–response models have been studied by several national and international bodies, and the choice of models is left to the analyst. In addition to the health effects, economic loss (property damage) is generally estimated. The economic loss arises from contamination of land, which leads to population evacuation relocation, the loss of agricultural use of the land, and decontamination costs. Figure 9 summarizes the consequence analysis aspects of the risk assessment.

III. SENSITIVITY AND UNCERTAINTY ANALYSIS

As indicated in the previous sections, every result in the analysis process has an associated uncertainty; some of these uncertainties can be large contributors to the overall uncertainty in the final risk. Also, the results of risk analyses generally are used in some form of decision process, whether it involves trade-offs or regulation or operation. Knowledge of the uncertainty in PRA results must be incorporated into the risk results if the decision process using the risk information is to be robust. Because the assessment of risk involves an extensive list of variables, it is also important to use comparison techniques, such as sensitivity analysis, to identify those variables whose uncertainty contributes most to the overall risk uncertainty. This will allow the analyst to attack a tractable problem within resource limitations.

Two types of uncertainty are generally considered in risk analysis. First is the random variability in some parameter or measurable quantity. The second is the imprecision of the analyst's knowledge about models, data, or the physical phenomena of the accident(s). Several types of uncertainty are listed in Table IV. Inconsistency in the statistics used in PRAs can also influence the uncertainty. The frequentist, or classical, approach and the subjectionist, or Bayesian, approach were both used in the initial years of PRA. However, the Bayesian approach has now been accepted as proper for PRA applications, so this uncertainty influence has been greatly reduced.

Contributors to uncertainty come from almost all areas of the process: (1) databases, (2) treatment of common-cause and common-mode failures (systems interactions), (3) treatment of external events (floods, wind, earthquakes), (4) treatment of human interactions, (5) modeling of core-melt phenomena, (6) modeling of steam and hydrogen explosions, (7) containment behavior, (8) calculation of radionuclide release fractions and dispersions, (9) health effects (dose–response) models, and (10) the overall completeness of the analyses.

The quantification of uncertainties involves the following steps: (1) evaluation and estimation of uncertainties in the input to each of the tasks of a PRA, (2) propagation of input uncertainties through each task, (3) combination of the uncertainties in the output from various tasks, and (4) display and interpretation of the uncertainties in the PRA results.

TABLE IV Types of Uncertainty

Category	Examples
Parameter	Data may be incomplete or biased. For example, are we sure that all relevant failures are counted, and do we know the total time interval or number of trials covered by these failures?
	Do the available data apply to the particular case? This raises the question of generic versus site-specific data.
	Is the method of analysis valid for the available data?
	Do the data apply to the situation being studied? For example, are all pumps in all plants in the data base expected to have the same general failure rate, or should each of the pumps have component specific failure rates?
Modeling	Is the model adequate? For example, do the binary event tree and the fault tree models adequately represent the continuous processes of the accidents?
	Is uncertainty introduced by the mathematical or numerical approximations that are made for simplification of the quantification process?
	If the model is valid for only a certain range of plant behavior, is the model being used outside that range?
Completeness	Have the analyses been taken to sufficient depth of study?
	Have all human errors and all common-cause failures been considered?
	Have all important physical processes been treated?
	Have all important accident sequences been considered?

Many methods are available for the evaluation, propagation, and combination steps, the selection of which depends on the information available. No single method or combination of methods has emerged as a "standard" approach. The most common method of displaying uncertainty results is a series of complementary cumulative distribution functions. Such a family of curves is shown in Figure 10, displaying 5, 50, 75, and 95% confidence interval curves. These can be supplemented with text or tabular information (or both).

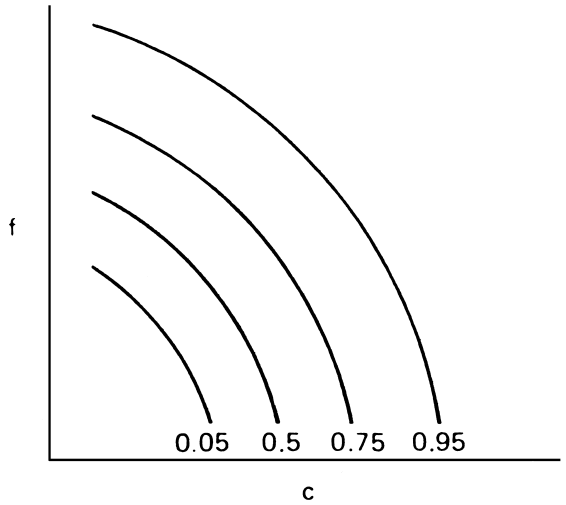

FIGURE 10 Display of uncertainties in a complementary cumulative distribution function—an *f/c* curve, where *f* is the frequency and *c* consequences. The values of 0.05, 0.75, and 0.95 represent confidence intervals (measures of uncertainties) about the median 0.50 curve. To read the curve, pick a consequence *c* from the 0.50 curve: the value *f* on the ordinate is the frequency that a consequence equal to or less than *c* will occur.

Although a necessary step in preparing and using a PRA, uncertainty analysis has historically been a controversial area. Some PRAs contain no uncertainty analysis, and others have extensive uncertainty analyses incorporated in the study. The quality of the uncertainty analysis remains one of the major issues in the use of PRAs for such purposes as licensing or design trade-offs.

IV. OPERATIONAL EXPERIENCE ANALYSIS

As the nuclear power industry has matured, the value in a more actuarial approach to risk analysis is possible. This maturation has been largely driven by the TMI-2 accident. During the investigation of the TMI-2 accident, it was found that virtually identical precursor events had occurred at two other reactors, one in the United States and one in Europe. The industry was not aware of the European event until after the TMI-2 accident and the investigation into the U.S. event, after it occurred, was found to be inadequate. In July 1979, the NRC established an agency wide Operational Data and Analysis Group tasked with the responsibility for analyzing and evaluating operational safety data for all nuclear power operations and to feed back lessons to improve safety and operations. As time went on, and the value in operational analysis was proven, the practices associated with this type of evaluation was slowly incorporated into the overall day-to-day practices of the NRC until there were no longer a need for a separate organization to perform operational analysis. In 1998, the activities of this organization were consolidated into other existing organizations of the NRC.

V. INSIGHTS FROM PROBABILISTIC RISK ANALYSIS

A. Specific Studies

Several specific studies of plant safety have made and are making use of PRA information, many of them dealing with special licensing or regulatory issues. Most were initiated by the NRC, although some were industry initiated. A listing of some of the issues and special studies, many of which involve more than one study, follows.

- Risk-based categorization and resolution of NRC technical and generic issues
- Station blackout resolution
- Anticipated transient without scram resolution
- Pressurized thermal shock resolution for reactor vessels
- Evaluation of plant specific exemptions from limiting conditions for operation, technical specification changes, and surveillance requirements
- Selected topics in the systematic evaluation program
- Revisions to emergency planning and response
- New source term for reactor siting
- Licensing reviews of advanced reactors
- Aircraft hazards for nuclear power plants
- Risk-based inspections for nuclear power plant
- Operational data analysis and trending
- Risk-based revisions to the NRC Maintenance Rule
- Risk-based revisions to inservice inspections
- Risk-based revisions to quality assurance
- Risk-based revisions to technical specifications
- Risk-based revisions to fire prevention and mitigation requirements

B. Global Findings

The process of performing PRA studies yields extremely valuable engineering and safety insights. Conceptual insights are the most important benefits of PRAs and the most general of these is the entirely new way of thinking about reactor safety in a logic structure that greatly supplements the normal defense in depth design practices and regulatory processes. PRA methods introduce much needed realism into safety evaluations, in contrast to more traditional licensing analyses that take a conservative, qualitative approach that can mask important matters.

Based on the Individual Plant Examination program results, the estimated frequency of core melt is generally higher than had been estimated by the Reactor Safety Study. This is primarily due to the better data and thoroughness of these latter studies. However, most core melts are not expected to have large off-site consequences. The small fraction of accidents that might have large off-site consequences generally involve either an early failure of the containment in relation to the time of core melt or a containment bypass. For other containment failure modes, the retention properties of the containment are substantial.

The range of core damage frequency point estimates in the current library of PRAs covers about two orders of magnitude (approximately 10^{-6} to 10^{-4}/RY). The reasons for this variability include differences in plant design, operation, scope of the studies, PRA methods, and analytical and data assumptions.

The specifics of dominant accident sequences and the estimates of risk vary significantly from plant to plant, even though each plant meets all applicable NRC regulatory requirements. The following insights about off-site consequences have been identified.

1. Estimated risks of early fatalities and injuries are very sensitive to source term magnitudes and the timing of releases and emergency response.
2. For core-melt accidents, the estimated off-site economic losses are generally much smaller than the estimated on-site losses.
3. Estimates of early health effects and off-site property losses differ greatly from one site to another, but site-to-site differences are substantially less for latent cancers and on-site property damage.
4. Airborne pathways are much more important than liquid pathways.
5. Accidents beyond the design basis (including those initiated by earthquakes beyond the "safe shutdown" earthquake) are the principal contributors to public risk. This indicates that the designers, operators, and regulators have been generally effective in reducing the risks from expected operational occurrences and design-basis accidents.

PRA studies have provided a diverse assessment of the ways in which the elements of reactor safety contribute to risk as compared with traditional safety analysis. Among the principal insights are the following.

1. Human interactions are extremely important contributors to the safety and reliability of plants.
2. Test and maintenance considerations are important contributors to the safety and reliability of plants.
3. Dependent failures are important contributors to plant risk.
4. The failure of long-term decay heat removal is a major functional contributor to core-melt frequency.
5. Small LOCAs and transients are dominant contributors to core-melt frequency in most PRAs, whereas large LOCAs are usually not.

6. Earthquakes, internal fires, and floods seem to play an important role in plant risk, although this conclusion appears to be highly plant specific.

C. Pressurized- and Boiling-Water Reactors Dominant Contributors

Examining the results of the IPE program, the frequency of core damage, per reactor year, is lower for BWRs (range of 1×10^{-4} to 1×10^{-6}) than for PWRs (range of 4×10^{-4} to 3×10^{-6}). The calculated core damage frequencies result from many different sequences. There are no single sequence or failure that dominates the core damage frequency of a particular plant. Failures of support systems are important for most plants because such failures can result in failures of main safety systems. The primary contributors to core damage are transients and loss of all electric power. Transients initiating loss of coolant events were significant contributors for PWRs, but not so for BWRs due to a greater number of ways to inject cooling water into the core. On the other hand, transients with loss of containment heat removal were more problematic for BWRs than for PWRs. Internal flooding, anticipated transients without scram, and interfacing systems loss of coolant events were not significant contributors for either reactor type. For the PWRs, the rupture of the steam generator tubes was also not a significant contributor to core damage.

The IPE results also showed that, given core damage occurs, large PWR containments have lower probabilities of early failure than do BWR containments. However, containment bypass and containment isolation failures are a more significant problem than for BWRs. Late failures of both PWR and BWR containments have similar probabilities.

Although several nuclear plants have completed full Level 3 PRAs, the most recent information regarding the comparison of risk for several power plants is the NUREG-1150 studies. The results of these five plant evaluations show the estimated frequency for an individual early or latent fatality from a core melt due to internal initiators is less than one per 10,000,000 reactor years of operation.

D. Important System Dependencies

The results of the IPE and the NUREG-1150 studies show that a large contribution to core damage rests with the dependency on support systems, such as electric power and equipment cooling water. For example, PWR reactors have a vulnerability to loss of coolant from the reactor coolant pump seals should the cooling water to the seals fail. BWR containments are vulnerable to early failure due to failure of containment cooling equipment. Both reactor types demonstrate vulnerabilities due to loss of electric power, especially when loss of all AC power occurs at the site.

E. Systems Important for Safety

Although system designs and nomenclature vary among nuclear power plants, for the two general classes of reactors, the PWRs and the BWRs, the listing of systems important for safety appears to be fairly consistent, as follows.

PWRs

1. Auxiliary feedwater system
2. High-pressure injection system
3. Low-pressure recirculation system
4. Reactor coolant pump seal injection

BWRs

1. High-pressure injection system
2. Containment cooling system
3. Reactor core isolation cooling system
4. Reactor protection system

Finally, for both reactor types, human interactions play a major role, both beneficial and detrimental, in risk. For example, a large portion of the core-melt frequency for BWR reactors is the failure of the operators to recognize a loss of high pressure injection to the core and manually initiate depressurization of the reactor vessel to permit low pressure injection to function. However, operator intervention can also terminate an event before any major consequence results.

F. Application of Probabilistic Risk Analysis to Nuclear Power Regulation

Although PRA had been used in the regulation of nuclear power, these applications of PRA to the regulatory process were usually very specific in scope and limited in their application. In 1995, the NRC issued its Probabilistic Risk Assessment Policy Statement that formalized the NRC commitment to expand the use of PRA in the regulation of nuclear reactors. This began an aggressive, albeit incremental, transition to a risk-informed regulatory framework as a supplement to the existing, deterministic-based regulations.

VI. COMPARISON OF NUCLEAR RISKS WITH OTHER RISKS

In order to put the risk of nuclear power in context, it is necessary to compare it with risks the public experiences

TABLE V Death Rate Statistics for United States

Cause of death	Death rate[a]	Frequency
Motor vehicle accidents	15.2	1 in 6,580
Accidents at home	10.3	1 in 9,708
Accidents of general public	7.4	1 in 13,514
Accidents at work	1.1	1 in 90,910
Nuclear accident[b]	0.01	1 in 10,000,000

[a] Per 100,000 persons.
[b] Internal initiators, NUREG-1150.

from other sources. As indicated in this article, the major risk of nuclear power is due to accidents. The routine daily operation of a nuclear power plant does not expose the public to any measurable risk.

Based on 1997 accident statistics, the annual death rates for various activities are shown in Table V, which show the likelihood of dying from an accident at a nuclear power plant is much less than for normal everyday activities. Providing accident risks of nuclear power from the perspective of days of lost-life expectancy due to an activity is shown in Table VI. Again, there are many activities and sources of hazards that cause a loss of life expectancy greater than nuclear power plants.

Even though these statistics indicate that the risk of death from a nuclear power accident is substantially lower than the actual incidence of death from other accidents or cancer, the public perceives nuclear power to be one of the most dangerous industries. Some of the reasons for this perception of great risk, which have been discussed by experts for some time, are as follows. (1) Nuclear power represents an involuntary risk; (2) the benefits of nuclear power are difficult to accrue; (3) the potential for large catastrophic losses exists; (4) nuclear power is complex, mysterious, and generally unknown technology; (5) it is associated in the public mind with nuclear weapons and nuclear war; (6) it is a new technology; (7) the public does not trust the regulator or the plant owners; (8) nuclear power represents "big business"; (9) the media overemphasize its danger to the public; (10) its origins stem from weapons research; (11) the public fears are irrational; and (12) it is simply following the historical trend of other "new" technologies such as railroads, airplanes, gun powder, and electricity.

TABLE VI Loss of Life Expectancy for Various Activities

Cause of death	Loss of life in days
One pack cigarettes per day	2,250.0
Motor vehicle accidents	207.0
Homicide	93.0
Home-related accidents	74.0
Work-related accidents	60.0
Falls	28.0
Drowning	24.0
Fire, burns	20.0
Natural radiation (excluding radon)	9.3
Firearms	6.5
Medical radiation	6.2
Falling objects	6.0
Airline crash	1.0
Tornado	0.8
Hurricanes	0.3
Earthquake	0.15
Nuclear power	0.05

None of the above reasons has yet been validated, and therefore solutions are difficult to find. Massive advertising and educational programs have been developed to combat some or all of the common misconceptions, but the fact remains that the general public considers the risks of nuclear power to be larger than the technologist can mathematically calculate.

VII. CONCLUSION

Nuclear power is a major electricity producer in the United States (approximately 20%), with approximately 100 power units on line. The cost of these plants represents very large investments of approximately $2–4 billion dollars per plant for those most recently built. The regulation of these plants is also a large investment in government dollars and labor, since it is one of the most heavily regulated industries in the nation. However, nuclear power is also one of the safest industries in the United States, due mainly to a conscious effort by all involved (owners, designers, researchers, politicians, regulators, and the public) to ascertain that it remains safe. Historically, this safety consciousness has been in existence since the birth of the industry, because there has always been an understanding that the potential for harm is great and therefore extraordinary means are needed for protection.

The analysis of the risk associated with nuclear power plants is complex and requires many areas of expertise and a large database. Even more complex is the proper use of risk analysis and its uncertainty in decision making. Finally, the degree of public understanding of the risks from nuclear power plants as shown by many polls and interviews is an especially critical issue if nuclear power is to continue as a viable contributor to the U.S. energy supply.

Finally, it should be noted that only the risks associated with accidents at nuclear power plants are addressed in this article. There are, of course, other risks associated with the mining, milling enrichment, and fabrication of

nuclear fuel, as well as risks associated with the disposal of nuclear wastes. The mining-to-fabrication risks are typical of those associated with the mining and use of any ore, and with current technology and safety standards, they present risk to the workers, but not to the public. Waste disposal risks are currently being evaluated by several federal programs sponsored by the DOE and NRC. Current estimates are that no undue public risk is associated with the currently proposed nuclear waste disposal techniques.

SEE ALSO THE FOLLOWING ARTICLES

ENERGY RESOURCES AND RESERVES • ENVIRONMENTAL RADIOACTIVITY • FISSION REACTOR PHYSICS • HEALTH PHYSICS • ISOTOPES, SEPARATION AND APPLICATIONS • NUCLEAR FACILITIES EMERGENCY PLANNING • NUCLEAR POWER REACTORS • NUCLEAR REACTOR MATERIALS AND FUELS • NUCLEAR SAFEGUARDS • RADIATION SHIELDING AND PROTECTION • SPACE NUCLEAR POWER

BIBLIOGRAPHY

Aldrich, D. C., McGrath, P. E., and Rasmussen, N. C. (1978). "Examination of Off-site Radiological Emergency Protective Measures for Nuclear Reactor Accidents Involving Core Melt," NUREG/CR-1131. 131. SAND78-0454, Sandia National Laboratories, Albuquerque, New Mexico.

American Physical Society. (1975). "Report to the American Physical Society by the study group on light water reactor safety," *Rev. Mod. Phys.* **47,**

Ebert, K., and Ammon, R. V. (1989). "Safety of the Nuclear Fuel Cycle," VCH Publishers, New York.

Fischhoff, B., Lichtenstein, S., Slovic, P., Derby, S. L., and Keeney, R. L. (1981). "Acceptable Risk," Cambridge Univ. Press, New York.

Fleming, K. N., and Raabe, P. H. (1978). "A comparison of three methods for the quantitative analysis of common cause failures," Proc. *ANS Nucl. React. Saf Div. Probabilistic Analy. Nucl. React Saf* Am. Nucl. Soc., LaGrange Park, Illinois.

Fontana, M. H. (1983). "The Industry Degraded Core Rulemaking Program: IDCOR-an overview," Proc. *ANS Int. Meet. on Light Water Reactor Severe Accident Evaluation*, Cambridge, Massachusetts.

Rogovin, M., and Frampton, G., Jr. (1980). "Three Mile Island, A Report to the Commissioners and to the Public," U.S. Nuclear Regulatory Commission Special Inquiry Group, Washington, DC.

Kemeny, J. G., et al. (1979). "Report of the President's Commission on the Accident a Three Mile Island."

Cohen, B. L. (1991). "Catalog of risks extended and updated," *Health Phys.* **61**(3), 317–335.

McCormick, N. J., (1981). "Reliability and Risk Analysis, Methods and Nuclear Plant Applications," Academic Press, Inc., Orlando.

NUREG/CR-0400. (1978). Lewis, H. W., Budnitz, R. J., Kowts, H. J. C., Rowe, W. D., Von Hippel, F., Zachariasen, F., and Loewenstein, W. B., "Risk Assessment Review Group Report to the U.S. Nuclear Regulatory Commission."

NUREG/CR-1278. (1983). "Handbook of Human Reliability Analysis with Emphasis on Nuclear Power Plant Applications," Sandia National Laboratories, Albuquerque, New Mexico.

NUREG/CR-2300. (1983). "PRA Procedures Guide," American Nuclear Society and Institute of Electrical and Electronics Engineers.

NUREG-1050. (1984). "Probabilistic Risk Assessment (PRA) Reference Document, Final Report," U.S. Nuclear Regulatory Commission.

NUREG-75/014 (WASH-1400). (1975). "Reactor Safety Study-An Assessment of Accident Risks in U.S. Commercial Nuclear Power Plants," U.S. Nuclear Regulatory Commission.

NUREG-0492. (1981). Vesely, W. E., Goldberg, F. F., Roberts, N. H., and Haasi, D. F., "Fault Tree Handbook," U.S. Nuclear Regulatory Commission.

NUREG-1489. (1994). "A Review of NRC Staff Uses of Probabilistic Risk Assessment," U.S. Nuclear Regulatory Commission.

NUREG/CR-4780. (1987). "Procedures for Treating Common Cause Failures in Safety and Reliability Studies," U.S. Nuclear Regulatory Commission.

NUREG-1150. (1991). "Severe Accident Risks: An Asssessment for Five U.S. Nuclear Power Plants," U.S. Nuclear Regulatory Commission.

NUREG-1560. (1997). "Individual Plant Examination Program: Perspectives on Reactor Safety and Plant Performance," U.S. Nuclear Regulatory Commission.

"Policy statement on severe reactor accidents regarding future designs and existing plants," *Fed. Reg*. **50**(153), 32138.

"Safety goals for the operations of nuclear power plants; policy statement," *Fed. Reg*. **5**(149), 20844.

"Use of probabilistic risk assessment methods in nuclear regulatory activities; final policy statement," *Fed. Reg*. **60**(158), 42622.



Nuclear Facilities Emergency Planning

J. C. Courtney
Louisiana State University

I. Potential Emergencies
II. On-Site Response
III. Off-Site Response
IV. Planning

GLOSSARY

Contamination Radioactive or other potentially hazardous materials in places where they are undesired. Any process that is directed toward cleaning up or removal of these materials is called decontamination.

Core That part of a reactor that contains the nuclear fuel and most of the radioactivity. Safety systems are designed to reduce the probability of radioactive materials escaping from the core into the environment.

Criticality Condition under which energy is produced by self-sustaining nuclear fission reactions. Accidental criticality outside of the shielding and containment provided by a reactor could produce a burst of nuclear radiation and subsequent dispersal of radioactive materials.

Curie A measure of the radioactivity of a material. One Curie (Ci) is defined as 37,000,000,000 disintegrations per second of any radionuclide.

Dose Amount of energy from nuclear radiation absorbed per unit mass of any material. Radiation sources outside of the body as well as internally deposited radionuclides contribute to the dose to the whole body.

Dose commitment Estimate of the radiation dose to the whole body and to specific organs from radionuclides that are deposited in the body. These estimates are based on the amount and type of radionuclides inhaled or ingested and their behavior within the human body. The unit of dose commitment is the rem in any organ of interest.

Emergency response facility Designated area, usually on the nuclear facility site, where emergency managers and their advisory staffs gather. This area should be protected from any threat that might arise from any abnormal conditions in the facility.

Fissile materials Heavy elements, such as plutonium or uranium, enriched in the isotope 235 or 233 that can readily support a self-sustaining fission chain reaction.

Ingestion pathway exposure zone Area defined by a given distance from the facility within which resources must be allocated to measure radioactivity in samples of water and food. If levels that would lead to ingestion

dose commitments in excess of federal guidelines are detected, provision must be made to prevent those materials from entering the food chain.

Plume pathway exposure zone Area defined by a given distance from the nuclear facility within which provision must be made to notify the general public of the appropriate protective action to be taken. Resources must be committed for evacuation and temporary sheltering of residents of this zone.

Radionuclide The term that designates an unstable material that spontaneously changes into another material with the emission of energy.

EMERGENCY PLANNING for most nuclear facilities is required by law and is a prudent exercise. It forces management to consider what can go wrong and to allocate resources to cope with a variety of potential problems. Accidents may have both on-site and off-site consequences; mitigation of their effects requires working with federal, state, and local governments and soliciting the cooperation of many individuals with diverse backgrounds. Development of emergency plans requires a thorough knowledge of operations and the consequences of abnormal conditions that might occur along with the ability to work effectively with a variety of organizations. In the United States, a commercial nuclear power reactor may not operate above 5% of its full rated level until the federal government has approved both on-site and off-site emergency response plans. The lack of an approved, comprehensive, and tested emergency plan can have a serious financial impact on the operator of a nuclear facility.

I. POTENTIAL EMERGENCIES

A. Basic Concepts

Emergency planning must consider all the potential accidents that can occur within a nuclear facility and those phenomena that can adversely affect its safety or security. Table I lists abnormal conditions that must be considered when developing plans and allocating resources to mitigate their consequences. In addition to problems caused by upsets in the processes within the facility, plans must consider the effects of natural phenomena and threats posed by humans to the integrity of the plant and its personnel. Although radiological safety receives most of the attention in the developing and testing of plans, other accidents that do not involve nuclear radiation or the release of radioactive materials cannot be neglected. Recently, more emphasis has been placed on mitigating the effects of sabotage. Even though most acts of sabotage are unlikely to have serious radiological consequences, adverse publicity could damage the reputations of the operator of the facility and the governmental bodies charged with protecting the public.

TABLE I Types of Abnormal Conditions to Be Considered in Developing Emergency Plans

Release of radioactive materials from confinement
Abnormally high radiation levels
Accidental nuclear criticality
Fires
Explosions
Releases of toxic liquids, vapors, or gases
Displacement of air by inert gases
Personal injury or illness
Failure of structures
Dropping heavy objects
Abnormal conditions that can develop within the facility or during operations that threaten structural integrity or personnel
Earthquakes, floods, violent weather, and other natural phenomena that threaten structural integrity or personnel
Nearby transportation accidents that threaten structural integrity or personnel
Accidents at nearby facilities that could release harmful materials
Attacks on computer systems that destroy programs or data
Security alerts
Bomb threats and other forms of sabotage
National emergencies

As applications of computers to operational control of processes has increased, the vulnerability to attack from cyberspace has attracted more attention. Computer viruses capable of invading programs can modify or destroy data to initiate abnormal conditions or to interfere with recovery operations. As the sophistication of potential adversaries increases and the cost of computer equipment decreases, nuclear facilities become more vulnerable to attack. Critical infrastructures must be protected from attack originating within the facility or from external connections, such as the Internet.

All licensed nuclear facilities that contain significant quantities of radioactivity are required to maintain substantial barriers to the release of these materials. Emergency planning assumes that these barriers will be lost and provides for the mitigation of the consequences of any release. Both on-site and off-site actions may be required to protect the plant, its personnel, the public, and the environment. The best approach is accident prevention, but it is prudent to assume that mishaps will occur and to allocate resources to deal with the resulting problems in the appropriate fashion. Studies of the potential consequences of hypothetical events are an important factor in developing emergency plans. Attention must be given to recovering from the accident and restoring the

facility to normal operation in a timely and cost-effective manner.

The quantity and rate of release of radioactive or other hazardous materials depend on the physical form of the substance and the amount of energy available to breach the barriers and to force it into the environment. Gases and vapors are more likely to be dispersed than liquids and solids. Heat produced in the facility by the accident causes the expansion of gases and vapors and forces them into the environment. Fine particles may be suspended in atmospheres that escape the compromised barriers. The goals of safety systems are to shut down processes and to reduce the probability of the escape of potentially hazardous quantities of materials. These actions may require heat removal and pressure reduction in certain areas, and reduction of the amount of airborne materials by filtration or other mechanisms. Specifics of barriers and safety systems are determined by the type and function of the specific nuclear facility of interest. Barriers to the release of radioactive materials and generic safety features of a nuclear power plant are shown in Fig. 1.

Emergency plans should reflect realistic assumptions of the amount and rates of release of materials. Experience in these areas has been gained by research and extensive analysis of the phenomenology and consequences of abnormal events. In addition to engineered safety systems, naturally occurring processes, such as gravity and solubility of vapors and solids in liquids, strongly influence the consequences of any given accident scenario. In most cases, abnormal conditions favorable to the release

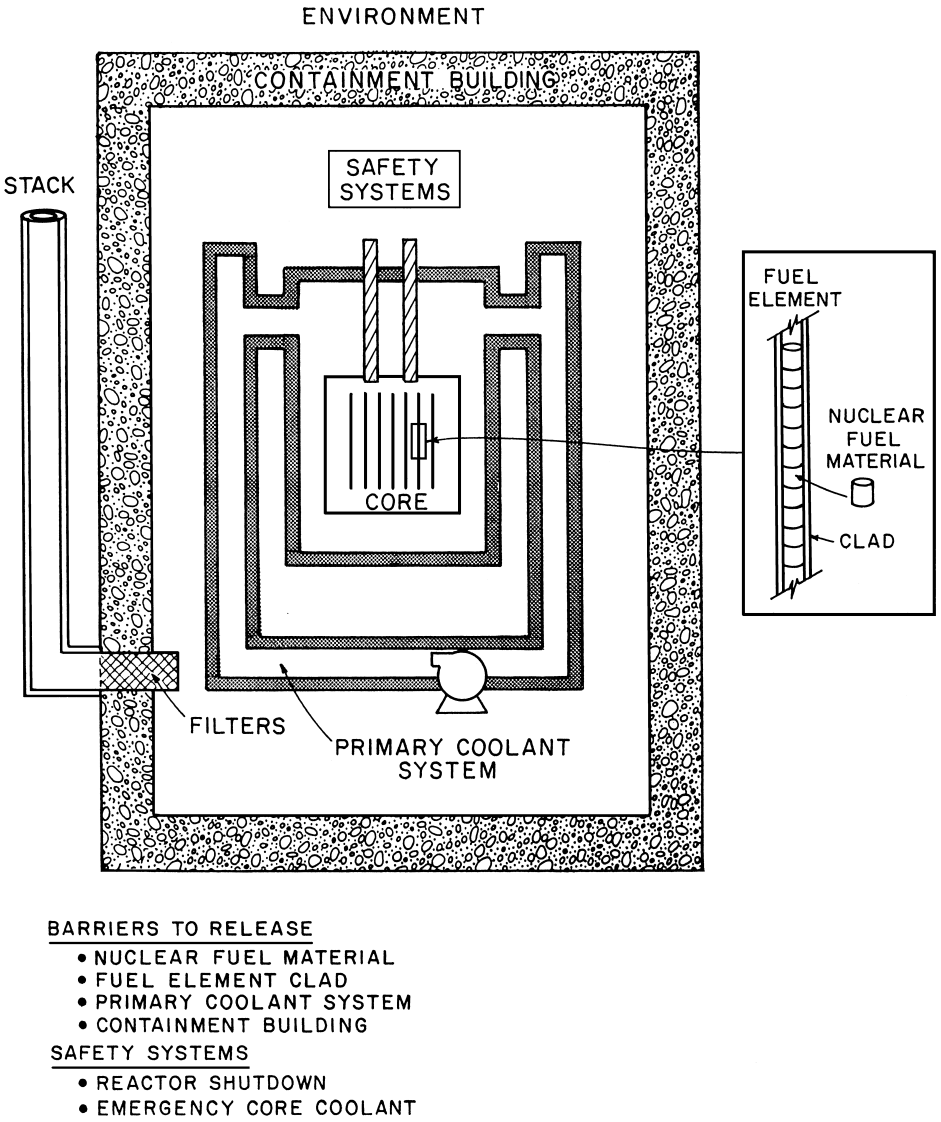

FIGURE 1 Generic safety systems and barriers to the release of radioactive materials in a power reactor.

of radioactive materials develop much more slowly than accidents in nonnuclear facilities, such as chemical plants. This gives the emergency response personnel more time to consider and implement their actions. In-plant activities may be very effective in reducing or preventing the escape of radioactivity into the environment. Actions that are effective in minimizing the dispersal of contamination greatly reduce the cost of mitigating consequences and contribute to restoring the facility to normal operation.

Emergency exercises that test the response to a simulated accident usually make unrealistically severe assumptions of the consequences of any abnormal event. If this worst-case scenario can be handled in the appropriate fashion, it is reasonable to assume that the requirements of less severe situations can be met. However, if the assumptions are too unrealistic, resources can be wasted by emphasizing situations that are impossible while more likely scenarios may not be addressed in emergency plans.

B. Characteristics of Nuclear Facilities

Commercial nuclear power plants contain very large inventories of radioactive materials and the potential for releasing a large amount of energy that could violate barriers and force materials into the environment. Safety systems and barriers, such as those shown in Fig. 1, are designed to minimize the amount of activity available for release and to remove energy from the primary coolant system and the containment building. All of the power reactors in the United States are designed to shut down the fission process and thus reduce the rate of production of radioactivity and energy under any conceivable accident conditions. Reliance is placed on the passive natural phenomena in the design of the core as well as on systems that require action on the part of the reactor operators. Systems are provided to remove the heat generated by the decay of radioactive materials and the energy stored in the primary coolant. Heat removal from the containment building reduces the pressure that can force gases, vapors, and entrained particles into the environment. Sprays and filters are used to reduce the quantity of airborne radionuclides. Controlled releases can be directed through filters to remove most particulates and chemically active vapors. Materials, such as the noble gases krypton and xenon, that pass through the filters are forced up a stack; monitoring equipment provides quantitative information on release rates of radioactive materials that pass through the filters. A major concern is that severe events could compromise containment and lead to unmonitored releases; such events have extremely low probabilities of happening because of the conservative design and structural integrity of the containment building.

The cores of low-power research reactors contain much less radioactivity than those of electrical generating plants. So, the associated safety systems are far less elaborate and less expensive. Emergency plans for research reactors and other nuclear facilities must consider the possibility of achieving criticality at a time or location where it is not desired. Such accidents are more likely if high concentrations of fissile material are handled. As the content of fissile nuclides increases, controls on the masses of nuclear fuel that can be present at any location at any given time become more stringent. If too much fissile material is brought together in one place at one time, an accidental criticality can result. This accident produces an intense burst of radiation and heat that could rupture barriers and disperse radioactive materials. Although the emphasis is on the prevention of nuclear criticality by training and the enforcement of strict rules for handling fissile materials, provisions must be made to evacuate personnel from the immediate area and to minimize the spread of contamination. Such out-of-core critically accidents are not credible at commercial power reactors because of the very low concentration of fissile material in the fuel.

Facilities that handle only fresh, unirradiated fuel contain only small inventories of radioactive material. Prevention of accidental criticality is a major item in planning operations. Flow rates and volumes of containers of solutions containing high concentrations of fissile material must be closely controlled and monitored. Attention must be given to chemical reactions that could concentrate excessive masses of fissile materials in any part of the process equipment. Keeping track of the movement of masses of fissile material throughout each step of the process is important; each transfer must be recorded and periodic checks of the mass balances are performed by auditors. Usually, solid fissile materials are easier to track than solutions. If fine powders are handled, steps must be taken to minimize dispersion within process equipment and to keep them out of respirable atmospheres. Comprehensive emergency planning demands attention to nonradiological hazards, such as those associated with the use of flammable or toxic chemicals required by the various process steps.

Reprocessing or examination installations that handle spent nuclear fuel must provide both containment of radioactive materials and shielding against the radiations they emit. Loss of containment or shielding might result from accidental criticality or a fire or explosion of processing chemicals. Because accidental criticality in spent fuel is less likely than in fresh fuel, these facilities have fewer barriers and safety systems than those found in power reactors. Most of the shorter lived radionuclides have decayed away by the time fuel is removed from the core of

the reactor and transported to examination or reprocessing facilities.

Waste storage installations may contain large inventories of radioactive materials, but usually they are in the form of solids. Passive techniques remove the heat that is generated by radioactive decay, and there are no operations that involve flammable or toxic materials. The emphasis is to maintain the integrity of confinement barriers around the radioactive materials over extended periods of time. A major goal is to prevent the contamination of groundwater or surface water supplies.

Organizations not associated with the nuclear power fuel cycle may also need emergency plans to protect employees and the general public. Radioisotopes are extensively used in industry to measure fluid levels and material thickness and to obtain images. Depending on the activity, the application, and the potential consequences of any credible accident, the emergency plan can be a single page or an elaborate document. Medical installations use small quantities of radioactive materials in the form of liquids or gases for diagnostic tests. Larger radiation sources, such as solid forms of radionuclides and radiation-producing machines, are used for cancer therapy. Because of the low probability of accidents that could affect the public, emergency plans emphasize the protection of employees, patients, and visitors. Procedures for contamination control to minimize recovery time and costs are also an important consideration for medical facilities.

Transportation of high levels of radioactivity presents special problems because of the proximity of the general public, the probability of vehicle accidents, and the lack of barriers and safety systems compared to fixed nuclear facilities. Proper packaging of radioactive materials is the most important factor in maintaining shielding and preventing the spread of contamination. Prototype designs of containers are tested by the simulation of severe accident conditions. Both mechanical shock and thermal tests are used to assure the integrity of shipping containers. In case of an accident, emergency operations will be carried out under intense media and public scrutiny. Because accidents are likely to occur in public areas, such as highways, response plans must involve a number of organizations including law enforcement officers and state and local governments. Procedures to provide timely and accurate information to the general public through the media and local officials are especially important in transportation incidents.

C. Consequence Assessment

Radiological consequence assessments predict the potential radiation exposures of individuals in or around the facility under hypothetical abnormal conditions. These predictions are the basis for developing emergency plans for nuclear facilities. Specific plans for any installation are based on the probability and degree of radiation exposures to on-site and off-site personnel. It is assumed that abnormal events result from accidents, assessments also can be generated for deliberate actions, such as those by terrorists, that have the objective of releasing radioactive or other potentially hazardous materials from areas where they can be handled safely.

Each hypothetical scenario assumes an inventory of radioactive materials, usually expressed in Curies (Ci), being present in a nuclear facility or in a container during transport. Under normal conditions, the inventory is confined by a series of barriers to a volume where it can be used or transported safely. These barriers also attenuate the penetrating radiation emitted by the radionuclides to obtain acceptable dose rates in normally occupied areas. A series of accidental or deliberately initiated events that transfer energy to the barriers can compromise them and force all or a part of the inventory into the environment, where it can impart unacceptable dose equivalents to individuals. In most abnormal events, only a fraction of the inventory is subject to increased thermal or mechanical stresses; this fraction is called the material at risk (MAR) and is expressed in Ci.

All of the events are initiated by depositing energy in the radioactive materials and their confining barriers; energy can be generated by nuclear, chemical, or mechanical reactions. The only highly energetic nuclear reaction of concern is an accidental criticality. In this event, the fission reaction is sustained for a short period of time; natural processes of heating and expansion limit the amount of energy released. It is caused by accumulating too much nuclear fuel, such as enriched uranium or plutonium, in one place at a given time. In addition to producing a pulse of penetrating radiation (neutrons and gamma rays), much of the energy produces heat within the nuclear fuel causing the release of fission product gases, vapors, and fine particles. Strict control of the masses of nuclear fuels within facilities and in transportation packages give this high consequence event a very low probability.

Of all of the chemical reactions, the most important is rapid combustion or fire. Some of the actinide elements such as uranium (U), plutonium (Pu), or americium (Am) metals rapidly oxidize in the presence of air; if they are in the form of powders or chips, they can spontaneously ignite and burn rapidly. Care is taken to handle these elements in inert atmospheres and to store and ship them in air-tight containers. Other exothermic reactions caused by mixing chemical forms of radioactive materials are much less likely, but there are potentials for fires or explosions in nonradioactive materials used in certain processes. If combustible materials are present, any radioactive

material could be involved in fires. If barriers are compromised, the energy released heats and expands atmospheres containing radioactive gases and vapors forcing them out of the initial confined volume. Fine particles could be entrained in the expanding atmosphere and carried along with gases and vapors. Chemically active vapors, like iodine and cesium, tend to deposit on surfaces of airborne particles, so they are usually considered to behave as particles rather than as gases. Fire-resistant barriers are generally effective in retaining most, if not all, radioactive materials subject to external heating. Encapsulated solid sources, such as those used by industrial radiographers, are designed to withstand intense fires for extended periods of time.

Transfer of mechanical energy is usually less efficient in dispersing materials than are fires; the greatest concern is the potential for damaging confinement barriers by impact. Dropping containers (or masses of the radioactive materials themselves) and collisions during transport are the most likely accidents. Nuclear facilities are designed to survive environmental phenomena, such as earthquakes, high winds, and floods, with most of the barriers intact. Missiles and explosive charges could be used to compromise barriers, but these are inefficient means of dispersion of materials. Massive forms of solid radioactive material can be broken into smaller pieces by mechanical shock, but it is difficult to form fine particles that could be entrained in air currents. Radionuclides that escape confinement can be dispersed by wind, surface water flows, and human activities.

The amount of energy transferred to the barriers is usually insufficient to eliminate all resistance to release to the environment; partially intact barriers can be effective in containing the MAR. Generally, only materials that become and remain airborne can escape through partially intact barriers. That fraction of the MAR that becomes airborne in the accident is called the airborne release fraction (ARF). Even though the ARF is a function of time and the rate at which energy is imparted to the radioactive materials, it is standard practice to assign an integrated bounding value to this parameter in any given scenario. The strongest influences on the value of the ARF are the physical form of the radioactive element and the type and amount of energy transferred to it. This unitless parameter ranges between zero and unity; extensive analyses and empirical data have been generated for gaseous, liquid, and solid radioactive materials subjected to thermal and mechanical stresses. Table II lists the various physical forms of radionuclides with examples and qualitative ARF values.

Selection of an appropriate value of the ARF is extremely important in projecting radiological consequences of abnormal events. Faced with a lack of knowledge of what will occur, the tendency is to select high values. Unrealistically high values (approaching unity) lead to the prediction of unduly severe consequences and cause unwarranted concern. Uninformed media reports can amplify concern into unreasonable fear that leads to pressure from the public and politicians to waste emergency resources for minor events.

TABLE II Physical Forms of Radioactive Materials

Physical state	Example	Comment
Inert gases	Kr and Xe	Highest ARFs that approach 1.0
Reactive gases	UF_6	Ambient conditions determine ARF
Liquids	^3H as HTO	Vapor pressure determines the ARF
Volatile solids	I and Cs	Temperatures determine ARF of vapors
Semivolatiles	Te and Cd	Lower ARF values than I and Cs
Refractory solids	Co, Sr, and UO_2	Low ARF values that approach zero
Fine particles	Pu and Am	Must be entrained in moving fluids
Massive solids	Reactor fuel	Essentially zero ARF
Encapsulated	Any nuclide	Zero ARF unless penetration occurs

Even though particles released in accidents are usually not of uniform shape or dimension, it is usually assumed that they can be described by a single parameter, the diameter of a sphere that is representative of the size distribution. To enter the pulmonary region of the human respiratory system, particles must have diameters of 10 μm or less; these are called "respirable particles." For efficient transport from the original location to any receptor at a distance, the MAR must become and remain airborne. Larger particles are less likely to remain aloft as they move from the point of release to the receptor. Of the materials that escape into the environment, only the respirable fraction (RF) is assumed to reach the receptor to deliver radiation doses. As the amount of energy imparted to the MAR increases, the RF increases. Like the ARF, the RF has no units and ranges between zero and unity.

Chemically reactive materials, such as iodine, cesium, and uranium hexafluoride (UF_6), tend to form compounds or become absorbed on the surfaces of airborne particles or water droplets. As time passes, finer particles tend to agglomerate or form larger particles by chemical, mechanical, and electrostatic reactions. As the particle size increases, they tend to be removed more rapidly from the atmosphere by gravitational settling. Chemical reactions and impaction with surfaces further reduce the amount of airborne activity. In addition to these passive effects,

active systems, such as filtered exhaust trains and building sprays, serve to decrease significantly the amount of airborne materials. Partially intact barriers delay the escape of airborne activity and increase the effectiveness of passive phenomena and active systems. The fraction of the respirable airborne radioactive materials that escapes a facility or a shipping container into the environment is given by the leak path fraction (LPF). If multiple routes for escape are present in a given situation, the LPF values for each path are added.

In any scenario, only a fraction of the total inventory can escape confinement. For a single leak path, the activity released, Q, can be found from the MAR by the equation

$$Q(\text{Ci}) = \text{MAR(Ci)} * \text{ARF} * \text{RF} * \text{LPF}.$$

After release from a facility or shipping container, radioactive materials are carried through the atmosphere by the wind toward hypothetical receptors. Transport and dilution in the atmosphere is based on a mathematical model that treats the release as a plume of effluent that slowly moves downwind and diffuses in the vertical and horizontal dimensions perpendicular to the wind direction. Thus, the radionuclides occupy a volume that increases as they move toward the receptor. As the distance from the release point increases, the concentration, X in Ci/m^3, decreases because the effluent occupies a larger volume.

The behavior of released gases, vapors, and fine particles in the environment is extremely complex and is strongly influenced by prevailing meteorological conditions. However, highly conservative assumptions allow the estimation of concentrations of radionuclides based on simplified formulas that consider the wind speed, atmospheric stability, elevation of the release, and downwind distance to the receptor. Neglect of removal processes, such as gravitational fallout and scavaging by precipitation, and assumptions of nearly constant wind velocities combined with very stable conditions are used to assure that concentrations are conservatively estimated (i.e., calculated to be higher than expected) at the receptors of interest. Relatively small changes in assumptions can make orders of magnitude of difference in projected concentrations and the resulting radiation dose equivalents, especially for receptors within a few kilometers of the release point.

If the radionuclides reach receptors as gases, vapors, liquids, or fine particles, they could enter the body and cause radiation exposure until they are eliminated by natural processes or radioactive decay. The resulting exposures are termed a committed effective dose equivalent (CEDE) because the dose equivalent rate continues for a period of time after the intake. As the materials are eliminated from the body, their dose equivalent rates decrease. By convention, the rates are integrated over the 50-year period immediately following the intake. The CEDE is measured in units of rem. Conversion factors in units of rem per μCi inhaled or ingested are available for all the radionuclides likely to reach receptors.

Multiplication of the airborne concentration, X(Ci/m^3), the breathing rate, B(m^3/s), and the inhalation time, t_B(s) gives the activity inhaled by the receptor, A(Ci). Respiratory protection devices, such as full face masks with filters or a self-contained breathing apparatus, can eliminate or significantly reduce A(Ci). Devices are assigned a unitless protection factor, PF, that is defined as the ratio of the concentration in the ambient atmosphere to the concentration inside of the mask. Emergency responders use equipment that have PF values between 2 and 10,000. Inhaled activity, $A(\mu\text{Ci})$, can be found from

$$A(\mu\text{Ci}) = X(\text{Ci/m}^3) * B(\text{m}^3/\text{s}) * t_B(\text{s}) * 10^6/\text{PF}.$$

Although inhalation is the primary concern for emergency responders, there are three other pathways through which materials can enter the body. All of the modes of intake are shown in Table III. Estimating ingestion, infiltration, and injection intakes are difficult. Fortunately, the probabilities of the latter two paths are very low, and ingestion can be controlled by restricting eating, drinking, and the use of tobacco products in contaminated areas.

In most situations, contamination is in the form of fine particles that may or may not be visible to the unassisted eye. For emergency responders, the palms of the hands and the bottoms of the shoes are the four surfaces most likely to become contaminated. Protective clothing, such as gloves, shoe covers, and coveralls, along with frequent measurements of clothing surfaces with portable radiation survey instruments, are highly effective in minimizing the spread of contaminants and the probability of their ingestion.

Even if radioactive materials do not enter the body, emergency plans must consider the effects of radiation given off by them. Of the most concern is the penetrating radiation that can impart a deep dose equivalent (DDE) to organs and tissues within the body. In practical situations, the dose rate from these external sources varies with time because the distances between sources and bodies do not remain constant. Conservative assumptions are used

TABLE III Methods of Intake of Materials into the Body

Pathway	Comment
Inhalation	Most important path; controlled by respiratory protection
Ingestion	Controlled by restricting activities and protective clothing
Skin infiltration	Only important for tritium and soluble iodine compounds
Injection	Unlikely except through open wounds

to develop conversion factors that allow rapid estimations of DDE for receptors positioned above large uniformly contaminated areas or submerged in air or water containing uniform mixtures of nuclides. Operations to rescue personnel, mitigate the immediate consequences of the event, and to minimize or prevent long-term effects on the public and the environment usually place emergency workers in close proximity to sources of penetrating radiation. Because placement of shields between them and the sources may be impractical, they may work in areas of relatively high DDE rate.

For some radioactive materials, shallow dose equivalent (SDE) rates are of interest. The SDE, measured in rem, was formerly termed the skin dose. For nuclides that emit low energy photons and charged particles, the SDE is much greater than the DDE. As with the DDE, tabulated factors that conservatively predict the SDE are available. Clothing and personal protective gear worn by emergency responders are effective in reducing the SDE rates. Risks associated with the SDE are much lower than the risks from comparable values of the DDE.

The sum of the DDE from sources that remain outside of the body and the CEDE from nuclides deposited in the body equals the total effective dose equivalent (TEDE). The SDE does not contribute to the TEDE. Protective gear, such as respiratory protection, can lower or eliminate the probability of CEDE. If no contamination is present, only direct radiation from the sources contributes to the TEDE, so respiratory protection is not advisable unless chemically toxic materials or oxygen deficient atmospheres are involved in the incident. Because respiratory protection reduces worker efficiency, its use can significantly increase the time required to complete tasks, and thus increase the DDE received.

Computer programs containing compendia of data are available to aid in projecting the radiological consequences of abnormal events. Developing a familiarity with these computer programs serves emergency planners well, but there is no substitute for a critical review of the accident scenarios to make the assumptions for release and transport parameters as realistic as possible. Many planners prefer to use personal computer spreadsheets instead of programs developed by other organizations. This gives the individual control over every step required to estimate TEDE values and reduces the arbitrary restrictions imposed by the programs. Users are forced to critically evaluate all of the formulas and input parameters in the calculations to assure that they are appropriate for the hypothetical situation. Thus, estimates can be readily defended if questioned by regulatory agencies or other reviewers. Spreadsheets can be easily modified to accommodate changing situations and to study the impact of alternate assumptions.

Projected TEDE values for the same hypothetical incident can vary widely from study to study because the calculations reflect the engineering judgment of the planners. A degree of conservatism is prudent, especially if the uncertainties about the scenario parameters are high. Time invested in studying the physical characteristics of the MAR, the sequence of events, and the mechanisms required to disperse the potentially hazardous materials should increase the accuracy of the predicted consequences of abnormal situations. Generally, as the degree of accuracy increases, the projected TEDEs decrease, sometimes by several orders of magnitude. It is good to keep in mind that projections apply to hypothetical situations, so calculations cannot be proven to be right or wrong. In spite of this disincentive, planners should review actual events and empirical data that become available so that their estimates of the radiological consequences are based on reality, rather than highly conservative worst-case assumptions. Overly conservative estimates can lead to excessive costs for protective measures or emergency response and unreasonable public concern, even panic, when accidents do occur. To avoid misinterpretation of the predicted consequences, planners should assure that the assumptions that define the hypothetical scenario are clearly described.

II. ON-SITE RESPONSE

A. Objectives

In most situations, the sooner that an appropriate response to an incident is initiated, the less likely it is that severe consequences will result. For that reason, it is important to develop realistic plans that consider the characteristics of the facility and provide the resources to cope with credible accidents. Plans provide the framework for the mitigating actions designed to protect personnel and minimize plant damage and recovery costs. General objectives and specific procedures are outlined and authority and responsibility are assigned to individuals and organizations. Channels of communication and liaison are established among groups remaining on site and organizations involved in emergency operations from off-site locations.

A single individual is designated as the emergency manager to be in charge of the response. Support is provided by a staff of experienced people who have received training in emergency actions and who have participated in drills. If the emergency conditions extend over a long period of time, alternates are available to provide relief.

For major facilities, an entire group may be committed to the development of emergency plans and specific procedures. These individuals continually update the emergency plan and serve as advisors to the emergency managers

TABLE IV Requirements for Emergency Plans

Definitive descriptions of the sites, areas, buildings, rooms, and equipment covered by the plan
Concise statements of the responsibilities and authorities of the emergency manager and his or her staff
Relationships among normal line management, the emergency manager, and other entities such as local, state, and federal governments and the press
Descriptions of emergency signals, their significance, their location, and appropriate responses
Provisions for reliable communications including portable units
Brief descriptions of the types of emergencies appropriate to the facilities involved
Inventories of emergency equipment and its locations
Methods of accounting for personnel to ensure that no injured or trapped persons are abandoned
Procedures for reentry of the facility for search, rescue, and restoration of services
Training requirements, including provisions for drills and post-drill critiques
Actions needed to maintain security on all sensitive materials, equipment, or information
Provisions for dissemination of information to employees and the general public

during drills or actual incidents. In addition to the appropriate technical specialists, persons trained in communicating information to the public are part of this staff. This group is usually involved in training personnel in emergency procedures and in interacting with off-site entities, such as state and local governments.

An outline of the requirements for emergency plans for a reasonably complex facility handling nontrivial quantities of radioactive materials is presented in Table IV. The specific content and details of a given plan are influenced by the characteristics of the specific facility. It is imperative that emergency plans and procedures be tested periodically and revised to meet changing situations. Success in coping with incidents depends on people knowing what to do and how to do it and having the necessary capabilities. All this represents a significant commitment of resources by management to emergency planning.

Usually, the first step in responding to an accident or other serious upset of normal operating conditions is the removal of nonessential personnel from the area. This simplifies the action of the emergency manager if he or she can be assured that people are out of harm's way shortly after the appropriate alarm is sounded. Thus, all plant personnel must receive at least a minimum of training on the nature and degree of potential hazards within the facility and what actions are required by various alarms.

Concurrent with the evacuation of the affected areas, the manager determines the conditions within the plant. This may involve the review of key facility parameters displayed in a control room or in another safe location. If this information is not available electronically, a team might be directed to reenter the facility wearing appropriate protective equipment. This team's report should describe the situation and assess the types and degrees of hazards, so that the emergency manager has a basis for further action. In some cases, the initial reentry team may be able to mitigate the hazard by extinguishing fires, restoring electrical power, or manipulating process or facility controls. Subsequently, teams can be dispatched to take actions that return the facility to normal operation.

B. Emergency Response Facility

The emergency response facility (ERF) in a nuclear installation is the location where designated individuals gather to analyze data and make decisions. Depending on the type of operations conducted, the ERF may be in or near the process control room or at some distance from the plant. Wherever it is located, it must be protected from hazards associated with possible accidents. Adequate radiation shielding must be provided, and the ventilation system must furnish protection against intake of radioactive or toxic gases or vapors. Access to the ERF is strictly controlled to exclude unauthorized personnel who could hamper operations.

Some ERFs are designed such that the process can be controlled from there; others merely provide indications of key plant parameters. All of them should have enough reference information sources to give the emergency manager and his or her staff adequate support. For some facilities, it is particularly useful to have real-time in-plant radiation monitor data displayed in the ERF. Most nuclear facilities are designed such that materials enter the atmosphere through a path that includes radiation monitoring systems; so the measured rates of release should be available to the ERF. This information, when coupled with meteorological data, allows the projection of radiation doses and dose commitments from intake of radionuclides. Such projections have a strong impact on both on-site and off-site actions.

Space may be provided for personnel from other organizations, such as the Nuclear Regulatory Commission

(NRC) and state and local emergency preparedness agencies. Communication links with on-site and off-site locations are vital to keep the necessary information flowing. Adequate telephone lines and radio facilities must be provided in the ERF to minimize interference with and delay of emergency operations. If the ERF is not large enough to accommodate the necessary resources or personnel, auxiliary locations may be established. Backup ERFs may be required for nuclear power stations if the primary installation is very close to the reactor. When this is the case, establishing clear paths of communication between both ERFs is a very high priority.

During drills and practice sessions, evaluators may be present to observe and critique the emergency staff. The layout of the facility is such that the important data are clearly displayed to the staff. Each individual should be provided with adequate room and communications to function effectively. Some ERFs have adjacent rooms that contain more communications gear and reference information or that are used for interactions between representatives of the various participating organizations.

C. Special Considerations

Any major incident in a nuclear facility can tax the resources of the operator. Usually, mutual assistance agreements are made with other organizations to provide technical support. If radioactive materials are released, extensive measurements of the activity deposited on the ground and in foodstuffs are required. Such efforts require assistance from laboratories with the capabilities to measure and identify low levels of radioactivity. If significant radiation levels are present around the facility in which the accident took place, they may preclude measurements within that facility and force the use of laboratories in other locations. Some laboratory procedures are very time consuming; there may be delays of several days between collection of samples and notification of results.

For some facilities that handle fissile material or classified hardware or documents, security requirements may conflict with safety considerations. Evacuation of a building or a site can compromise security by increasing the potential for theft, loss, damage, or unauthorized use of sensitive material. Security barriers, such as fences, gates, and radiation monitors, delay the egress of personnel. A rapid exit from a secure area can provide opportunities for bypassing security checks and removing classified materials. Emergency plans should be coordinated with those individuals who are responsible for safeguarding sensitive items; additional rings of security can be established in safe areas. The use of company rather than privately owned vehicles in evacuation procedures should be considered if security is a problem. The reception area for plant evacuees should be such that public access can be controlled.

One way to meet security and safety requirements is to design a safe haven within a building where sensitive items are handled. This is an area that is well shielded and protected from fire and airborne radioactivity or toxic materials. If an alarm is sounded, workers immediately gather in the safe haven. Communications are established with the emergency manager and a security representative. The workers remain in this sheltered area or leave for another area as directed by the emergency manager. This delay allows time for appropriate security measures to be established without placing the workers at risk.

III. OFF-SITE RESPONSE

A. Requirements

Planning for the off-site response to incidents is complicated by the requirements to become involved with state, local, and even federal government emergency response organizations. Not only are more people involved, but emergency planners must cope with a wide range of interests, competence, and opinions about nuclear installations. At times, there may be strong differences of opinions on the actions to be taken among the individuals involved, but they must all work together. This presents a great challenge to elicit the cooperation required to produce and implement a viable emergency plan. Indeed, such plans can become highly political issues that require developing and maintaining personal relationships with a diverse collection of individuals to ensure their continuing support.

In some instances, the off-site emergency planning requirements have proved useful to those who do not want a nuclear facility to begin or to continue operation. Elected officials have responded to pressure from antinuclear groups and withheld state and local cooperation in developing and testing emergency plans. As cooperation between on-site and off-site organizations is needed, this tactic is effective in preventing the operation of a facility. It is very difficult to overcome this type of opposition, but some success has been achieved using public relations programs to reach out to concerned citizens. Typical efforts include the use of a speakers' bureau, with employees trained to address the valid concerns and misinformation about the specific plant. Contacts with the media, elected officials, and other influential citizens are important.

Federal regulations call for every nuclear power plant, and almost all other major nuclear installations, to develop an emergency plan and to test it periodically. This is a condition for initial and continued operation. Reviews are conducted by the appropriate federal agencies; for civilian

power plants, one or more states can also be involved. Coordination with all entities that would be involved in an actual emergency, such as law enforcement and environmental protection agencies, is vital to developing a successful plan. Drills are an important means of developing effective relationships among the diverse groups involved in the off-site phase of emergency response. Not only do they provide practice for the individuals, but they give each participant a better understanding of the other person's problems.

Emergency plans for commercial power reactors have proved useful in nonnuclear situations. The specific steps required to conduct evacuations have been used in at least two instances. A leak of toxic fumes from a chemical plant in December 1982 forced the evacuation of 17,000 residents of St. Charles Parish, Louisiana. The draft plan devised for Louisiana Power and Light's Waterford-3 unit was used; at the time, this nuclear plant was still under construction. A fire in a sewage treatment plant in Cedar Rapids, Iowa, in July 1985 caused the evacuation of 10,000 people. Officials implemented part of the plan written for the Duane Arnold nuclear power station operated by Iowa Electric Light and Power company.

Unlike on-site response, directions to the general public to take action are issued by an elected official. Depending on the prevailing laws, this might be the governor of the state or a local authority. This official would receive advice from the operator of the facility, the NRC, the Federal Emergency Management Agency (FEMA), and state agencies as to the appropriate action to be taken.

The NRC is responsible for overseeing on-site emergency plans and technical procedures for both on-site and off-site activities. Nontechnical activities, such as communications, transportation, and sheltering of evacuees, are under the purview of FEMA. Other federal agencies, such as the Department of Agriculture, the Department of Energy, the Environmental Protection Agency, and the Department of Health and Human Services, may be called upon to render assistance in their areas of specialty.

B. Operations

The NRC has developed an accident classification scheme that defines four levels of emergency that are described in Table V; these categories have been adopted by nuclear facilities operated for the Department of Energy. The utility or other licensee first determines the appropriate class of the incident. Each level involves some notification and information requirements as well as varying degrees of activation of emergency response personnel. If the seriousness of the situation increases, there could be a progression from the notification of an unusual event to the general emergency. For some incidents, it might be appropriate to go directly to the site area emergency or even the general emergency level. It is even possible that a situation that extends over a protracted period could go up and down through these classes several times.

If a general emergency is declared, the public is alerted to take the appropriate action. Usually, sirens around the plant are sounded. Upon hearing the sirens, the public tunes radios to the Emergency Broadcast Station (EBS). Specific directions and recommendations for protective actions are issued by the appropriate authorities. In some areas, the licensee has installed tone alert radios in homes

TABLE V Emergency Classes and Responses

Class	Situation	Response
Notification of an unusual event	Normally does not constitute an emergency in itself but indicates a potential reduction in safety of a facility. No radioactive or toxic material is released.	Only on-site response is warranted. Off-site organizations may be informed, but no response is required.
Alert	There is the actual or potential for significant reduction in facility safety. Minor amounts of radioactive or toxic materials may be released. Off-site concentrations are expected to be within applicable permissible limits.	Only on-site emergency response personnel are activated. Off-site personnel are advised to be ready for activation if the situation becomes more serious.
Site area emergency	There has been an actual or probable failure of plant safety systems. Releases are within federal guidelines for radionuclides. For other toxic materials, the releases have the potential of exceeding federal guidelines.	Emergency centers are activates, and personnel required to determine on-site protective measures are sent to their duty stations. Appropriate on-site and off-site monitoring teams are dispatched.
General emergency	Failure of facility safety systems has occurred or is imminent. Off-site releases are expected to exceed permissible limits for either radionuclides or toxic materials.	Predetermined measures to protect on-site personnel, the public, and the environment are initiated. There is continuous assessment of on-site and off-site conditions and exchange of information between all emergency response organizations.

and businesses close to the facility. These radios are permanently tuned to the EBS frequency and turn on when activated.

In case of a general emergency, everyone within a given distance of the facility must be provided with a warning to remain indoors or to evacuate. If evacuation is appropriate, information would be given on where to go and how to obtain transportation. For most power reactors in the United States, this distance is about ten miles; the specific area varies with the facility and is largely determined by political and physical boundaries. Nuclear installations containing smaller inventories of radioactive material and having lower probabilities of incidents that could disperse this material over large areas may have a smaller mandatory notification area. This area is termed a plume exposure pathway zone because the principal cause of radiation exposure is a cloud of airborne radioactive materials. Materials released to the environment disperse through the atmosphere like a cloud moving downwind and slowly spreading out in the other directions. As the could or plume moves away from the point of release, it disperses over larger and larger volumes of air and effectively dilutes concentrations of radionuclides in the atmosphere. If it reaches the ground, the cloud becomes a source of radiation exposure to individuals downwind from the facility.

Submersion in the plume leads to whole-body exposure from radiation sources external to the body. Additional exposure from sources internal to the body result if any of the radioactive material is taken into the body. Inhalation can lead to the deposition of radioactive materials in the body; some elements are readily taken up by the body and concentrate in various organs. Of particular interest are the radioactive forms of the element iodine. Iodine is soluble to some extent in all of the soft tissues of the body and is concentrated in the thyroid gland. A small activity of iodine in the thyroid can lead to large local dose commitments to this gland. The smaller the thyroid, the larger the dose commitment; for this reason, protective actions are based on the projected dose commitment to the thyroid of a child as well as for whole-body radiation doses. Thyroid doses can be reduced significantly by the use of an iodine-containing blocking agent. Oral administration of potassium iodide (KI) in the form of tablets or solution before or within a few hours of any intake of radio iodine saturates the thyroid so that the probability of absorption of the radioactive material is greatly reduced. While negative side effects of KI in most persons are negligible, some individuals have adverse reactions to intakes of iodine in any form. Use of a thyroid blocking agent is more likely to be recommended for some emergency response personnel than for the general public.

Guidelines published by the Environmental Protection Agency (EPA) specify that evacuation should be initiated if the TEDE is projected to exceed 1 rem or if the committed dose equivalent (CDE) to the thyroid is expected to exceed 5 rem. With the approval of state health officials, Kl would be administered if the thyroid CDE is projected to exceed 25 rem. No specific minimum TEDE or thyroid CDE values have been established for recommending that individuals be sheltered rather than be evacuated. Sheltering is always preferred to evacuation whenever it offers equal or greater protection; evacuations require significant resources and greatly complicate emergency planning.

Emergency managers must arrange for transportation, traffic control, and temporary sheltering in an evacuation. Reception centers are established so that evacuees can be monitored for contamination and registered. These centers serve as clearing houses for information about evacuees and make it easier to locate family and friends and to allay their concerns.

Special problems are associated with evacuating and providing temporary shelter for residents of nursing homes, patients in all types of hospitals, and inmates of correctional facilities. Nonradiological risks to the evacuees and the general public must be weighed against the risks from radiation exposure. Of specific concern are maintaining control of potentially dangerous individuals and psychological trauma to patients during evacuation and residence in temporary quarters. Close coordination and prior planning between the emergency manager of the nuclear plant and the directors of these institutions are vital.

Another problem is encountered when areas used for hunting or fishing are in close proximity to the nuclear installation. Provisions must be made to warn and evacuate individuals in the field. Nearby golf courses also require consideration. Because of the variation in outdoor activities, the season of the year can affect emergency plans and operations.

In addition to the plume pathway exposure zone, an agriculture or food ingestion pathway has been defined. Usually, it extends to a distance of about 50 miles from the facility. Provision is made for postaccident sampling of water and foodstuffs within this zone. The goal is to determine the level of contamination caused by the incident to material that might enter the food chain. The three pathways for ingestion generally considered are milk, water, and other food. Deposition of radionuclides on the forage for animals and on the soil are considered in addition to the contamination of food and water directly ingested by humans. Actions are taken to prevent or reduce contamination of milk or other food. These include sheltering milk-producing animals and placing them on stored feed and covered water.

Current guidance from the Food and Drug Administration (FDA) calls for protective actions to be initiated if the CEDE is expected to exceed 0.5 rem or the CDE

to any individual organ or tissue is expected to exceed 5 rem. Actions might include interdiction or condemnation of foods, feed, or other potentially contaminated product. These steps require that farmers, food processors, distributors, and municipalities or water companies in the 50-mile radius be informed of appropriate actions. If an embargo is imposed, transportation restrictions are instituted to prevent the movement of contaminated food and other items.

In the accident at the Chernobyl reactor in the former Ukranian Soviet Socialist Republic in 1986, there was extensive contamination over a wide region. Deposition of radionuclides was not uniform; localized regions of very high contamination were found. Some areas very close to the reactor had very little contamination. Local meteorological conditions and the nature of the materials released in an incident strongly affect the pattern of ground contamination. After extensive study of the Chernobyl accident, the NRC and FEMA have concluded that a 10-mile plume pathway and a 50-mile ingestion pathway emergency planning zones are adequate to protect the health of the public.

C. Public Information

It is imperative that accurate, timely information on the status of the nuclear facility be furnished to emergency workers, plant management, and the media. This requires attention to the details of communication; a significant investment in both telephone and radio equipment must be made. Face-to-face contacts are the most efficient means of communication; for this reason, emergency operating facilities should have enough space for managers, technical advisors, and regulators. Reliable means of information exchange between on-site and off-site facilities are another requirement.

Media representatives should be provided with space in a safe location where they can have access to knowledgeable individuals without disrupting emergency operations. Accurate and timely information given to the press can prevent accidental or deliberate spread of misinformation and serve as the basis for a rumor-control program. Visual aids are extremely useful, especially for television coverage. Layouts, maps, and process diagrams help ease the task of explaining normal plant operations and abnormal conditions to nontechnical people. Emergency drills should include the preparation of press releases as well as official advisories to the general public. Contacts should be formalized with knowledgeable individuals not employed by the operator of the facility to provide the media with credible, independent assessments of the situation and its probable consequences. Engineering and science professors from nearby universities can be excellent resources if they are familiar with the facility and have been trained to communicate effectively with the media.

IV. PLANNING

A. Influence of Three Mile Island

The pressurized water reactor, Three Mile Island Unit 2, was involved in a serious loss of coolant accident in March 1979. This accident destroyed the core of the reactor and spread high levels of radioactivity throughout the plant buildings. In spite of the magnitude of damage to the plant, the radiological consequences to the general public were minimal. Most of the radioactive materials were retained within the reactor cooling system and the surrounding structures. Only the inert gases, krypton and xenon, and an extremely small fraction of the volatile solid, iodine, were dispersed into the atmosphere. Therefore, radiation doses to individuals outside of the installation were extremely low.

In spite of the small environmental impact, this accident had a far-reaching influence on emergency planning at nuclear power plants. The event received heavy media attention, and shortcomings in providing information to the public were highlighted. Political reactions imposed more rigorous requirements on power reactor operators. The utilities responded by making changes in their organizations and by devoting more effort to improving their ability to respond to emergencies. Outside organizations, such as state and local government agencies, became an important factor in their planning process. Emergency operating facilities were upgraded, and instrumentation designed to furnish data about the status of the plant under abnormal conditions was added. Improvements in providing information to the media and to the public were incorporated in plans. More frequent formal exercises were conducted to test both on-site and off-site response to simulated emergencies. Many of the advances in the field of emergency planning can be directly attributed to lessons learned from the Three Mile Island accident. Nonnuclear installations, such as large chemical plants, have adopted some of the emergency response techniques from plans developed for power reactors.

B. Department of Energy Operations

Most of the attention to emergency planning has been focused on nuclear power plants operated by electric utility companies. In addition to power reactors, other nuclear facilities are in operation worldwide. All require emergency plans to protect the public as well as the plant workers. Some of these installations are conducting energy research and development; others are engaged in national security work. Emergency planning is complicated by the requirement of maintaining security on both the facilities themselves and the information produced therein.

In the past few years, concern has been expressed about the safety of government-owned, contractor-operated plants in the United States that are under the purview of the Department of Energy. Some of them were constructed before the advent of today's strict standards of safety. Because of the nature of their missions, they are not subject to as much public scrutiny as are commercial nuclear power plants. Work in fields associated with national defense, such as nuclear weaponry and naval propulsion reactors, is deliberately kept from those who do not have a "need to know" to maintain security. This lack of information can lead to mistrust, especially in safety-related areas. Although some details cannot be released to the public, all of these facilities have emergency plans appropriate to the level of hazard that exists. Their employees participate in continuing training programs that include periodic emergency response exercises.

The ongoing missions of these installations have led to the development of technical resources that can be made available to others in case of serious accidents. The Department of Energy has organized radiological assistance teams that can be deployed to assist operators of any nuclear facility. Their people and equipment provide specialized capabilities that would be beyond the reach of any individual organization. The Department of Energy is the lead agency in establishing the Federal Radiological Monitoring and Assessment Center, which coordinates response and recovery efforts. All radiological assistance plans and procedures are coordinated with the appropriate federal, state, and local agencies as well as with those entities licensed to handle radioactive materials. Periodic exercises are conducted to maintain the level of competence required to assist in a variety of emergencies involving the transportation of radioactive materials and weapons components as well as at fixed nuclear facilities. One highly specialized mission, the detection of clandestine nuclear materials, is handled by the Department of Energy through their nuclear emergency search teams.

C. Experience at Chernobyl

In April 1986, one of the four plants in the Chernobyl power reactor complex in the former Ukranian Soviet Socialist Republic was destroyed by an accident that had serious local consequences and dispersed radioactive materials throughout much of the Northern Hemisphere. Even though the design of the reactor and the surrounding buildings are different from those in the West, the response of the Soviet government is of interest to emergency planners. A test of the plant emergency power capabilities initiated a sequence of events that led to at least one steam over-pressure explosion and perhaps several violent hydrogen–oxygen reactions that destroyed the reactor core and the surrounding structures.

In the former Soviet Union (now Russia), there was strong central government involvement in planning in all official activities; emergency operations were no exception. The line between military and civilian actions was blurred because of their traditional devotion to maintaining a strong defense posture. Many of their actions followed procedures developed to mitigate the effects of nuclear weapons. Indeed, the military played a key role in both the immediate and long-term phases of emergency operations. Detailed plans to protect the public were not in place when the accident occurred, however, the resources of the nation were made available within a matter of hours to days.

The most pressing problem immediately after the accident was to fight the fires started by high-temperature materials, such as graphite, that were ejected from the reactor. It took station personnel and local firefighters several hours to extinguish the flames. During this time, many of them experienced severe thermal burns as well as radiation overexposures. Two people were killed in the initial explosion; the other 29 fatalities were in the group that fought the fires.

The explosions destroyed away structures designed to contain the radioactive materials in the reactor core; for some time, there was a direct path for materials released from the core to reach the atmosphere. Graphite in the reactor burned in the presence of air, creating a thermal plume that pushed gaseous and volatile materials into the environment. Heat caused this plume to rise to high altitudes where varying winds spread the debris in many directions. Radioactivity deposited in the immediate vicinity caused extremely high levels of radiation in and around the remains of the reactor building.

After some initial delays caused by confusing information from the plant, the cental government in Moscow began to pour extensive resources into Chernobyl and the surrounding areas. Medical assistance, field hospitals, and technical experts from all over the Soviet Union were dispatched. The more seriously injured were sent to hospitals in Moscow and Kiev. Personnel living close to the reactor who were not involved in emergency services were evacuated about 36 hours after the accident. Hundreds of buses and trucks from Kiev were dispatched for this task. About 45,000 people were evacuated in a few hours from the nearby town of Pripyat. Evacuation of other persons within 30 km of the plant site was started later and completed within a week of so after the accident. Initially, authorities had instructed nearby residents to remain indoors and to minimize any time spent outside. Because much of the radioactivity was lifted to high altitudes by the thermal plume, local radiation levels outside of the plant site remained relatively low, so sheltering was an effective means of reducing exposure to airborne radiation sources. Emergency workers and persons residing close to the plant were

issued potassium iodide pills within a day or two after the accident to reduce the uptake of radioactive iodine by the body; this was effective in reducing radiation exposures to the thyroid gland.

To slow the rate of release of radioactive materials, tons of sand, limestone, lead, and boron-containing materials were dropped by helicopter onto the exposed core. Military aircraft also were used for surveys of airborne activity. The close coordination of military and civilian resources was a characteristic of emergency response operations at Chernobyl.

Decontamination around the plant has been an enormous task involving thousands of people. One of the striking characteristics of this accident was the wide variation of contamination levels around the plant. Some areas close to the reactor were relatively unaffected; other more distant spots had very high levels of radioactivity. This illustrates the importance of naturally occurring processes, such as gravitational settling of particles and the effect of rainfall, on removing radioactive materials from the atmosphere.

The reactor itself has been encased in a concrete and steel sarcophagus that has provisions for heat removal and monitored release of filtered gases to the atmosphere. Dikes and trenches were constructed to limit the risk of contaminating the nearby Pripyat River and Kiev Reservoir. Plastic films have been applied over several hundred thousand square meters of ground surface to trap contamination and to limit its transport in the environment. Unfortunately, the structural integrity of the sarcophagus has deteriorated over the years, and there is concern that a seismic event could cause it to collapse. Ongoing financial problems in the former Soviet Union limit the steps that have been taken to assure continued confinement of the remaining radioactive materials within the destroyed reactor.

Experience gained at Chernobyl has been incorporated into emergency planning for both civilian and military operations in many nations. Valuable lessons learned at a high cost have been shared with other nations. This accident challenged the resources of the former Soviet Union and gave Western observers a rare glimpse of emergency response in a nation with a high degree of social organization.

SEE ALSO THE FOLLOWING ARTICLES

HEALTH PHYSICS • NUCLEAR ENERGY, RISK ANALYSIS • NUCLEAR RADIATION DETECTION DEVICES • NUCLEAR REACTOR MATERIALS AND FUELS • NUCLEAR SAFEGUARDS • RADIATION SHIELDING AND PROTECTION • RADIOACTIVE WASTES

BIBLIOGRAPHY

McKenna, T., Trefethen, J., Gant, K., Jolicoeur, J., Kuzo, G., and Athey., G. (1996). "RTM-96: response technical manual," U.S. Nuclear Regulatory Commission Report. NUREG/BR-0150, Vol. 1, rev. 4, March.

Soffer, L., Burson, F. B., Ferrell, C. M., Lee, R. Y., and Ridgely, J. N. (1995). "Accident source terms for light-water nuclear power plants," U.S. Nuclear Regulatory Commission Report. NUREG-1465, February.

Turner, D. B. (1994). "Workbook of Atmospheric Dispersion Estimates: An Introduction to Dispersion Modeling," 2nd ed., Lewis Publishers, Boca Raton, FL.

U.S. Department of Energy. (1994). "Airborne release fractions/rates and respirable fractions for nonreactor nuclear facilities," Vol. 1. Analysis of Experimental Data. DOE-HDBK-3010-94, December.

U.S. Nuclear Regulatory Commission. (1998). "Nuclear fuel cycle facility accident analysis handbook," U.S. Nuclear Regulatory Commission Report. NUREG/CR-6410, March.

U.S. Federal Emergency Management Agency. (1998). "Guidance for developing state, tribal, and local radiological emergency response planning and preparedness for transportation accidents," Federal Emergency Management Agency Report. FEMA REP-5, rev 2, December.

Weinstein, E. D., Bates, E. F., Adler, M. V., and Gant, K. F. (1995). "Guidance for a large tabletop exercise for a nuclear power plant," U.S. Nuclear Regulatory Commission Report. NUREG-1514, March.



Nuclear Fuel Cycles

Ronald A. Knief
XE Corporation

I. Overview
II. Unique Features
III. Uranium Fuel Cycle
IV. Recycle
V. Alternative Uranium Fuel Cycles
VI. Plutonium Fuel Cycle
VII. Thorium Fuel Cycle
VIII. Other Fuel Cycles
IX. Support Activities

GLOSSARY

Chain reaction Sustained reaction wherein neutrons cause fissions, which in turn produce more neutrons, which cause the next generation of fissions.
Critical Condition where a fission chain reaction is stable with production balancing losses at a nonzero neutron level.
Enrichment Process in which isotopes are separated by physical means; applies primarily to separating ^{235}U from natural uranium, but also to separating deuterium (e.g., as heavy water) from hydrogen in water.
Fertile Material, not itself fissile, capable of being converted to fissile material following absorption of a neutron.
Fissile Material capable of sustaining a fission chain reaction.
Fission Process in which a heavy nucleus splits into two or more large fragments and releases kinetic energy.
Radioactivity Emission of particulate or electromagnetic radiation from an energetically unstable nucleus.
Reactor Combination of fissile and other materials in a geometric arrangement designed to support a neutron chain reaction.
Recycle Reuse of nuclear fuel material that has been separated from fuel previously used in a reactor.
Reprocessing Process of separating nuclear fuel and waste constituents contained in spent reactor fuel.

THE USE OF nuclear fission fuels for energy production depends on a fuel cycle that takes uranium ore from the ground, prepares fuel for use in a nuclear reactor, and handles the used fuel material and the byproduct wastes. This fuel cycle is more complex and extensive than those associated with other fuels, due to unique features of the fission chain reaction and steps. (Fusion, a form of nuclear energy that has not achieved commercial status, has its own fuel cycle.)

I. OVERVIEW

The current basis for commercial application of nuclear energy in the fission process. A neutron striking a heavy nucleus such as uranium-235 (^{235}U) may cause it to *fission* or split into two or more parts, release energy, and give off additional neutrons and other radiations. Desired aspects of the reaction are large energy release (more than 50 million times as great as that from burning a carbon atom in a fossil fuel) and neutrons that can cause additional fissions and lead to a sustained chain reaction in a system called a *reactor*. Materials that can support a chain reaction by themselves are said to be *fissile*, while those that are *fertile* can be converted into fissile materials when struck by neutrons. A balanced steady-state chain reaction, which can produce energy at a constant-rate, is said to be *critical*.

Disadvantages of the fission process for energy production relate to the particulate and electromagnetic radiations emitted at the time of fission and to the radioactivity (i.e., the property of emitting radiation with a characteristic time frame or *half-life*) of the fission fragments and their products. These and other concerns are addressed by the design and operation of the steps in the nuclear fuel cycle.

II. UNIQUE FEATURES

Each fuel used for energy production is characterized by a fuel cycle. Typical cycles, such as with fossil fuels, include

1. exploration
2. mining or drilling to extract the resource
3. processing or refining to remove impurities and otherwise prepare the fuel for use
4. energy production
5. waste disposal
6. transportation among other steps

The nuclear fuel cycle is more complex due to the following unique features associated with the fission energy source.

1. Uranium-235 (^{235}U), the only naturally occurring material that can support a chain reaction, is less than 1% abundant in natural uranium.
2. Two other fissile materials, ^{233}U and ^{239}Pu (plutonium-239), are produced by neutron bombardment of fertile ^{232}Th (thorium-232) and ^{238}U, respectively.
3. All fuel materials contain small to large amounts of radioactivity.
4. A neutron chain reaction (criticality) could occur in fuel materials located outside of a reactor.

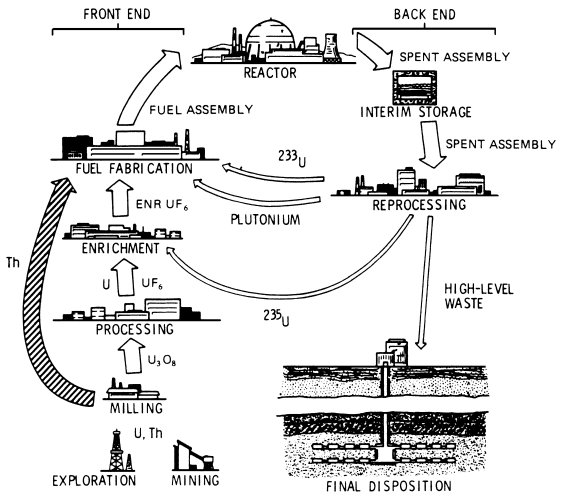

FIGURE 1 Generic nuclear fuel cycle material flow paths. [Knief, R. A. (1992). "Nuclear Engineering: Theory and Technology of Commercial Nuclear Power," 2nd ed., Taylor & Francis/ Hemisphere, New York.]

5. The fission chain reaction used for commercial power generation has potential application to a nuclear explosive device.

Each of these concerns influences one or more of the fuel-cycle steps.

A schematic representation of a generic nuclear fuel cycle is shown in Fig. 1. The steps preceding reactor use of the fuel are classified as front end and characterized by small amounts of radioactivity per unit mass of material handled. Following reactor use, the resulting highly radioactive fuel is handled in the back end steps of the cycle. Fuel-cycle elements not appearing by name on Fig. 1 are transportation (between other steps), radiation safety, criticality safety, and material safeguards.

Major fuel-cycle features are described next, starting with those for the uranium fuel cycle employed by the current generation of popular pressurized-water reactors (PWRs) and boiling-water reactors (BWRs), known collectively as light-water reactors (LWR). Subsequent sections consider recycle of uranium and plutonium in LWRs, alternative uranium fuel cycles, plutonium and thorium fuel cycles, other fuel-cycle concepts, and support activities.

III. URANIUM FUEL CYCLE

The uranium fuel cycle (e.g., Fig. 1) for the light-water reactors (LWRs) may be implemented as an "open" cycle, which does not proceed past interim spent fuel storage. A completed or "closed" cycle would include reprocessing,

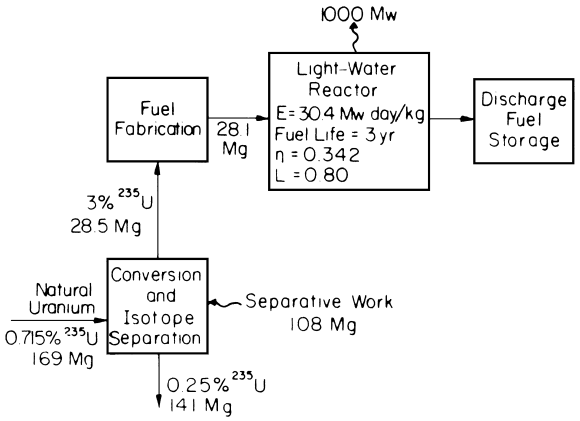

FIGURE 2 Nuclear fuel cycle material flow sheet for a typical pressurized-water reactor (PWR) without fuel recycle. [From Pigford, T. H. (1978). *In* Report to the APS by the Study Group on Nuclear Fuel Cycles and Waste Management, Part II. *Rev. Mod. Phys.* **50**(1).]

with or without recycle of uranium or plutonium, and waste disposal.

Each major step of the LWR fuel cycle is described below. Typical mass flows for an open LWR cycle are shown in Fig. 2. Capacities of typical fuel cycle facilities are provided in Table I. Estimates of world-wide uranium resources and reported capacities of various fuel-cycle facilities are provided in Table II.

A. Exploration

Uranium exploration typically begins with geologic evaluation to identify formations similar to those known to contain the ore. Chemical and radiological testing confirm probable sites.

Prospect sites are drilled for core samples, which are subjected to detailed evaluation through various nondestructive or destructive analyses. For areas selected for mining, core samples provide a basis for detailed mapping of the ore bodies.

TABLE I Typical Capacities for Nuclear Fuel-Cycle Facilities

Facility	Capacity (tonnes/year)
Underground mine	14 U
Surface mine	140 U
Mill	807 U
UF_6 conversion	15,000 U
Enrichment	2400 U
Uranium fabrication	1500 U
Mixed-oxide fabrication	360 U + Pu
Spent-fuel storage	3500 U + Pu (total capacity)
Reprocessing	2000 U + Pu

From U.S. Nuclear Regulatory Commission. (1976). Final Environmental Statement on the Use of Recycle Plutonium in Mixed Oxide Fuel in Light Water Reactors (GESMO). NUREG-0002. Washington, D.C.

B. Mining

Assays of less than 0.25% U_3O_8 equivalent in the ore have been typical in the United States (although significantly higher values found in locations such as in western Africa, Australia, Canada, and elsewhere). Even though the very low assay means that hundreds of units of ore must be mined for each unit of uranium recovered, the reference value still provides 30 to 50 times the energy production per unit mass mined as is typical of coal.

Uranium ore bodies tend to be "spotty" (i.e., thin and not too wide or long) and widely separated by low-grade ore or barren sands. Surface or open-pit mining techniques are employed for shallow deposits with relatively soft overburden. Underground methods are used for deeper deposits or those covered with very hard rock strata.

C. Milling

Milling or refining operations are often conducted close to the mines to minimize the amount of transportation required for the bulky ore. The low assay of the uranium ore dictates against the use of standard metallurgical techniques in favor of complex chemical methods.

One approach to separation of uranium from the ore consists of the following.

1. Crushing and grinding the ore to desired size.
2. Leaching in acid to dissolve the metallic constituents away from the sand-like residues that constitute the bulk of the ore.
3. Ion-exchange or solvent-extraction operations to separate uranium from other metallic constituents.
4. Production of ammonium diuranate (called yellowcake due to its color).

The large volume of ore residues, or tailings, must be disposed of.

D. Conversion

Reactor applications require very-high-purity uranium, especially in terms of impurities with a large tendency to absorb, and thereby remove, neutrons needed to sustain the fission chain reaction. Initial purification of yellowcake is obtained by solvent extraction. Treatment of the concentrate with hydrofluoric acid and elemental fluorine

TABLE II Worldwide Uranium Resource Estimates and Fuel-Cycle Processing Capacities[a]

	Reasonably Assured Uranium Reserves[b] (1000 tU)		Fuel-Cycle Facilities[c]										
Country	<$80/lb	$80–$130/lb	1998 Uranium production[d] (tU)	Milling capacity (tU/y)	Refining/ conversion capacity (tU/y)	Enrichment capacity (tSWU/y)	Uranium fabrication capacity (tHM/y)	Mixed-oxide fabrication capacity (tHM/y)	Away-from-reactor storage capacity (tHM) Wet	Away-from-reactor storage capacity (tHM) Dry	Reprocessing capacity (tHM/y)	Underground repositories	Heavy water production capacity (t/y)
Algeria	26												
Argentina	5	4	35	6	2 212		1 160		1 986				
Armenia										0/1 -/74			
Australia	622	93	4,885	4/1 4 8506/1500		1 0							
Belgium			15				1 500 1M 40		1 700	1 800			
Brazil	162			1 350	2 90	1/2 0	1 100						
Bulgaria	8			3					1 600				
Canada	331		10,924	4/1 16520/1200	4 34300		4 1 4001 1M 1			6/1 2 8321/9120			
Central African Republic	8	8											
Chile	*d*												
China, Peoples Republic			500	6 2 760	1 400	2/1 1100/500	1 100		0/1 -/1550		0/2 -/800		
Columbia	*d*									1 600			
Czech Republic	7	24	610	1 2 500									
Denmark		27					1 50 el						
Egypt							1 0						
Estonia				1									
Finland		2							3 1694			LLW/ILW	

France	13	9	508	1 5 650	7 1 51900	2/1 1 10800	2 1 950 2M 140		6 15200	1 180	2 2 1600		
Gabon	6		731	1									
Germany		3	40	4		2 1 1100	1 1 650		**1**	3/3 7768/2238		LLW/ILW	
Greece	1												
Hungary	0.4		10	1 650						1 160			
India		52	200	2 320	2 400		4/2 295/1260 1 50		1 280	2 27	3 260		
Indonesia		6		1			2 0						
Iran	[ ]												
Italy	5						3 1M		0/1 -/3000	1/1 609/812			
Japan		7		2	1 4 440	4 2 1250	4 1674 3M 1 15						
Kazakhstan	439	162	1250	3/2 2600/1400			1 2000						
Korea, South		(10)			1 200		3/1 800						
Kyrgystan				1 2000									
Mexico		2		1	1								
Mongolia	62												
Morocco													
Namibia	156	31	2762	1 4500									
Netherlands						1 1150							
Niger	70		3731	2 4150									
Norway	*d*												

continues

TABLE II (*Continued*)

Country	Reasonably Assured Uranium Reserves[b] (1000 tU)		Fuel-Cycle Facilities[c]											
	<$80/lb	$80–$130/lb	1998 Uranium production[d] (tU)	Milling capacity (tU/y)	Refining/ conversion capacity (tU/y)	Enrichment capacity (tSWU/y)	Uranium fabrication capacity (tHM/y)	Mixed-oxide fabrication capacity (tHM/y)	Away-from-reactor storage capacity (tHM) Wet	Away-from-reactor storage capacity (tHM) Dry	Reprocessing capacity (tHM/y)	Underground repositories	Heavy water production capacity (t/y)
Pakistan			23	2 51	1 0	1 5	1 20						
Peru	2												
Portugal	7	2	19	2 5 72									
Romania		7	100	1 600									
Russian Federation	145		2000	1/3 3500/6000	2 1 24000	4 15000	5/1 3370/100 2/1M 1/0		6 14960	3 401	3 401		
Slovakia									1 600				
Slovenia	2			1					1 600				
Somalia		7											
South Africa	218	52	962	3 13 6450	1	[300]	1 1 1						
Spain	5	8	255	1 3 950			1 300						
Sweden		4		1			1 600		1 5000			LLW/ILW	
Switzerland										0/2 /1050			
Taiwan										0/2 -/0			
Tajikistan				1									
Turkey	9			1	1 0								
Ukraine	46	38	500	1 1 2000					1 2518	0/1 12875			
United Kingdom					6/1 1 550[hm] 18069	1 1 1300	4 3 500 el 1920 1M 1 8		5 10300	1 700	2 2700		

United States	110	251	1872	7 29 3645	1/2 2 14000	3 27200	5 4 3900 0/1M -/0		5 2877	4/13 5475/10046 5	1 3 0		
Uzbekistan	66	17	2000	1 4000									
Venezuela	*d*												
Viet Nam		1											
Zambia	*d*												
Zaire	2												
Zimbabwe	2												
TOTAL	2340 (Adjusted) RAR	718 (Adjusted) RAR	33932										
TOTAL[e]	745 (Adjusted) EAR Cat. I	244 (Adjusted) EAR Cat. I											

KEY

[a] Source: International Atomic Energy Agency (IAEA) web-site www-nfcis.iaea.org (2/5/00) except as noted (see footnotes *b* and *c*).

[b] Source: "Uranium 1997: Resources, Production and Demand 1998 Edition," Nuclear Energy Agency, Organization for Economic Cooperation and Development, Paris, Sept. 1998. Totals are for Reasonably Assured Resources (RAR) and Estimated Additional Resources Category I (EARI).

[c] $\frac{\#O/\#C+P}{\text{Capacity } O/C+P}$ $\frac{\#S+D}{}$ In **O**peration; **P**lanned; Under **C**onstruction; **S**hutdown/**D**ecommissioned **M**OX.

[d] *Source*: Uranium Institute www.uilondon.org (2/2/00).

[e] Estimated Additional Resources Category II (EAR-2) or Speculative Resources from *a* above.

produces UF_6 (uranium hexafluoride) and fluoride compounds of the other constituents. Using a fractional distillation process, the other fluorides are driven off, since they are more volatile than the UF_6.

The final product of this conversion step in the fuel cycle is highly pure UF_6. This compound—a gas at temperatures above 56°F at atmospheric pressure—is readily employed in several methods for enriching uranium in its fissile ^{235}U isotope.

E. Enrichment

Natural uranium, the mixture that exists in nature, is composed of 0.711 wt.% ^{235}U and 99.3 wt.% ^{238}U. Most reactor concepts call for a higher fraction of the fissile ^{235}U, such as the 2–5 wt.% slightly enriched uranium used in LWR systems. This necessitates isotope separation or *enrichment*. Since by definition these two isotopes are both forms of the element uranium and cannot be separated by ordinary chemical means, physical means of enrichment have been implemented.

Several enrichment methods rely on the small difference in mass between UF_6 molecules of the two isotopes. According to the kinetic theory of gases, each molecule has the same average kinetic energy ($=\frac{1}{2}mv^2$), so that the lighter molecule will have the greater speed, and the heavier a lesser speed. Other enrichment methods are based on differences in absorption of laser radiation by the energy levels of the respective nuclei or on slight shifts in chemical equilibrium reactions.

Enrichment processes for any materials may be characterized by the amount of separation that occurs in a single unit or stage. A separation factor α may be defined as

$$\alpha = \frac{e/(1-e)}{d/(1-d)}, \tag{1}$$

where e and d are the initial and final ^{235}U isotopic fractions in the material streams, designated as "enriched" or "depleted," respectively. Since α is often small, it is usually necessary to couple many individual units or stages. The two output streams from the system as a whole are for the enriched product and the depleted tails.

1. Gaseous Diffusion

The gaseous diffusion enrichment method employs cylindrical barriers of precisely controlled porousity against which UF_6 is forced. As shown by Fig. 3, the lighter $^{235}UF_6$ molecules, with their slightly greater average speed, tend to pass preferentially through the barrier, leaving behind the heavier $^{238}UF_6$ molecules.

The enriched stream collects in the outer portion of the stage in Fig. 3 with a theoretical or ideal separation factor

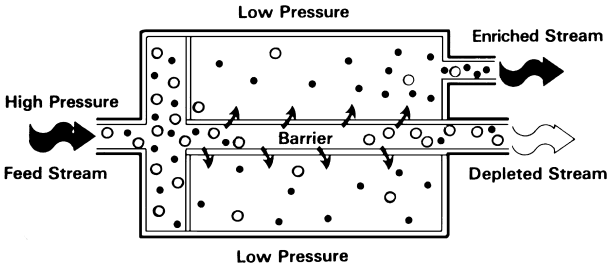

FIGURE 3 Schematic of typical gaseous diffusion enrichment stage. ●, ^{235}U; ○, ^{238}U. [Courtesy of U.S. Department of Energy.]

of only $\alpha = 1.0043$. This low value leads to a requirement for many passes through the stage or arrangement of many stages in cascades of the type shown by Fig. 4. In practice, about 1200 stages are required to enrich natural uranium to the 3 wt.% ^{235}U typical of light-water reactor fuel. The tails composition is generally in the range of 0.2–0.35 wt.% ^{235}U.

Gaseous diffusion has produced most of the enriched uranium in the United States, France, and the Russia. It is the largest user of energy in the nuclear fuel cycle, at about 4% (e.g., if one reactor were dedicated to supplying enriched uranium, it and 24 others of the same size could be served).

2. Gas Centrifuge

When UF_6 gas is contained in a high-speed centrifuge, such as shown in Fig. 5, the forces cause the heavier $^{238}UF_6$ molecules to be driven preferentially to the outside. The lighter $^{235}UF_6$ molecules tend to stay toward the center. The combination of the centrifuge effect with a thermal flow pattern allows the enriched gas to be drawn off at the bottom near the axis, while the tails stream exits near the top toward the outside wall.

Although the gas centrifuges operate with a higher separation factor of about $\alpha = 1.10$, it is still necessary to cascade a large number of units together to obtain slightly

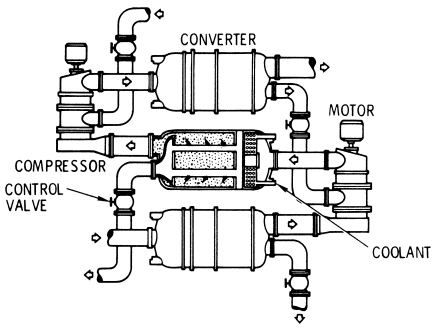

FIGURE 4 Section of typical gaseous diffusion enrichment cascade. [Courtesy of U.S. Department of Energy.]

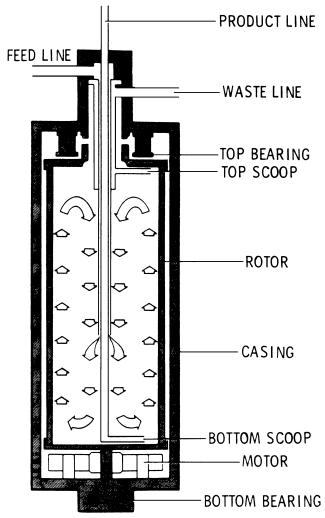

FIGURE 5 Schematic of typical gas centrifuge enrichment stage. [Courtesy of *Nuclear Engineering International*.]

enriched uranium fuel. A major advantage, however, is that energy consumption is less than 10% that of gaseous diffusion for the same product; thus, it is considered a most viable replacement for the latter. The gas centrifuge method is currently in widest use in Western Europe, where additional capacity is also being built. Centrifuges also have been used in Russia and are being built in Japan.

3. Laser

The several laser enrichment methods rely on exciting quantum energy levels in uranium atoms or molecules such that they may be readily separated. Since ^{235}U and ^{238}U have distinct energy levels, separation as high as 50% may be possible in a single pass.

The atomic vapor laser isotope separation (AVLIS) method, shown conceptually in Fig. 6, produces uranium vapor, injects laser energy at the precise frequency to ionize only the ^{235}U atoms, and separates the ^{235}U ions from the ^{238}U atoms with an electromagnetic field. Research and development efforts on this method are top priority in the United States and of great interest in France, Japan, and elsewhere.

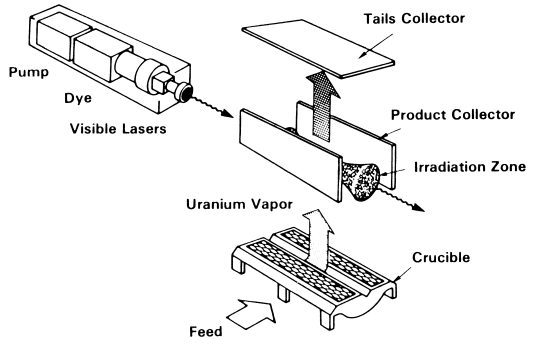

FIGURE 6 Operating principle for atomic vapor laser isotope separation (AVLIS) process for uranium enrichment. [Courtesy of U.S. Department of Energy.]

Another of these methods under development in Japan is molecular laser isotope separation (MLIS). The chemical reaction by isotope selective laser activation (CRISLA) process is being developed by a private U.S. firm.

4. Other Enrichment Methods

The gas nozzle (or "Becker nozzle," after the German scientist credited with its development) is one of several aerodynamic separation processes. The UF_6 gas mixed with hydrogen or helium separates into isotopic constituents based on the ability of the lighter $^{235}UF_6$ to negotiate a tighter "turn" at a fixed, curved wall. The method, capable of a separation factor of about 1.01–1.02 for UF_6, is being used in South Africa. A different version of the process has been developed in Germany for use in a Brazilian plant.

Chemical exchange enrichment is based on the exchange reaction

$$AB + A'C \rightleftarrows A'B + AC, \tag{2}$$

where slightly differing affinity of isotopes A and A′ for the two other chemical species B and C is the basis for separation. Although the separation factor of about 1.002 is relatively low and the equilibrium reaction time is very long, the process has an advantage in being able to produce only low-enrichment fuel (e.g., where it is desired to have positive controls against using commercial technology for possible weapon production, as mentioned in Section IX). A prototypical unit has been operated successfully in France. Japan has active research and development in chemical separation.

F. Fabrication

The uranium fuel is produced in final form for power production in the fabrication step. Fabrication of LWR fuel begins with converting the slightly enriched uranium from the enrichment process into uranium dioxide (UO_2) powder. The powder is then pressed into cylindrical pellets roughly the size of a thimble. The black ceramic UO_2 is a popular fuel material because of its strength and ability to retain gaseous and other radioactive products that are produced by the fission chain reaction.

Long stacks of pellets are loaded into stainless-steel or zirconium-alloy cladding tubes, which are welded shut to form individual leaktight fuel rods (which provide yet another barrier to fission product release). Clusters of

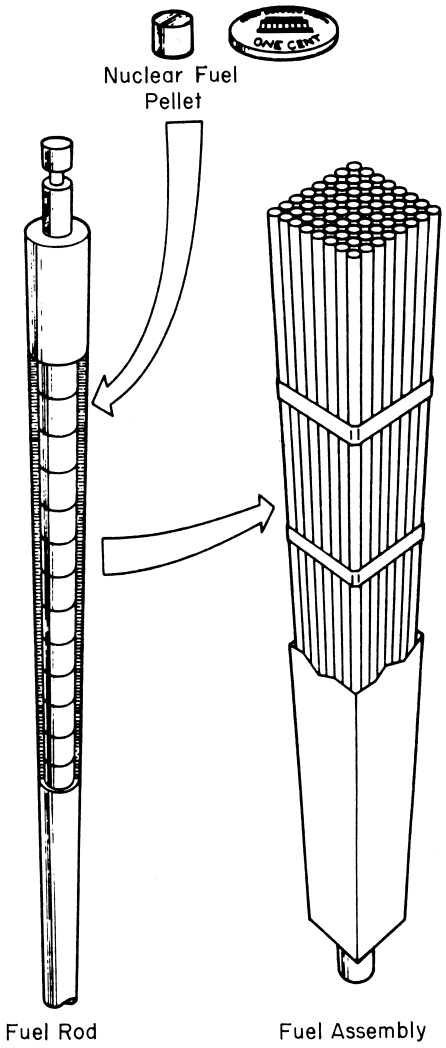

FIGURE 7 Fuel pellet, pin, and assembly concept for a light-water reactor (LWR). [Courtesy of U.S. Department of Energy.]

fuel rods in square arrays of from 8×8 to 17×17 rods locations (or, in a Russian reactor, a hexagonal array with up to 331 rod locations) with other hardware form fuel assemblies or fuel bundles. The concept of fuel pellet, rod, and assembly is shown by Fig. 7.

Fuel assemblies may be made from pins of a single fuel enrichment, pins of several average enrichments, and/or other components. For a reactor's initial loading, it is common to fabricate bundles of three or four average fuel enrichments. Later loadings may only require a single average bundle enrichment.

G. Reactor Use

Completed fuel assemblies in numbers from about 150 to 750, are loaded in a reactor vessel in a roughly cylindrical shape to form the reactor core. In this configuration with water added and the vessel sealed, the fission chain reaction can be initiated to produce heat (and ultimately electrical) energy.

As fissions occur, the ^{235}U atoms are "burned out" in place. Plutonium is produced as extra neutrons are absorbed by fertile ^{238}U. The buildup of fission fragments and their radioactive products produces a "poisoning" effect by absorbing neutrons that could otherwise participate in the fission chain reaction. Since the depletion of ^{235}U and poisoning effects dominate, the fuel must eventually be replaced if the chain reaction is to be continued.

Current practice is to replace one-fourth to one-third of the core on a roughly annual basis. Careful fuel management shuffles existing and replacement fuel assemblies to optimize power production and energy extraction over the fuel lifetime of 3–4 years.

The back end of the nuclear fuel cycle (see Fig. 1) begins with the removal of spent fuel from the reactor vessel. Each remaining operation requires radiation shielding and heat removal capability, respectively, to accommodate the presence of the radioactive fission products and transuranic products and of the heat generated when their radiations are stopped.

H. Interim Spent-Fuel Storage

In supporting the fission chain reaction for several years, the fuel builds up a substantial inventory of radioactive fission products, which are a source of both radiation and heat. The fuel assemblies are stored in water basins and allowed to "cool" for a period of time, which may be a short as six months (or may be indefinite in the open fuel cycle where reprocessing and final waste disposal are not implemented).

Water is an ideal storage medium, being clear for viewing purposes, a liquid for "crack-free" shielding, and able to remove reasonably large heat loads by natural convection.

The open fuel cycle in the United States, with its prospect of exceeding initially built-in fuel-storage capacities, has prompted plans for high-density storage in existing facilities, construction of away-from-reactor storage pools, and various dry storage concepts. Other countries, even those such as France and the United Kingdom, which reprocess spent fuel, also have varying needs for wet or dry off-site storage facilities.

I. Reprocessing

Spent fuel discharged from a power reactor contains residual ^{235}U and converted plutonium, as well as fission-product and transuranic wastes. These constituents are

separated from each other in the spent-fuel processing or reprocessing step of the fuel cycle. Facilities used for this purpose are characterized by thick, concrete-wall and other shielding and by extensive remote operations.

Spent fuel is stored on site in a pool similar to that used for interim storage at a reactor site. The fuel is then moved remotely into a disassembly area, where it is cut or chopped into short segments. The small fuel pieces are dissolved in strong acid, leaving the cladding hulls behind while placing the heavy metals and wastes into solution.

The usual process for spent-fuel separation relies on solvent extraction of heavy metals from the radioactive waste products and then of the uranium and plutonium from each other. The liquid wasters are sotred in large double-walled steel tanks prior to solidification, which may occur at about five years after initial separation. The uranium and plutonium may be stored or recycled (as described separately in the next section).

J. Waste Management

Each step in the nuclear fuel cycle, even including waste management, generates some radioactive wastes.

The three principal waste handling methods have acquired the following nicknames: (1) delay and decay, (2) dilute and disperse, (3) concentrate and contain.

The first two methods, often used together, rely on holding the waste until natural radioactive decay processes reduce its potential hazard to the point where it can be diluted and released "safely" (i.e., consistent with applicable laws or regulations) into the atmosphere or a body of water. Many of the liquid and gaseous wastes from reactors and fuel cycle plants can be treated in this manner.

The third method immobilizes longer-lived wastes to reduce the risk of their accidental dispersal. Front-end fuel-cycle steps and reactor operation produce "low-level" wastes (LLW), which can be handled by near-surface burial in much the same manner as common societal wastes of other types.

Reprocessing gives rise to "high-level wastes" (HLW), which are a combination of fission products and transuranic elements. These wastes may be solidified into a calcined or glasslike form and then placed in retrievable storage or disposed.

High-level wastes [as well as intermediate-level wastes (ILW), which are essentially everything that is not LLW or HLW] may be stored retrievably in water basins, dry structures, and open mine tunnels. Disposal may be accomplished in a back-filled mined facility of salt, granite, basalt, volcanic tuff, or other geological formation. Another potential site would be an ocean-bed location selected for chemically inert sediments with exceptionally low current, resource content, and seismic activity.

IV. RECYCLE

Spent fuel discharged from light-water reactors contains ^{235}U and plutonium, which can be reintroduced into the fuel cycle or recycled for additional energy production. Use of the uranium can reduce mining requirements by about 16% and enrichment requirements by a few percent (since its enrichment at discharge is only slightly above that of natural uranium). Plutonium is estimated to reduce yellowcake and enrichment needs by 15% and 18%, respectively. Thus, overall nearly one-third of the mining and one-fourth of enrichment could be saved by recycle. Typical mass flows for LWR uranium and plutonium recycle shown in Fig. 8 may be compared to those for the nonrecycle case in Fig. 2.

Uranium recycle would be complicated by the presence of the isotope ^{236}U created during fuel burnup by nonfission absorption of neutrons in ^{235}U. This isotope, which is present only in very small quantities in natural uranium, tends to be separated with the ^{235}U in the UF_6-based enrichment processes and thus tends to dilute the product as it is separated from the ^{238}U. Dedicated facilities, e.g., gas centrifuge, may be used for such separations. Laser enrichment separation, being independent of isotope mass, would not be subject to such limitation.

Plutonium is recycled in light-water reactors in the form of mixed oxide, PuO_2 and UO_2, also known as MOX. The PuO_2 may be mixed with depleted UO_2 (i.e., as made from the uranium tails product from the enrichment step with 0.2–0.35 wt.% ^{235}U) to produce separate fuel pins or fuel assemblies. Alternatively, the PuO_2 may be mixed with slightly enriched UO_2. In either case, the average fissile

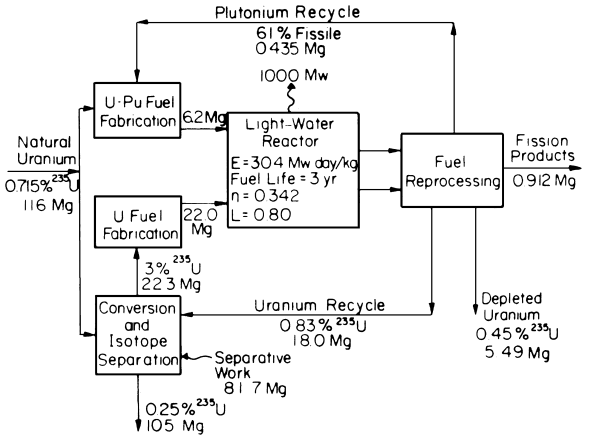

FIGURE 8 Nuclear fuel cycle material flowsheet for a typical pressurized-water reactor (PWR) using self-generated uranium and plutonium recycle. [From Pigford, T. H. (1978). *In* Report to the APS by the Study Group on Nuclear Fuel Cycles and Waste Management, Part II. *Rev. Mod. Phys.* **50**(1).]

fraction of the fuel would be about 3–5 wt.%, similar to the fraction that would be used in an all-uranium reload fuel batch.

Recycle core characteristics are of two basic types. In self-generated recycle, each reactor would use mixed oxide only in the amount it produces itself (e.g., as shown by Fig. 8). Open-market recycle allows the plutonium to be collected from several reactors and thereby used in a given reactor with fissile loadings anywhere from zero to 100% plutonium.

France has a major program to use MOX fuel in a selected subset of its PWRs. Japanese plans to use MOX are uncertain in the aftermath of an accident at Tokaimura (see also Section IX.C) and quality problems. (Unique MOX application in the United States and Russia are noted in Section VIII.)

V. ALTERNATIVE URANIUM FUEL CYCLES

Variations on the light-water reactor uranium fuel cycle are found for systems fueled with natural uranium or highly enriched uranium. Natural uranium, used to fuel Canadian deuterium–uranium (CANDU) pressurized heavy-water reactors (PHWRs) and a variety of early gas-cooled reactors, does not require enrichment. It would be reprocessed only for plutonium, since the residual uranium enrichment would likely be nearly that of depleted uranium. Typical mass flows for the CANDU fuel cycle without reprocessing are provided in Fig. 9. The former Soviet pressure-tube graphite reactors (PTGR), using uranium fuel enriched to slightly less than 2 wt.% ^{235}U, are likely to have material flows intermediate to those of the CANDU and LWR designs.

More highly enriched uranium fuel is used at about 20 wt.% in some research reactor designs and at 93 wt.% or greater in high-temperature gas-cooled reactors (HTGRs), research reactors, and military propulsion reactors. At the upper enrichment values, 3000 or more stages in gaseous diffusion enrichment may be required.

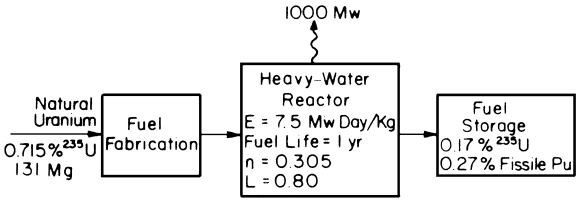

FIGURE 9 Nuclear fuel cycle material flowsheet for a typical CANDU pressurized heavy-water reactor (PHWR) without fuel recycle. [From Pigford, T. H. (1978). *In* Report to the APS by the Study Group on Nuclear Fuel Cycles and Waste Management, Part II. *Rev. Mod. Phys.* **50**(1).]

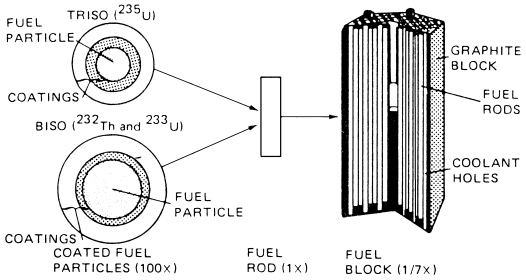

FIGURE 10 Fuel for a high-temperature gas-cooled reactor (HTGR). [Adapted courtesy of General Atomic Corporation.]

The HTGR uses a fuel concept that is very different from that considered to this point. It consists of a very small spherical kernal of uranium carbide (UC) surrounded by layers of graphite and silicon carbide, as shown by Fig. 10. These microspheres are mixed with others made of thorium carbide (ThC) to a fissile equivalent of about 5 wt.%. The fuel particles are then mixed with a carbon binder to form finger-sized fuel sticks (Fig. 10) or baseball-sized spheres. In one type of HTGR, fuel sticks are loaded into hexagonal graphite fuel assembly blocks (Fig. 10), which then are stacked to form a reactor core that is loaded or unloaded with the system shutdown. A different design, the thorium high-temperature reactor (THTR), uses the large spheres, which are placed in a hopper to form a core that can be fueled and defueled, respectively, through on-line addition or removal of the spheres.

Reprocessing of HTGR fuel would be primarily for the uranium (^{235}U and, as considered further below, ^{233}U) content, since little plutonium would be produced (recalling that only <7 wt.% of the fuel would be ^{238}U). Since after a typical 4-year HTGR fueling cycle the ^{236}U content exceeds that of the ^{235}U, recycle might not be used at all (unless laser methods are available).

VI. PLUTONIUM FUEL CYCLE

The liquid-metal fast breeder reactor (LMFBR) concept relies on plutonium fuel and ^{238}U (depleted uranium) for breeding of additional plutonium in amounts that exceed what is "burned" for power production. Since plutonium does not exist naturally, it must be produced initially in a uranium fuel cycle.

The LMFBR fuel cycle uses small-diameter mixed-oxide (PuO_2 and depleted UO_2) fuel pellets in stainless-steel cladding formed into hexagonal fuel assemblies. The central core of mixed oxide is surrounded by a depleted uranium blanket to capture neutrons that would otherwise leak out and to use them to convert ^{238}U to plutonium. The blanket above the core is formed by pellets in the same

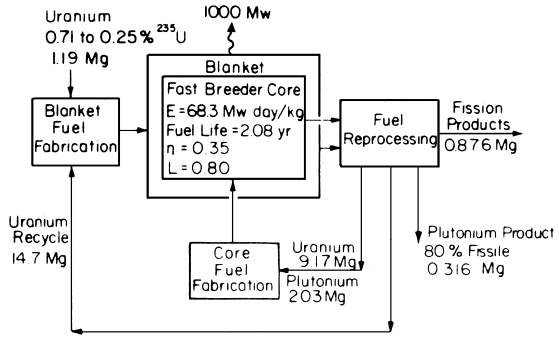

FIGURE 11 Nuclear fuel cycle material flowsheet for a typical liquid metal fast breeder reactor (LMFBR). [From Pigford, T. H. (1978). *In* Report to the APS by the Study Group on Nuclear Fuel Cycles and Waste Management, Part II. *Rev. Mod. Phys.* **50**(1).]

cladding tubes as the core fuel. The surrounding blanket consists of separate fuel bundles. Typical LMFBR mass flows are provided in Fig. 11. Reprocessing is similahT that for the LWR with the chemistry adjusted to accommodate composition differences.

VII. THORIUM FUEL CYCLE

The introduction of thorium into reactor fuel allows fissile ^{233}U to be produced by neutron bombardment of ^{232}Th. As indicated by Fig. 1, thorium is mined, milled, and fabricated into fuel assemblies.

Thorium fabrication may be into pellets and fuel pins or, in the case of the HTGR, microspheres. Reprocessing separates ^{233}U from thorium and wastes. For the HTGR, ^{235}U is also separated from ^{233}U as a result of unique features of the separate ^{235}U and thorium microspheres.

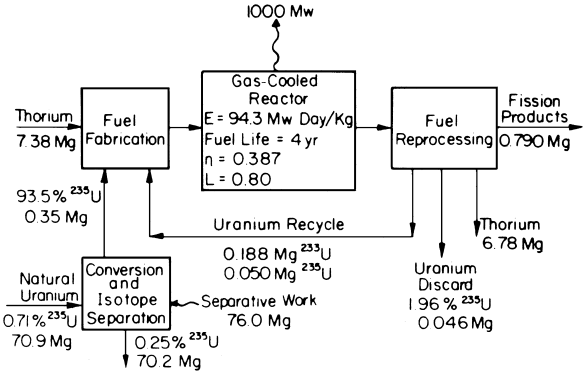

FIGURE 12 Nuclear fuel cycle material flowsheet for a typical high-temperature gas-cooled reactor (HTGR) fueled with ^{235}U, thorium, and recycled uranium. [From Pigford, T. H. (1978). *In* Report to the APS by the Study Group on Nuclear Fuel Cycles and Waste Management, Part II. *Rev. Mod. Phys.* **50**(1).]

Typical mass flows for the HTGR thorium and uranium fuel cycle are provided in Fig. 12.

VIII. OTHER FUEL CYCLES

A large number of variations are possible for the nuclear fuel cycles described above. Major possibilities are to add plutonium, thorium, or both to the fuel for a specific reactor type.

Symbiotic or cross-progeny fuel cycles interchange fuel materials among two or more reactor types. One possibility is exchange of LWR plutonium with that produced in an LMFBR: a procedure that, based on underlying theoretical considerations, turns out to be beneficial to the efficiency with which each system can support the fission chain reaction.

In the aftermath of the "cold war," two unique fuel-cycle options for former nuclear-weapons materials have evolved. High-enrichment uranium from Russia has been down-blended to low-enrichment uranium (e.g., for use in light-water or light-water graphite reactors) in the cascades of U.S. gaseous-diffusion enrichment plants. Then, plans have been developed to convert weapon-grade plutonium (nominally $\geq$95 wt% ^{239}Pu) into mixed-oxide (i.e., MOX) fuel to be burned in one or more U.S. commercial light-water reactor, or possibly a Canadian heavy-water reactor. Russia may do the same in its VVER or RBMK reactors.

IX. SUPPORT ACTIVITIES

The nuclear fuel cycle steps shown by Fig. 1 are supported by transportation, radiation safety, criticality safety, and material safeguards activities. The combination of the two safety disciplines is often referred to as *nuclear safety*.

A. Transportation

Each fuel cycle step has associated transportation activities. Shipping methods are determined by a combination of economic considerations and safety concerns from chemistry, radiation, and potential criticality. (The latter is considered separately in Section IX.C.)

Uranium mines and mills are often located close to each other so that the ore may be carried between the two in open trucks. Yellowcake product is packaged into 55-gal drums, which are transported by truck. The high value of the product and related potential for damage in an accident are the key concerns for yellowcake and the other front-end products.

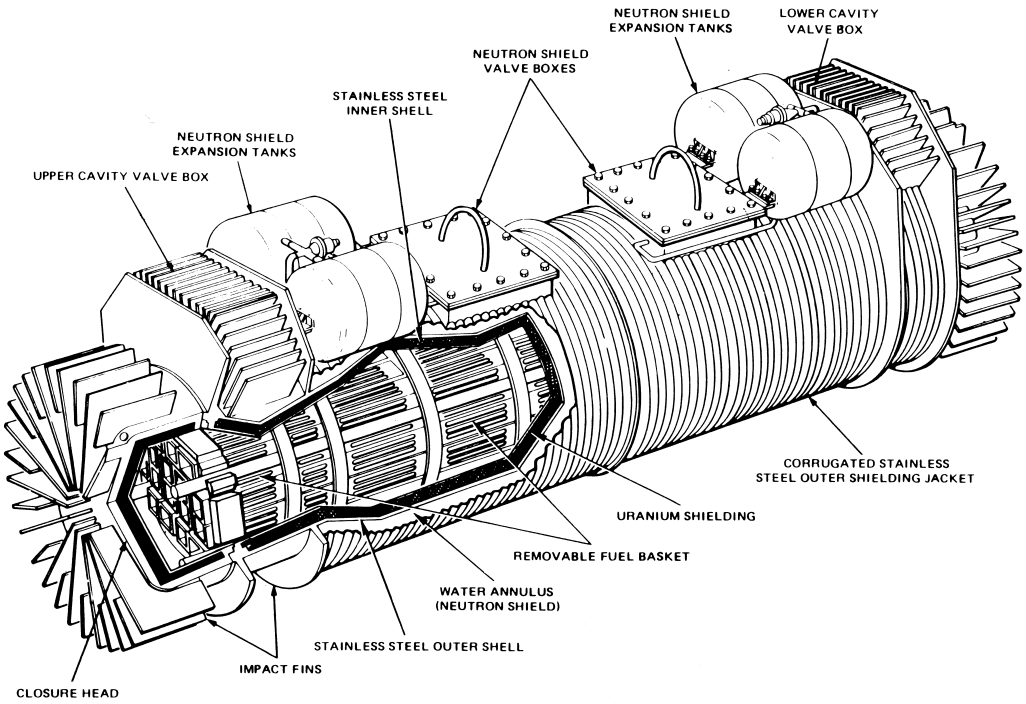

FIGURE 13 Shipping cask for spent light-water reactor (LWR) fuel assemblies. [Courtesy of General Electric Company.]

Uranium hexafluoride is highly corrosive and is thus shipped in strong pressure-vessel containers. If UF_6 is converted to UO_2 powder at a dedicated facility, the product is sealed in water-tight cans and shipped in a strong cask. Finished fuel assemblies are transported to reactor sites in shock-mounted casks.

Spent fuel and wastes are transported with significant attention to radiation and the related heat load. Spent fuel is moved from the reactor to the fuel pool under water. Shipping casks for spent-fuel assemblies (such as shown by Fig. 13) and solidified-waste canisters are designed to provide shielding and cooling under both normal and postulated accident conditions. Separated plutonium also is shipped in rugged, accidentresistant containers due to its chemical and radiological toxicity.

B. Radiation Safety

Radiation safety, also referred to variously as radiological controls or health physics, deals with protection of operating personnel and the public from potential adverse effects of radiation.

Radiation safety includes facility, equipment, and procedure development to minimize direct radiation exposures and skin contamination or inhalation of radioactive material. It is supported by routine radiation surveys, dose measurements, and audits. Extensive prejob planning is implemented to keep personnel radiation exposures *as low as reasonably achievable* (ALARA), for example, as may be required by government regulations.

Operations with toxic materials that emit little or no electromagnetic (gamma) radiation may be conducted in leak-tight glove boxes. Fabrication of plutonium pellets and fuel pins falls into this category.

Materials that emit penetrating radiation may require shielding up to and including that requiring remote handling. Operations behind shielding may be viewed by television or through thick-leaded glass windows. Fabrication of ^{233}U fuels and all reprocessing and high-level waste management activities are conducted remotely.

C. Criticality Safety

Nuclear criticality safety deals with prevention of nuclear excursions (i.e., uncontrolled neutron chain reactions) in fuel materials outside of reactors. Since natural uranium is not subject to accidental criticality, enriched uranium is the first fuel-cycle product (e.g., from Fig. 1) that requires special attention.

Criticality safety in general relies on some combination of limiting fuel quantities, using neutron-absorbing constituents, and applying geometrical arrangements that favor neutron leakage. The latter depends on use of geometrically favorable shapes (e.g., long, slender cylinders and thin slabs) augmented by limiting neutron-reflecting materials and by generous spacing of components.

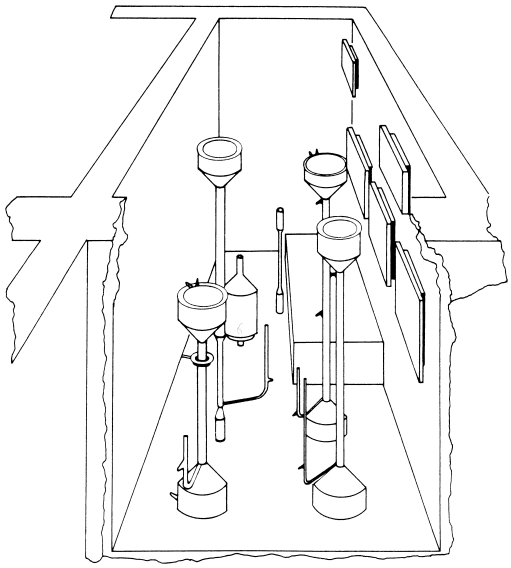

FIGURE 14 Arrangement of a plutonium processing cell at Allied-General Nuclear Services' Barnwell reprocessing plant. [Knief, R. A. (1992). "Nuclear Engineering: Theory and Technology of Commercial Nuclear Power," 2nd ed., Taylor & Francis/Hemisphere, New York.]

Examples of criticality safety applications include UF_6 shipping containers of successively smaller volume with increasing enrichment, UO_2 pellet furnaces that hold only trays of limited height, boric acid neutron poison for close-packed water storage of spent fuel assemblies, and thin cylindrical solvent-extraction columns for purification of reprocessed plutonium. Sizes and limits are established to accommodate both normal and postulated abnormal (e.g., double batching) and accident (e.g., cask rupture and water flooding) conditions.

The reprocessing plant cell in Fig. 14 presents an example of several criticality safety measures for plutonium solution. The process columns have a small diameter and thin annular headers. The product storage tanks along the right wall are based on a thin slab geometry. The large-volume reagent tank in the back of the cell are packed with neutron-poison glass rings in case the product solution were to enter accidentally.

A process criticality accident at Tokaimura, Japan, in September 1999 focused world attention on safety aspects of the nuclear fuel cycle. The accident occurred when enriched uranium solution was processed in a manner that bypassed both favorable geometry equipment and approved procedures, with a resulting uncontrolled fission chain reaction that produced high radiation levels that proved lethal to one worker, caused serious radiation illness to two other workers, and otherwise overexposed a number of others. Overall, process criticality accidents have been reported in the United States (7), United Kingdom (1), former Soviet Union/Russia (13), and, now, Japan (1).

D. Material Safeguards

Nuclear material safeguards are those measures designed to deter, prevent, delay, detect, and report actions aimed at theft or sabotage of fuel or facilities. This is based on the potential use of fissile materials in nuclear explosives or for radiation threats.

Physical security, material control, and accountancy systems are designed to counter the terrorist threat from a subnational group. International safeguards use multinational agreements and inventory verification to deter *proliferation*, that is, diversion by a nation for the purpose of developing nuclear weapons capability.

Measures should be commensurate with the perceived risks for given materials. The slightly enriched uranium of the LWR fuel cycle, for example, requires further enrichment for weapons use. The extreme complexity of the technology for uranium enrichment makes such clandestine operations unlikely.

Spent fuel with its plutonium content that could be separated chemically is a somewhat more attractive target. However, the inherent radiation levels of the wastes and toxicity of the plutonium require sophisticated reprocessing operations.

Highly enriched uranium (>20 wt.% ^{235}U) and separated ^{233}U and plutonium are the most attractive targets for all groups. Thus, the most stringent safeguards measures are applied to the applicable portions of the fuel cycle.

SEE ALSO THE FOLLOWING ARTICLES

DOSIMETRY • FISSION REACTOR PHYSICS • FUEL CHEMISTRY • HEALTH PHYSICS • MINING ENGINEERING • NUCLEAR CHEMISTRY • NUCLEAR POWER REACTORS • NUCLEAR REACTOR MATERIALS AND FUELS • NUCLEAR REACTOR THEORY • NUCLEAR SAFEGUARDS • RADIATION SHIELDING AND PROTECTION • RADIOACTIVE WASTES • RADIOACTIVITY • URANIUM

BIBLIOGRAPHY

Bebbington, W. P. (1976). The reprocessing of nuclear fuels. *Sci. Am.* **235**(6), 30–41.

Benedict, M., Pigford, T. H., and Levy, H. W. (1981). "Nuclear Chemical Engineering," 2nd ed. McGraw-Hill, New York.

Cochran, R. G., and Tsoulfanidis, N. (2000). "The Nuclear Fuel Cycle—Analysis and Management," 2nd ed., American Nuclear Society, La Grange Park, IL.

Knief, R. A. (1992). "Nuclear Engineering: Theory and Technology of

Commercial Nuclear Power," 2nd ed., Taylor & Francis/Hemisphere, New York.
Knief, R. A. (1985). "Nuclear Criticality Safety: Theory and Practice," American Nuclear Society, La Grange Park, IL.
Lawrence Livermore National Laboratory (1984). Laser applications: Isotope separation. Livermore, California.
Los Alamos National Laboratory (2000). A Review of Criticality Accidents, LA-13638, April.
Marshall, W. (ed.) (1983). "Nuclear Power Technology," Volumes 1, 2, and 3. Clarendon Press, Oxford, England.
Murray, R. L. (1994). "Understanding Nuclear Waste," 4th ed., Battelle Press, Columbus, OH.
Olander, D. R. (1978). "The gas centrifuge," *Sci. Am.* **239**(2), 37–43.
Nuclear Engineering International. [Published monthly in the United Kingdom.]
Rahn, F. J., *et al.* (1984). "A Guide to Nuclear Power Technology," Wiley-Interscience, New York.
"Report to the APS by the Study Group on Nuclear Fuel Cycles and Waste Management, Part II" (1978). *Rev. Mod. Phys.* **50**(1), S1–S186.]
Wymer, R. G., and Vondra, B. L., Jr. (1981). "Light Water Reactor Nuclear Fuel Cycle," CRC, Boca Raton, FL.
Zare, R. N. (1977). "Laser separation of isotopes," *Sci. Am.* **236**(2), 86–98.



Nuclear Fusion Power

M. R. Gordinier
J. W. Davis
McDonnell Douglas Astronautics Company (now The Boeing Company)

F. R. Scott
Electric Power Research Institute

K. R. Schultz
General Atomics

I. Scientific and Technical Foundation of Fusion Power
II. Specific Nuclear Fusion Power Systems
III. General Technological Issues
IV. Present Status
V. Summary

GLOSSARY

Beta value Ratio of pressure exerted by the plasma to the pressure created by magnetic fields.
Blanket Region surrounding a fusion power plant core within which the fusion-born neutrons are slowed down, heat is transferred to a coolant, and tritium is bred from lithium.
Confinement, inertial Use of inertia to impede the escape of hot fusion plasma.
Confinement, magnetic Use of intense magnetic fields to contain plasma.
Diffusion Random process by which particles and energy leak out of a plasma; for example, leakage of plasma across magnetic field lines due to collisions.
Energy balance Balance achieved by equating the energy put into the plasma with the energy lost from the plasma via radiation, diffusion, and so on.
Energy confinement time Characteristic time a quantity of energy remains within the plasma before leaking out.
First wall First physical boundary facing the plasma.
Fusion Process in which very light nuclei, heated to extreme temperatures, fuse together, releasing energy in the form of energetic reaction products.
Ignition temperature Fuel temperature at which the energy deposited in the plasma due to fusion events balances the total energy lost from the plasma.
ITER International Thermonuclear Experimental Reactor. An international project, originally with the USA, Russia, Japan and the European community (now continuing without the USA) to design an experimental fusion reactor.
JET tokamak Joint European Torus, a large tokamak owned by the European Union and located at Culham Laboratory in England.

Magnetic mirror Magnetic field, generally axial with local regions of increased intensity, capable of trapping and confining plasma.

Magnetohydrodynamics Science dealing with the behavior of electrically conducting fluids immersed in electric and magnetic fields.

Minimum-B configurations Name given to a magnetic field topology in which the magnetic field strength increases in every direction away from the center. Confined plasma thus finds itself trapped in a minimum magnetic potential well.

Neutron wall loading Energy flux carried by the fusion neutrons, which impacts the first physical boundary facing the plasma, usually expressed in megawatts per square meter.

Plasma Collection of free electrons and positive ions that exhibits strong electromagnetic and collective behavior; sometimes called the fourth state of matter.

Plasma containment Operation intended to isolate the burning plasma from the walls of the plasma chamber. The goal of containment is to confine the plasma for a time sufficiently long that net energy can be released.

Radio-frequency (rf) heating Process of heating a plasma based on a resonant transfer of power from electromagnetic waves to gyrating ions and electrons.

Superconductor Conductor of electricity that has the property of zero electrical resistance at cryogenic temperatures.

Tokamak Toroidal magnetic confinement concept in which confining helical magnetic field lines are produced by the combination of a toroidal field created by magnets and a poloidal field resulting from currents flowing toroidally in the plasma.

Tokamak Fusion Test Reactor (TFTR) Fusion experiment (now shut down) located at Princeton in the United States.

Wall loading Fusion reactor thermal output power divided by the area of the wall facing it. Usually expressed as the number of watts per unit area.

NUCLEAR FUSION is the process that powers the sun and the stars. Atoms of light elements, such as hydrogen, are squeezed together under high pressure at high temperature until two atoms are in close enough proximity that the natural repulsion of the two nuclei is overcome and the two atoms join together or "fuse" to form a new, heavier atom. The mass of the new atom is slightly less than the sum of the masses of the two initial atoms. The difference in mass appears as energy, following Einstein's famous equation $E = mC^2$. This energy could be used to generate electrical power for the benefit of humankind.

I. SCIENTIFIC AND TECHNICAL FOUNDATION OF FUSION POWER

A. Introduction

The importance of secure and abundant energy sources has been underscored by a variety of political and economic events. Faced with diminishing supplies of fossil fuels and recognizing the environmental consequences of their use, the world's scientific and engineering communities have focused on striving to develop several virtually inexhaustible power sources, one of which is nuclear fusion. A fusion reaction consists of joining together light ions such as deuterium (an isotope of hydrogen), leading to a net release of energy. The abundance of deuterium in the oceans of the world and its low cost of extraction makes fusion power a leading candidate in the quest for limitless sources of energy. The case for fusion can be made with simple arguments, one of the most compelling from an analysis of the world's remaining fossil fuel reserves.

The world currently relies primarily on fossil fuels for our energy supply. The amount of proven reserves of these fuels grows as we search harder for oil and gas deposits—and as the price of these resources goes up. Nevertheless, it is clear that our fossil resources are finite, as shown in Table I, and will one day be depleted. For the long term, the human race will need to rely upon nuclear energy—fission and fusion—for much of our energy needs. The ultimate reserves of energy in the form of deuterium in the water of the seas would provide a virtually limitless supply of energy if it were used in nuclear fusion power plants. A full coverage of energy uses and energy supplies is available in the sections on Energy Efficiency and Energy Flows. As Table I shows, the potential supply of energy from fusion is orders of magnitude larger than those from other sources.

The potential benefits of a nuclear fusion energy economy are many: (1) an inexhaustible supply of cheap fuel; (2) no chemical combustion products as effluents; (3) fuel supplies that cannot be interrupted by foreign nations; (4) multiple uses, including the generation of electricity, hydrogen, synthetic, and fissile fuels; and (5) lower levels of radioactive hazards and waste.

TABLE I Energy Inventories

World energy resources annual use 0.3 Q/year	
Oil	13 (~50 years)
Fossil	80 (~270 years)
Uranium	9000 (~30,000 years)
Deuterium	1.6×10^7 (~5×10^7 years)
In units of Q or 10^{18} BTU	

Other benefits may accrue to a society that pursues fusion power, including whole new technologies, advanced materials, and other spin-offs. Who would have or could have predicted the numerous applications of space technology in everyday life and commerce? Cheap microelectronics, new medical diagnostic techniques, and advanced computer architectures all had their roots in the seemingly narrow goal of putting a man on the moon. The quest for fusion power involves many scientific, engineering, and computer disciplines and the spin-offs resulting from this research, such as plasma lamps and advanced lasers, are already bringing benefit.

The harnessing of controlled nuclear fusion power is truly an international effort, with over 6000 scientific and engineering professionals currently engaged in research in the four major programs of the world (U.S., Japan, European Union, and Russia). In addition, there are smaller programs in Canada, Korea, and many other countries around the world. Nearly 2 billion dollars was spent on fusion research worldwide in 2000 with the United States spending approximately 0.7 billion.

Fusion has been studied since the 1950s, more than 40 years, and has had the dubious distinction of always being "just 20 years away." In fact, in the past decade, understanding of the physics of fusion has advanced significantly. A firm basis now exists to construct experiments that will produce significantly more energy than was used to heat the fuel to fusion conditions and conclusively demonstrate the scientific feasibility of fusion. This will pave the way for the technology development necessary for fusion to become a practical energy source.

B. The Physics of Fusion

The energy liberated during a fusion reaction is due to the conversion of mass into energy according to the familiar Einstein relation $E = mC^2$. As an example, consider the fusion reaction between deuterium (D) and tritium (T), two isotopes of hydrogen:

$$\mathrm{D} + \mathrm{T} \rightarrow {}^4\mathrm{He} + \mathrm{n} + 17.6\ \mathrm{MeV},$$

in which a helium ion (^{4}He) and a neutron (n) are created.

The mass of the initial reacting ions exceeds the combined mass of the reaction products by 0.01888 atomic mass units (amu), which is equivalent to a mass decrease of only 0.4%.

D:	2.01355	^{4}He:	4.00150
T:	3.01550	n:	1.00867
	5.02905		5.01017

This "missing mass" has been converted into the kinetic energy of the helium ion (3.52 MeV) and the neutron (14.1 MeV), resulting in the generation of 17.6 MeV/DT fusion reaction (1 MeV $= 10^6$ eV $= 1.6 \times 10^{-13}$ J).

The energy associated with such small changes in mass is extraordinary, making the energy stores in even a small quantity of fusion fuel comparable to much larger amounts of conventional fossil fuels. One out of every 6500 hydrogen atoms is a deuterium atom. If the deuterons in a 12-oz glass of water could be made to fuse and release their energy, the yield would be equivalent to 30 gal of gasoline or 360 lbs of coal. The energy released by fusing 1 ton of deuterium is equivalent to burning over 10 million tons of coal!

How is this energy to be converted into electricity or other useful products? Figure 1 is a schematic of the power extraction process for a generic fusion power plant. The energetic neutrons born from the DT reaction leave the plasma and interact with the "blanket" surrounding the plasma chamber. This region is devoted to extracting the neutrons' energy in the form of heat generated by collisions with the atoms comprising the blanket material. Coolant forced through the blanket region removes the heat which is used to power turbines, generating electricity. In addition, the neutrons interact with lithium atoms in the blanket, breeding more tritium fuel. Tritium must be bred, since it does not occur in nature in any abundance. Outside of the blanket region is the shield which serves to attenuate the neutron flux, reducing the neutron interactions with the structural components of the power plant. The specifics of each of these functions will be examined in Section III.

The generation of fusion power depends upon achieving the following three requirements: (1) high fuel temperatures, (2) sufficient fuel densities, and (3) good fuel energy confinement times.

For two positively charged ions to fuse, they must be brought together at high speed so that the electrostatic Coulomb repulsion between them can be overcome. The probability of a fusion reaction occurring is related to the reaction's cross section, which is a function of the relative velocity of the fuel ions. These cross sections become appreciable when the fuel temperature is on the order of 100,000,000 K or, in the more customary units, 10 keV (1 keV $= 10^3$ eV).

One consequence of such extremely hot fuel is that it no longer takes the form of a neutral gas. Instead, it has become a collection of free ions and electrons. This "fourth state of matter," called a plasma, comprises approximately 99% of the known universe. Only in very cold and isolated locations in the universe, like on the earth, do the other three more common states of matter appear. A familiar example of the plasma state is the ionized gas in neon signs and fluorescent light bulbs.

Even at elevated temperatures, the fusion of nuclei is a rare event, since most of the interactions between fuel ions

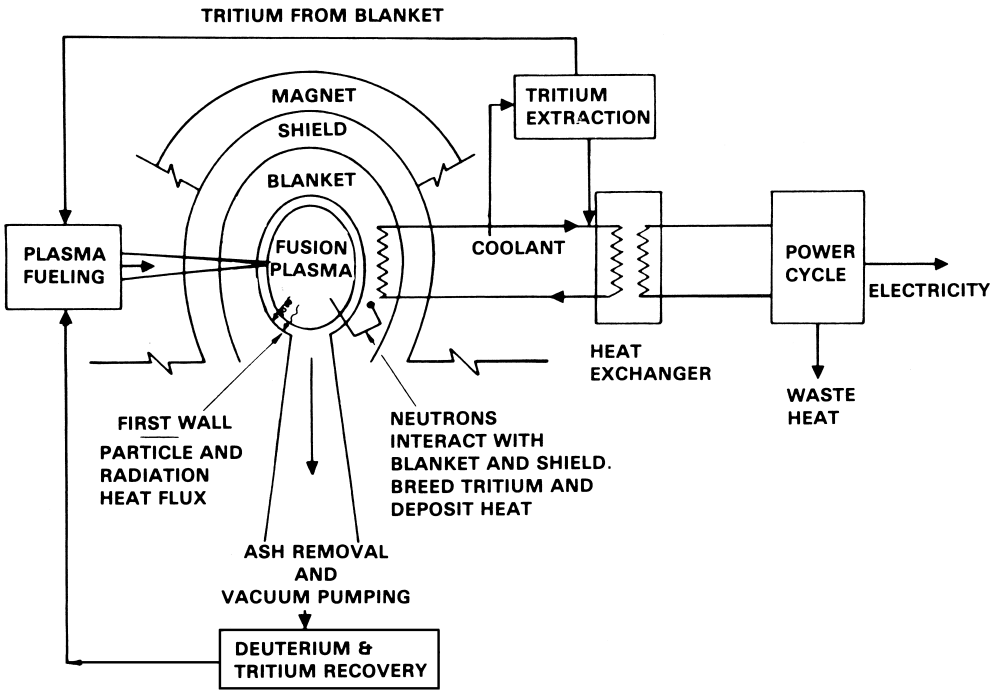

FIGURE 1 Typical energy conversion system.

are predominantly repulsive (Coulomb) scattering collisions. At 10 keV, for each fusion reaction that takes place, over 1 million scattering reactions occur. This observation has an important implication: Since fusion reactions are so rare, the reacting plasma must be confined for a long enough time for the energy released by these infrequent fusion reactions to exceed by a wide margin the energy invested in getting the plasma hot enough to burn. Simple economics forces the fusion power plant designer to conceive of devices that have excellent plasma confinement properties at the densities and temperatures required to burn thermonuclear fuel.

Several approaches are known and are currently under investigation that can, in principle, form the basis for a viable fusion power plant. These approaches can be divided into two distinct classes: magnetic confinement schemes and inertial confinement schemes. Gravitational confinement, used with great success in the sun and other stars, requires huge masses and volumes and is not a viable approach on earth.

1. Magnetic Confinement

One way of confining the hot fusion fuel is in a "magnetic bottle," since the motion of charged electrons and ions can be influenced by magnetic fields. The force **F** acting on a charged particle in a magnetic field **B** is called the Lorentz force and is given by the expression

$$\mathbf{F} = q(\mathbf{v} \times \mathbf{B}), \tag{1}$$

where q and $\mathbf{v}$ represent the charge and velocity of the particle, respectively. This force causes electrons and ions to spiral around magnetic lines, creating a helical trajectory (Fig. 2). The radius of the helix is called the Larmor radius ρ_l and is a function of the particles' charge q, mass m, perpendicular velocity $v_\perp$, and the applied magnetic field $\boldsymbol{B}$:

$$\rho_l = mv_\perp / q\boldsymbol{B}. \tag{2}$$

If the hot plasma came into contact with the material walls of the reactor, it would immediately cool to a temperatures

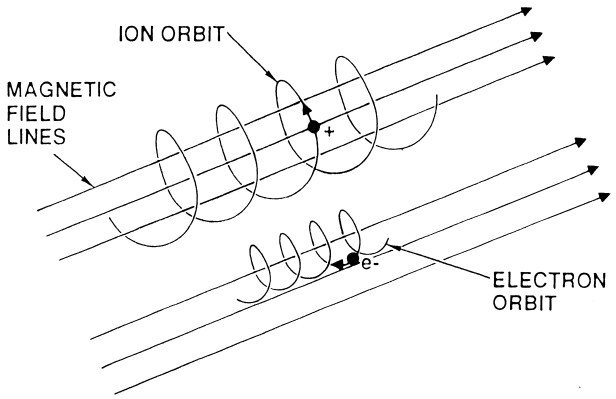

FIGURE 2 Particle motion in magnetic fields.

below that required to sustain the plasma burn. Isolating the plasma from the walls can be accomplished if the ratio of the Larmor radius to the plasma radius is quite small. This can be achieved by large values of magnetic field.

Particles can, however, leak out of the confining magnetic field due to random-walk Coulomb collisions. The leakage rate is proportional to the square of the Larmor radius. Thus, intense magnetic fields might be able to isolate the hot plasma from the walls of the reactor and inhibit the diffusion of particles and energy out of the plasma due to collisions. Diffusion can also result from collective particle drifts driven by inhomogeneities in magnetic and electric fields.

While many different magnetic confinement systems are known, they can all be classified as either open or closed. In an open system (Fig. 3b), plasma trapped by the magnetic field literally bounces back and forth between the current-carrying coils that produce the magnetic field, causing such devices to be known as magnetic mirrors. However, the particles whose velocities are parallel to the axis of the mirror are free to stream out of the device. While attractive because of its simplicity, the magnetic mirror does not appear able to achieve adequate plasma confinement to make an energy-producing power plant. Application as a driven plasma source of neutrons may be possible. A cure of such axial losses is achieved by bending the magnetic field lines into a torus (Fig. 3a). Such schemes are called closed systems because the plasma can escape only across field lines, a more difficult feat than escaping along field lines. The leading candidate in this class, the tokamak, is the best-performing magnetic confinement device to date. The detailed operation of tokamaks will be explored in Section II. Other promising but less developed concepts are outlined in Table II.

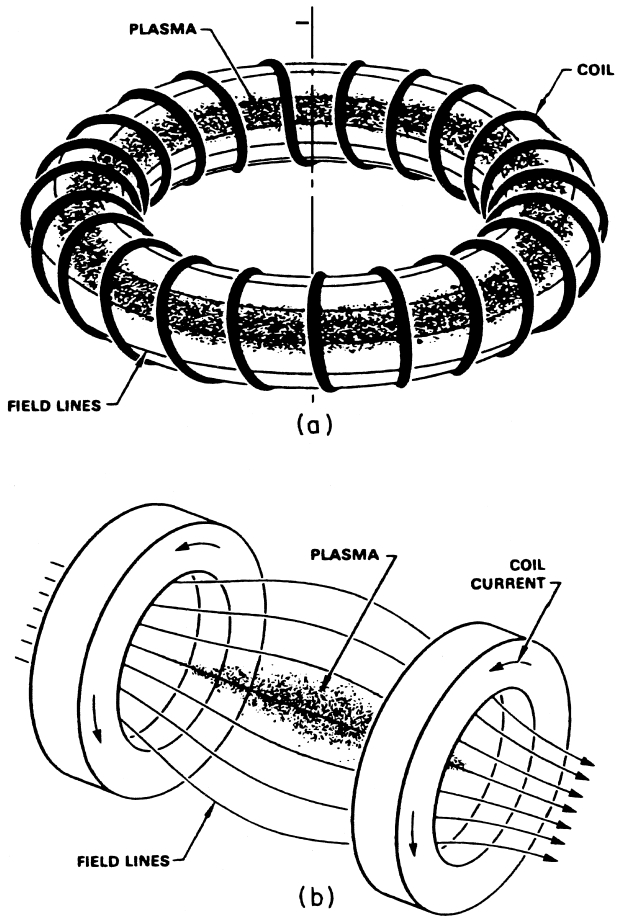

FIGURE 3 Examples of (a) closed and (b) open magnetic confinement systems.

2. Inertial Confinement

Another approach to holding the fusion fuel together long enough for adequate energy release to occur is called inertial confinement. If a solid pellet of fusion fuel is heated with an intense laser or particle beam, the surface of the pellet heats and ablates rapidly. This rapid ablation (evaporation) of the pellet surface generates, via the rocket effect, a strong pressure wave that propagates from the pellet surface to the pellet core. Rapid compression of the fuel at the core causes temperatures there to rise rapidly. If the energy released by the resulting fusion reactions can be deposited within the pellet, the pellet core can be ignited, causing a burn wave to propagate throughout the pellet, releasing more fusion energy. The confinement of the burning plasma is accomplished by counteracting the outward expansion of the burning pellet core with the inward inertia of the pellet's compressed shell. A schematic of the inertial confinement process is shown in Fig. 4. The issues confronting this approach to controlled fusion are (1) developing a pellet driver (laser, particle beam) that efficiently converts electrical power into power on target, (2) focusing prodigious amounts of energy onto the pellet for a very short time, (3) effectively coupling this energy into the shell of the pellet, (4) achieving large pellet compressions, (5) designing efficient pellet geometries, and (6) achieving sufficiently high microexplosion repetition rates.

Whether magnetic or inertial fusion power will ultimately lead to a successful power plant is not known at this time since no one can predict with any degree of accuracy which confinement approach will lead to the best, most economical reactor. Several schemes are being pursued in parallel as insurance against failure along any one path.

Before the details of the physics, engineering, and technology issues associated with these approaches to controlled fusion power are considered, the gross features of the thermonuclear environment will be examined.

TABLE II Alternate Approaches to Magnetic Confinement Fusion

Device	Type	Description
Stellarator	Closed, toroidal	Steady-state device in which helical field lines are created not by plasma currents but by external helical magnetic windings
Reversed field pinch	Closed, toroidal	Device that has a null in its toroidal magnetic field near the plasma edge, enabling very large current densities to flow that may ohmically ignite the plasma
Field reversed configuration	Closed, toroidal	Pulsed, linear system in which closed poloidal magnetic field lines surround and confine plasma

C. Fusion Fuels

Table III lists many possible light-ion fusion reactions that could be exploited in fusion power plants. The figures of merit used to select a fusion fuel are (1) the magnitude of the fusion cross section as a function of fuel temperature, (2) the energy released from each reaction, (3) the generation of neutrons as reaction products, and (4) the abundance of the fuel under consideration.

Figure 5 is a plot of the reaction rate parameters ($\sigma\upsilon$) for a number of fuels as a function of ion temperature. The brackets indicate that the product of the energy-dependent fusion cross section and the relative velocity has been averaged over an assumed Maxwellian ion velocity distribution. Those fuels whose reaction rate is appreciable at relatively low temperatures are of considerable interest since these would be the easiest to burn. Of all the fuels plotted, the deuterium-tritium reaction has the highest reactivity at the lowest temperature. A 50/50 mixture of deuterium and tritium is expected to be the fuel of choice for the first generation of both magnetic and inertial confinement power plants. The fusion power produced per unit volume of burning plasma is directly proportional to the reaction rate,

$$P = n_{\mathrm{D}} n_{\mathrm{T}} \langle \sigma \upsilon \rangle E_{fus}, \tag{3}$$

where n_{D} and n_{T} represent the densities of the reacting deuterium and tritium ions and E_{fus} is the energy released per reaction.

In the case of magnetic confinement, the fusion power produced per unit volume can be rewritten in terms of an important figures of merit: plasma beta (β). This dimensionless number represents the ratio of total plasma pressure to the pressure exerted by the confining magnetic field:

$$\beta = \frac{2nT}{B^2/2\mu_0}. \tag{4}$$

Large values of beta are desirable, since it represents how efficiently the expensive magnetic field is being used. Eliminating the density in the power expression for a 50/50 fuel mixture results in the following scaling of thermonuclear power density with beta, magnetic field, and temperature:

$$P \sim \beta^2 B^4 \frac{\langle \sigma \nu \rangle}{T^2} E_{fus}. \tag{5}$$

For DT fuel temperatures in the range of thermonuclear interest (7–30 keV), this expression becomes equal to

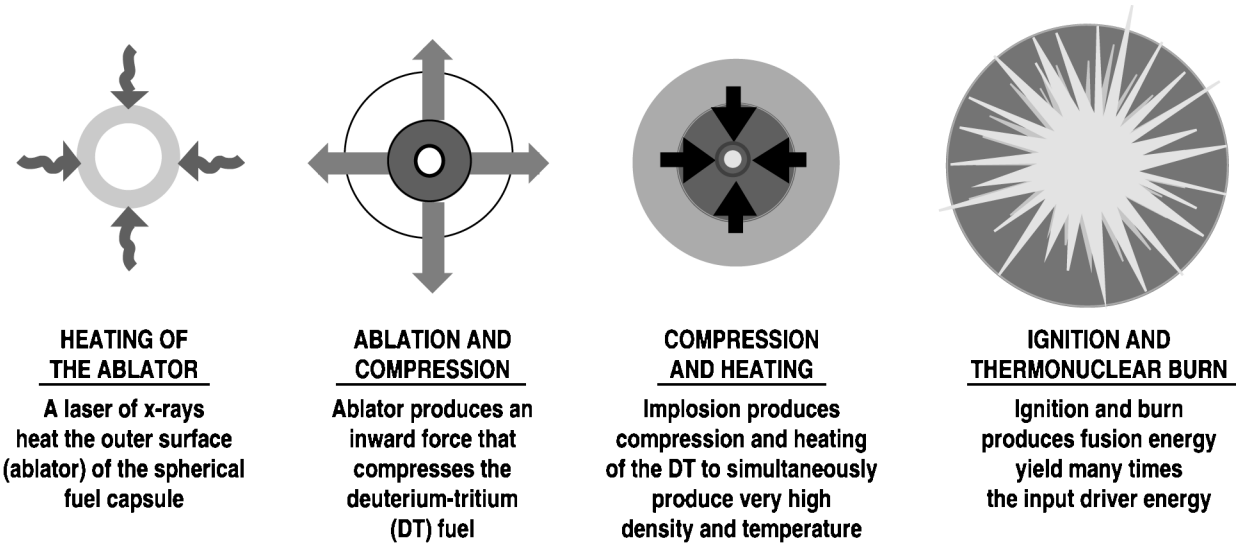

FIGURE 4 Schematic of inertial confinement process.

TABLE III Light-Ion Fusion Reactions

	Reaction energy (keV)	Threshold plasma temperature (keV)	Maximum energy gain per fusion
$D + T \rightarrow {}^4He + n$	17.6	4	1800
$D + D \rightarrow {}^3He + n$	3.2	50	70
$D + D \rightarrow T + P$	4.0	50	80
$D + {}^3He \rightarrow {}^4He + P$	18.3	100	180
$^6Li + P \rightarrow {}^3He + {}^4He$	4.0	900	6
$^6Li + D \rightarrow {}^7Li + P$	5.0	>900	6
$^6Li + D \rightarrow T + {}^4He + P$	2.6	>900	3
$^6Li + D \rightarrow 2\,({}^4He)$	22.0	>900	22
$^7Li + P \rightarrow 2\,({}^4He)$	17.5	>900	18
$^{11}B + P \rightarrow 3\,({}^4He)$	8.7	300	30

$$P = 1.1\beta^2 B^4 \ (\mathrm{MW/m^3}). \tag{6}$$

At a modest beta of 0.1 and a magnetic field of 6 tesla, the DT power density is on the order of 154 MW/m^3. Thus, a 2000-MW reactor would require a volume of approximately 140 m^3 of burning plasma.

Twenty percent of the yield from a DT fusion event is carried off by an energetic helium ion, or alpha particle.

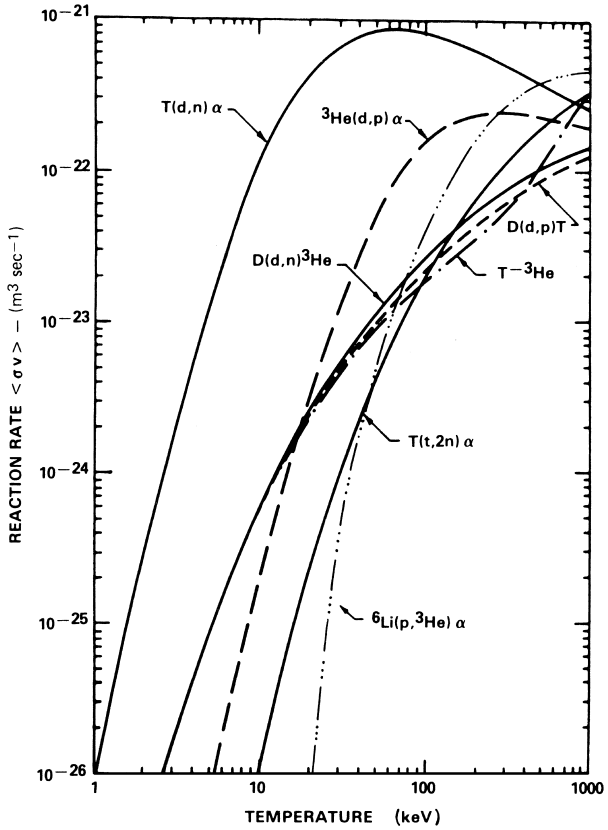

FIGURE 5 Comparison of reaction rates for various fuels.

Since it is doubly charged, it interacts via Coulomb collisions with the electrons and fuel ions in the plasma. At each collision, the helium ion transfers some of its kinetic energy to the plasma.

This internal source of heat is what can keep the plasma burning in the absence of externally injected power.

The other 80% of the yield from a DT fusion reaction is carried off by an energetic neutron, a particle of zero charge. Having no charge, the neutron is not influenced by magnetic fields and therefore cannot be confined magnetically. The neutrons rapidly stream from the reacting plasma and interact with the surrounding components of the reactor.

Neutrons are used to breed tritium, since tritium is radioactive (half-life of 12.6 years) and is not abundant in nature. This is accomplished via the following reactions with lithium:

$$n + {}^6Li \rightarrow {}^4He + T + 4.78\,\mathrm{MeV}$$

$$n + {}^7Li \rightarrow {}^4He + n + T - 2.47\,\mathrm{MeV}$$

^{6}Li has a natural abundance of 7%, with ^{7}Li comprising the remaining 93%. Lithium is present in large quantities in the earth's crust and in the oceans. The necessity of breeding and handling tritium is a complicating factor in the design of any fusion reactor based on the deuterium–tritium fuel cycle.

Neutron interactions with the structure of the reactor can lead to induced nuclear transmutations (which create radioactive material) and radiation damage (which may reduce the mechanical strength of the plasma chamber and blanket components). The level of radiation induced by these neutron interactions can be high enough that repairs to the power plant must be made by remote maintenance techniques (robots). The elements and isotopes leading to long-lived radioactivity include ^{59}Ni, ^{93}Mo, and ^{99}Tc. If these highly activating elements can be avoided, or if the natural isotopes that give birth to the offending isotopes could be removed from the materials comprising the plasma chamber structure (e.g., isotopic tailoring), the induced radioactivity could be short lived. Removing these offending elements and isotopes from structural materials without adversely affecting their strength represents a challenge to the creativity of materials scientists involved in the fusion program.

Once power plants based on the DT fuel cycle are operational, additional research into higher temperature, higher performance thermonuclear furnaces may point the way toward configurations capable of burning more exotic or advanced fuels. Such reactions would produce charged particles and few, if any, neutrons. Examples would include the proton-^{11}B cycle,

$$p + {}^{11}B \rightarrow 3\,{}^4He + 8.67\,\mathrm{MeV}$$

TABLE IV Major Energy Source and Loss Terms in Plasma Modeling

Process	Type	Description
Neutral beam injection	Source	Energetic neutral atoms which, upon injection and ionization, therrmalize on electrons and ions heating both species.
Radio frequency injection	Source	Resonant absorption of wave energy by electrons and ions at cyclotron frequencies that equal wave frequency.
Ohmic heating	Source	Finite plasma resistivity dissipates plasma current, heating electrons.
Alpha particle heating	Source	Thermalization of energetic dissipates plasma current, heating electrons.
Energy transport	Loss	Conduction and convection of particles and energy out of plasma due to Coulomb collisions, turbulence, and improper field alignment.
Atomic radiation	Loss	Bremsstrahlung, synchrotron, and impurity radiation that escapes optically thin plasmas, thus cooling electrons.

whose reaction products are simple helium ions. The temperatures required to initiate the burning of such advanced fuels are high compared with the DT cycle, typically in the 100- to 4000-keV range. Achieving such temperatures is nontrivial. At the present time no viable fusion system seems possible with p-^{11}B due to its low reaction rate and high radiation losses. An invention is needed. Building upon a successful DT base of operation, advances in reactor physics and plasma performance may make the burning of advanced fuels a logical and achievable future step.

D. Fuel Burning Conditions

The steady-state densities and temperatures in a plasma can be determined by solving a coupled set of partial differential continuity equations. For each species in the plasma (electrons, ions, and impurities) there are continuity equations governing the time and spatial evolution of their density and temperature. These equations take the following generic form:

$$\begin{aligned} \partial n/\partial t + \nabla \cdot \Gamma &= S - L \\ \partial/\partial t\left(\tfrac{3}{2}nT\right) + \nabla \cdot \mathbf{Q} &= S^* - L^*, \end{aligned} \tag{7}$$

where Γ and $\mathbf{Q}$ represent particle and energy fluxes, respectively. These fluxes are sensitive functions of the plasma density, temperature, geometry, and magnetic field. The volumetric particle and energy source terms on the right-hand side of these equations serve as driving terms in the evolution of the plasma density and temperature. These equations are quite complex and must be solved using sophisticated computer codes on very advanced computers. The mathematical modeling of thermonuclear plasmas is an art that requires both outstanding computational skills and physical intuition.

The value of any model is dependent upon the sophistication of the physics understanding of the various plasma source and loss terms. A great deal of time and energy has been devoted to the theoretical understanding of these fundamental plasma processes as well as in obtaining corroborating empirical data from current experiments. Both of these inputs have made the ability to model thermonuclear plasmas a growing reality. The sources and losses that must be taken into account in the modeling process are highlighted in Table IV, a brief noninclusive list of several of the important processes that determine the nature of the thermonuclear environment.

1. Magnetically Confined Burning Plasmas

Given the basic energy and particle sources and loses present in a magnetically confined plasma, what is the figure of merit describing a plasma burn? What combination of plasma density, temperature, and confinement time must be achieved before the reaction will go? To answer this question, examine the spatially averaged continuity equation for the total energy density in the plasma:

$$\frac{\partial}{\partial t}(3nT) + \frac{3nT}{\tau_E} = \frac{n^2}{4}\langle\sigma\nu\rangle E_\alpha - C_0 n^2\sqrt{T}. \tag{8}$$

The first term on the right-hand side represents the alpha power deposited into the plasma. The second term represents the power lost from the plasma due to bremsstrahlung radiation. The leakage of energy out of the plasma due to all other diffusive and conductive processes is lumped into the expression

$$3nT/\tau_E, \tag{9}$$

where τ_E represents the energy confinement time (i.e., the average time that a quantity of energy remains in the plasma before leaking out). A steady-state solution to this highly simplified equation yields an expression for the product of the average plasma density and the confinement time that must be achieved if the plasma is to be self-sustaining, or ignited:

$$n\tau_E \geq \frac{3T}{(\langle\sigma\nu\rangle/4)\,E\alpha - C_0\sqrt{T}}. \tag{10}$$

This relation is often called the ignition criterion for magnetically confined plasmas and is a function of fuel

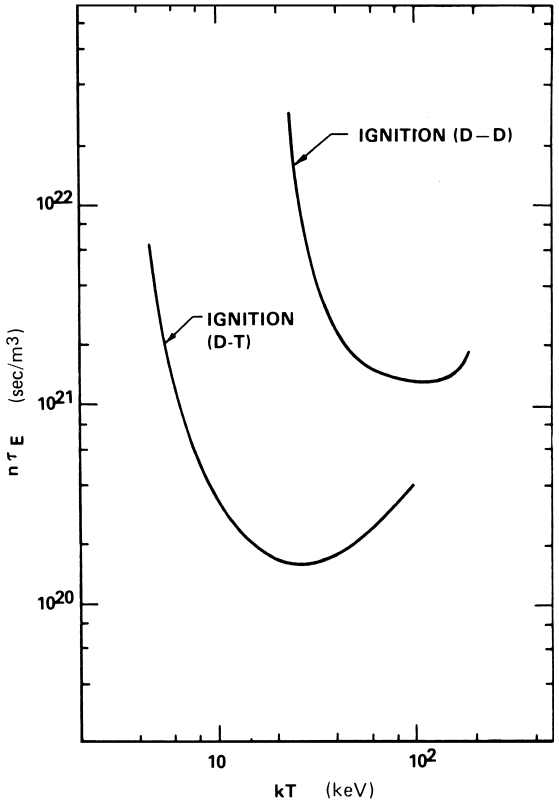

FIGURE 6 Comparison of ignition conditions for DD and DT fuels.

temperature only. Figure 6 is a plot of this expression for both deuterium–tritium and deuterium–deuterium fuel mixtures. Note that the least ambitious $n\tau_E$ product occurs in the temperature range 10–140 keV for DT and 60–80 keV for DD fuel. Thus, for DT fuel, an $n\tau_E$ product of at least 2×10^{20} sec/m^3 is required for ignition. In other words, if the average plasma density is 2×10^{20}/m^3, the energy confinement time must be approximately 1 sec. Determining how the confinement time scales, with reactor-size magnetic field strength and plasma density and temperature, is one of the major goals of the magnetic fusion program. Starting from first principles, expressions for the confinement time as a function of all relevant parameters in a fusion reactor have been derived and tested in many experimental configurations. Where there is a discrepancy between theoretical predictions and experimental results, empirical expressions are often developed that help guide the design of the next generation of experiments.

Heating the plasma can be accomplished in a number of ways, two of the most popular being radio frequency (rf) heating and neutral beam injection. If high-power radio waves are injected into a plasma at a frequency that matches the natural gyration frequency of the electrons or ions about the magnetic field lines, then a resonance can exist between the particles and the waves. This heating process is analogous to the carefully times pushes one applies to a person on a swing. If the pushes are applied at the correct frequency, then energy can be efficiently transferred. For magnetic fields of power plant interest, the ions have their cyclotron frequency in the 50- to 100-MHz range, while electron cyclotron frequencies are in the 50- to 100-GHz range. Energetic beams of neutral particles can be injected into a plasma where, upon ionizing, they become trapped in the magnetic field and thermalize in much the same way as alpha particles. The beams must be composed of neutral atoms to cross the magnetic fields surrounding the plasma. Beam energies in the neighborhood of 200–500 keV are required for efficient penetration. Major research efforts are under way in radio-frequency heating and neutral-beam injection to ensure the existence of reliable heating schemes for future reactors.

An ignited system requires no continuous external source of power for the burning process to continue. After the plasma is initially heated, the heat deposited by charged particle thermalization is sufficient to compensate for all plasma power losses. While an ignited system is a desirable goal, it by no means is a necessity. Efficiently driven reactors might compete with ignited systems on the basis of net plant efficiency, which is, after all, the ultimate figure of merit for any power-producing system.

In light of this distinction between ignited and driven systems, another important figure of merit for magnetically confined plasmas can be defined: the Q value, the ratio of the fusion power produced by the plasma to the power injected into the plasma:

$$\mathrm{Q} = \text{fusion power/injected power.}$$

If the thermonuclear plasma is viewed as a power amplifier, the Q value is the amplifier's gain. High Q operation is mandatory if fusion power plants are to be economical sources of power. Ignited plasmas have infinite Q values since the power required to sustain the reaction is zero.

While a self-sustaining reaction is a highly prized goal, driven plasmas may also be attractive sources of fusion power if their Q values are large enough (i.e., if the injected power required to sustain the reaction is a small fraction of the fusion power produced). Typically, Q values in excess of 15–20 would be required for competitive economics.

Based on the information in the preceding section, a "back of the envelope" estimate can be made for many of the major variables in a magnetic fusion power plant. Assume that the plasma shape is a torus with the following performance requirements: (1) total fusion power of 2000 MW, (2) a plasma beta of 10%, (3) an ion temperature of 20 keV, and (4) a confinement time of 1 sec. What would the plasma density, magnetic field, plasma radii, and torus size be?

From the ignition produce and the given confinement time of 1 sec, the plasma density is $2 \times 10^{20}/m^3$. From the density, temperature, and beta, the magnetic field required can be calculated to be about 6 T. For ions at 20 keV in a 6-T field, the Larmor radius is about 4 mm. If, for good confinement, the ratio of the Larmor radius to the plasma radius is small (i.e., 1/300 or so), then the plasma radius can be estimated to be equal to 1.2 m. The last remaining unknown is the radius of the torus itself. The volume of a torus is given by $2\pi^2 a^2 R$. The product of the fusion power density in the plasma and this volume is the total power produced. For 6-T fields and betas on the order of 10%, the fusion power density is 14 MW/m^3, leading to a torus radius of about 5 m.

While this analysis grossly oversimplifies the complexity of the situation, the parameters derived are nevertheless representative of what a toroidal fusion power plant might look like.

2. Inertially Confined Burning Plasmas

Inertial confinement fusion has an expression analogous to the ignition criterion for magnetically confined plasmas. It relates the product of the density of the fuel pellet and the pellet radius to a threshold value in much the same way as the ignition product relates the product of the plasma density and confinement time. The derivation is quite simple and underscores the basic goal of controlled fusion power, namely, the confinement of a reacting plasma for a long enough time to recoup the energy invested in getting the reaction to go.

There are two characteristic times relevant to the implosion and burn of a pellet: (1) τ_f, the time between fusion reactions, and (2) τ_d, the time the pellet burns before disassembling. An efficient yield should result if the following ratio is satisfied:

$$\frac{\tau_d}{\tau_f} \gg 1. \tag{11}$$

The time between fusion events is given by

$$\tau_f = \left(\frac{\langle \sigma \upsilon \rangle \rho}{m} \right)^{-1}, \tag{12}$$

where m is the mass of a reacting ion and ρ the mass density of the fuel. The disassembly time should be approximately equal to the time required for a pressure wave to travel from the pellet core to the pellet surface at the ion sound speed V_s:

$$\tau_d = \frac{R}{V_s}. \tag{13}$$

The inertial equivalent of the ignition criterion is thus given by

$$\frac{\tau_d}{\tau_f} = \rho R \frac{\sigma \upsilon}{V_s m}. \tag{14}$$

Since the term in the brackets is approximately equal to unity at a temperature of 20 keV, the ignition criterion becomes

$$\rho R \quad 1 \text{ g/cm}^2. \tag{15}$$

The range of 3.5 MeV alpha particles in matter is approximately 0.5 g/cm^2. To initiate a burn wave within the pellet, good alpha particle confinement raises the threshold value to

$$\rho R \sim 3 \text{ g/cm}^2. \tag{16}$$

The pellet gain required for economic reactor operation is a sensitive function of the efficiency of the pellet driver. Figure 7 is a simplified diagram of the power flow in an inertial fusion reactor. The electrical power entering the driver is converted to energy on target with a driver efficiency η. The pellet then amplifies this energy by a gain factor G. The energy released by the pellet burn is then thermally converted to gross electrical power with an efficiency ε. Some fraction f of the gross power must then be recycled back to the driver. The recirculating power fraction is given by

$$f = \frac{1}{\eta G \varepsilon}. \tag{17}$$

If a thermal efficiency of 40% is assumed, and very small values of f are desired, then the following relation between the pellet gain and driver efficiency must hold:

$$\eta G \quad 10. \tag{18}$$

Thus, if the driver has an efficiency of 5–10%, pellet gains on the order of 200–100 are required.

The energy, E_i, incident on the pellet that is necessary to achieve high pellet gains can be estimated from the relation that follows from an analysis of the several efficiencies involved in the implosion process:

$$E_i = \frac{2G^3}{\eta_c^2} \text{ MJ}, \tag{19}$$

where the compression ratio, η_c represents how much the fuel pellet has been compressed. If a volumetric factor

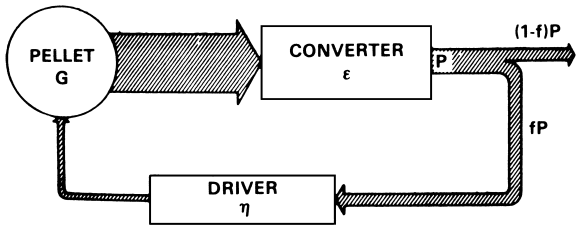

FIGURE 7 Schematic of power flow in inertial fusion reactor.

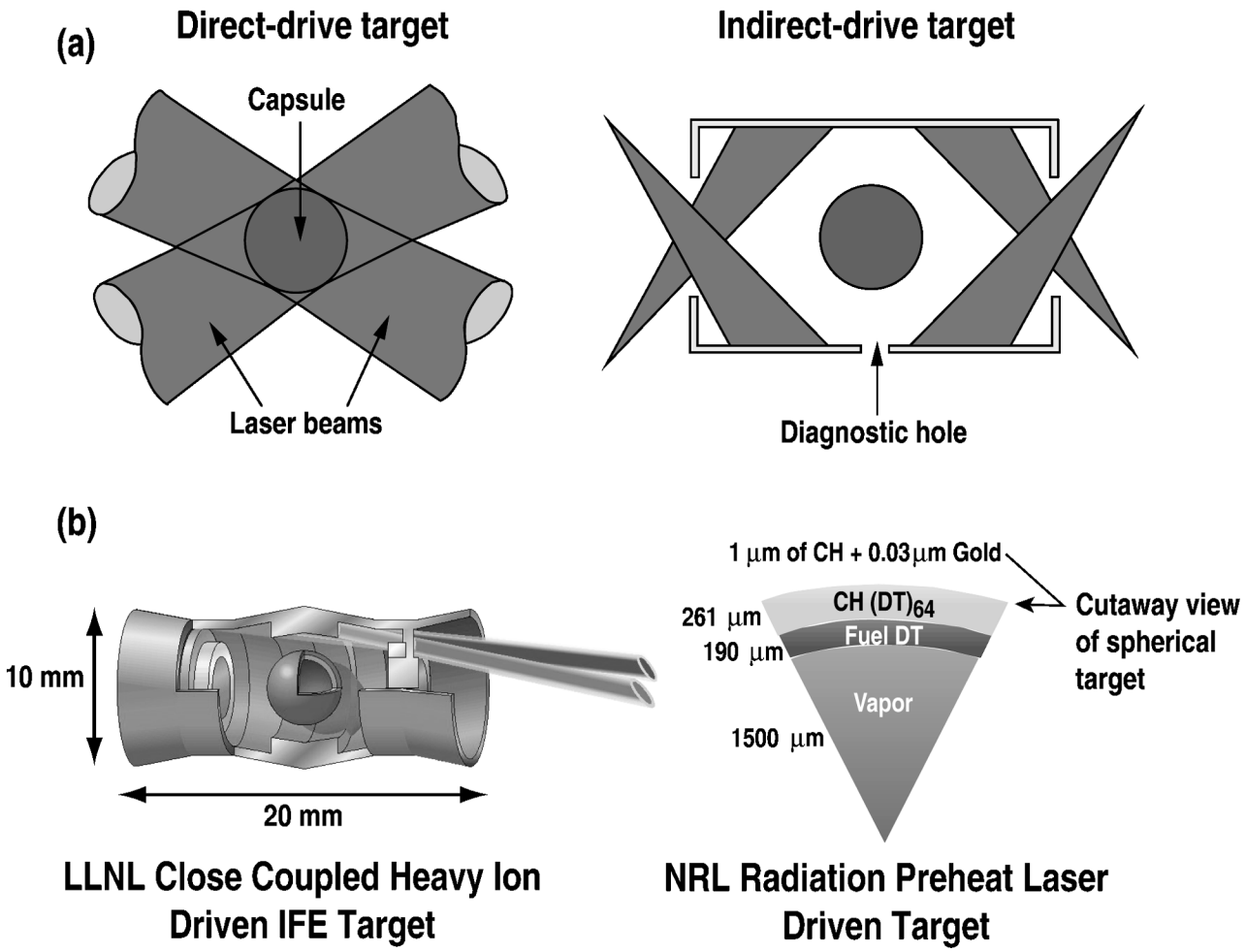

FIGURE 8 Inertial fusion target concepts. (a) Direct drive and indirect drive. (b) Typical Inertial fusion pellet.

of 10 compressions is achieved and a gain of 100 is required, then the incident energy required exceeds 10^{10} J. For $\eta_c = 1000$, the incident energy drops to about 2–10 MJ, values that should be achievable by both lasers and particle beams.

How big will the pellet be? Given a gain of 100, the pellet energy output will be about 200 MJ. For a DT fuel mixture, this corresponds to fusing about 6×10^{-7} kg of fuel. If only about 20% of the pellet is consumed before disassembly, then the initial mass of the pellet will be 3 mg. Uncompressed solid DT fuel has a density of 0.21 g/cm^3, yielding a pellet radius of about 1.5 mm, which after being compressed a factor of 1000 (in volume) will be 0.15 mm. Clearly, these fuel pellets will be quite small and their burns aptly defined as microexplosions. The product of this particular pellet radius and its compressed density satisfy the ρR criterion of 3 g/cm^2.

In order to successfully compress the pellet by a factor of 1000, its surface must be heated extremely uniformly. If there is a nonuniformity of more than about 1%, the compression will not be symmetric and the pellet will not ignite. There are two approaches being pursued to achieve this uniformity, shown in Fig. 8a. In "direct drive," the energy beams shine directly on the surface of the pellet. To achieve adequate uniformity will require at least 60 symmetrically located beams and each beam must smooth in space and simultaneous in time to about 1%. For "indirect drive," the energy beams shine into the interior of a metal container called a "hohlraum." The beams interact with the hohlraum materials and create x-rays that fill the hohlraum and can be more uniform than the incident energy beams. These x-rays then illuminate the pellet, ablating the surface and causing it to implode and compress the DT fuel inside to fusion conditions. Both a direct drive pellet and an indirect drive pellet inside a hohlraum are called a "target" since they are "shot" by the incident energy beams. Figure 8b shows typical inertial fusion target designs for an indirect drive heavy ion beam-driven target proposed by Lawrence Livermore National Laboratory (LLNL) and a direct drive laser-driven target proposed by the Naval

Research Laboratory (NRL). The outside plastic layer of the target capsule serves as a container for the DT fuel and acts as the ablator, absorbing in incident driver energy and compressing the fuel. The fuel is a frozen DT ice shell surrounding DT gas. The interior gas is adiabatically heated by the pellet compression to fusion conditions. This creates a "spark" of fusion reactions that ignites the cold compressed DT ice and creates a propagating thermonuclear fusion "burn" and microexplosion.

One important feature of pellet design is preventing the hot ablating surface plasma from preheating the pellet core. This is important since the pressure required to compress a pellet with a hot core would be substantially greater than that required to compress a cold core. Another issue in pellet design concerns the suppression of a class of fluid instabilities that rapidly deform the compressed pellet, causing further compression to cease. By proper choice of geometry and materials, the growth rate of such instabilities can be made longer than the burn time of the pellet, mitigating their effect.

Advanced hydrodynamic computer codes indicate that the pellet should implode at a velocity on the order of 10^5 m/sec. The time spent compressing a 1.5-mm pellet would thus be on the order of 10^{-8} sec. Since the driver energy is on the order of several megajoules, the driver power is 100–500 TW, which corresponds to an intensity on target of approximately 10^{14} W/cm^2.

The generation of such intense irradiances has historically fallen to the laser. Conventional flashlamp-pumped neodymium–glass lasers have low efficiencies (<1%) and may be unsuitable for repetitively pulsed operation, since the glass must be cooled for extended periods between shots. Diode-pumped solid-state lasers are now being developed that promise higher efficiency and reprated operation. While carbon dioxide gas lasers can be pulsed and have efficiencies approaching 10%, their wavelength of 10.6 μm is too long for efficient coupling to pellets. The interaction of an electromagnetic wave (laser light) and the ablating plasma at the edge of the pellet can result in total reflection of the incident light at a critical density layer defined as the radial location where the laser light frequency matches the plasma frequency. The plasma frequency is proportional to the square root of the plasma density. Thus, for deep pellet penetration, a high frequency (low wavelength) light source is required. Long-wavelength lasers therefore have a difficult time efficiently coupling to pellets and achieving the compression factors required to initiate a thermonuclear burn. The krypton–fluoride (KrF) laser is now being developed for fusion application. It offers short wavelength (0.25 μm) and rep-rated operation.

Energetic particle beams are potentially attractive alternatives to laser irradiation. Factors favoring such an approach include high electrical efficiencies (~25% or more), a mature technology base borrowed from the high-energy physics and accelerator communities, and the nearly classical and well-understood manner in which ions deposit their energy and momenta in matter. A major concern for ion beam drivers is focusing the beam. The ions repel one another, defocusing the beam. Use of heavy ions such as lead or bismuth is currently being pursued. The requirements for heavy ion beams are energies of 10 GeV and currents of 10^4 Å. The details surrounding this promising approach will be examined in Section II.

E. Plasma Equilibrium and Stability

Implicit in the struggle to achieve the extraordinary temperatures required for fusion reactions is the assumption that the fuel that is to be heated or compressed is stable, that is, the plasma is well localized in space. If the plasma undergoes some sort of violent shape change, the chances of efficiently heating or compressing the fuel would be small. Achieving spatial stability of the plasma is one of the most pressing issues associated with controlled thermonuclear fusion and is a necessary precursor to initiating an efficient burn.

Why is achieving plasma stability such a challenge? The answer to this question follows from an estimate of the pressure associated with a burning plasma. Surprisingly, the pressure of a plasma is given by the familiar ideal gas law:

$$p = nkT, \tag{20}$$

where n is the plasma density and kT the plasma temperature. Given that the density and temperature of a magnetically confined reactor-grade plasma is in the neighborhood of 2×10^{20}/m^3 and 20 keV, respectively, the plasma pressure would be on the order of 6×10^5 N/m^2, or more than 6 atmospheres. Thus, even though the density of the plasma is close to that of a good vacuum, the high temperature of the fuel results in high pressures. Even more of a challenge is the pressure required to compress an inertial fuel pellet, 10^{17} N/m^2 or 10^{12} atmospheres.

For a high-pressure plasma to remain localized in space, its pressure must be counterbalanced. In the case of magnetic fusion, this is accomplished by intense magnetic fields that are created by current-carrying coils and conductors and by currents in the plasma itself. Inertial fusion balances the pressures generated in the core of a fuel pellet by the inertia associated with a rapidly converging pressure wave in that same fuel. In either case, the current in or mass of the fuel contributes to its own confinement. As a result, with such large forces at work, any small perturbations in the shape of the plasma may continue to grow exponentially fast, resulting in a loss of force balance with the confining mechanisms. If this happens, the plasma will

rapidly blow itself apart. Any perturbations that grow and lead to a catastrophic loss of plasma confinement are called instabilities and must be suppressed if fusion reactors are to become a reliable source of power.

If these instabilities prevent magnetic fusion reactors from operating with at least modest values of beta (~5%), then the economics of magnetic fusion reactors may be severely compromised. Likewise, if the instabilities associated with inertial confinement fusion prevent the fuel pellet from being efficiently compressed and burned, the viability of this approach might be called into question. The challenge to both camps is to devise technically feasible and cost-effective means of suppressing the growth of instabilities. Examples would include tailoring magnetic field topology and fabricating creative pellet geometries.

F. Alternate Applications of Fusion Power

Fusion has the potential to provide the world with a new, high-grade form of energy composed of energetic neutrons, charged particles, and electromagnetic radiation. The distribution of energy among these forms depends on the fuel cycle. Although for the first generation of reactors this energy may be converted to heat to produce electrical power, it is appropriate to think about how fusion energy can be used directly to perform tasks that can be used directly to perform tasks that can be done in no other way or to perform common tasks more efficiently. Figure 9 highlights how the forms of fusion energy might be utilized when fusion reactors become available.

The feasibility of any of these applications will be decided by the state of technology and economics at the time fusion energy is developed. It is important to keep in mind that the future state of economics, resources, and technology will be different from now on. These applications may follow quite rapidly once a practical fusion reactor has been developed.

II. SPECIFIC NUCLEAR FUSION POWER SYSTEMS

In Section I, the generic thermonuclear environment required for fusion power generation was examined for both magnetic and inertial confinement schemes. In this section, how this environment is produced and maintained in specific nuclear fusion power systems will be investigated. This will include (1) the basic physics principles of the configuration, (2) the strengths and weaknesses of the approach, and (3) the outstanding issues that must be resolved if the concept is to be an economic and reliable source of power.

We begin by examining the most mature magnetic confinement concept, the tokamak. Progress has been impressive, with achievements in $n\tau_E$ approaching that required for reactor operations (Fig. 10).

A. The Tokamak

Developed by the Russians in the early 1960s, the tokamak is the most successful magnetic confinement concept to date, having achieved near reactor-like densities, temperatures, and confinement times. Tokamaks have generated up to 13 MW of fusion power for several seconds and have operated at lower power levels for hours. This mature scheme receives the lion's share of magnetic fusion

Transmutation
Breed fissile fuels (energy-suppressed mode) for use in complementary fission plants
Produce energy in a subcritical fissionable blanket
Transmute fission nuclear wastes to stable elements or short-lived isotopes
- Plutonium
- Minor actinides (Elements 89-103)
Create tritium
Create radioisotopes
Direct usage
Conduct neutron activation testing
Alter material properties
Use for detection and remote sensing
Conduct radiotherapy
Conduct neutron radiography or tomography
Thermal Conversion
Generate electricity
Generate process heat
Dissociate water into hydrogen and oxygen
Electrolysis or high temperature electrolysis of water to create hydrogen and oxygen
Desalination

FIGURE 9 Potential uses of fusion energy.

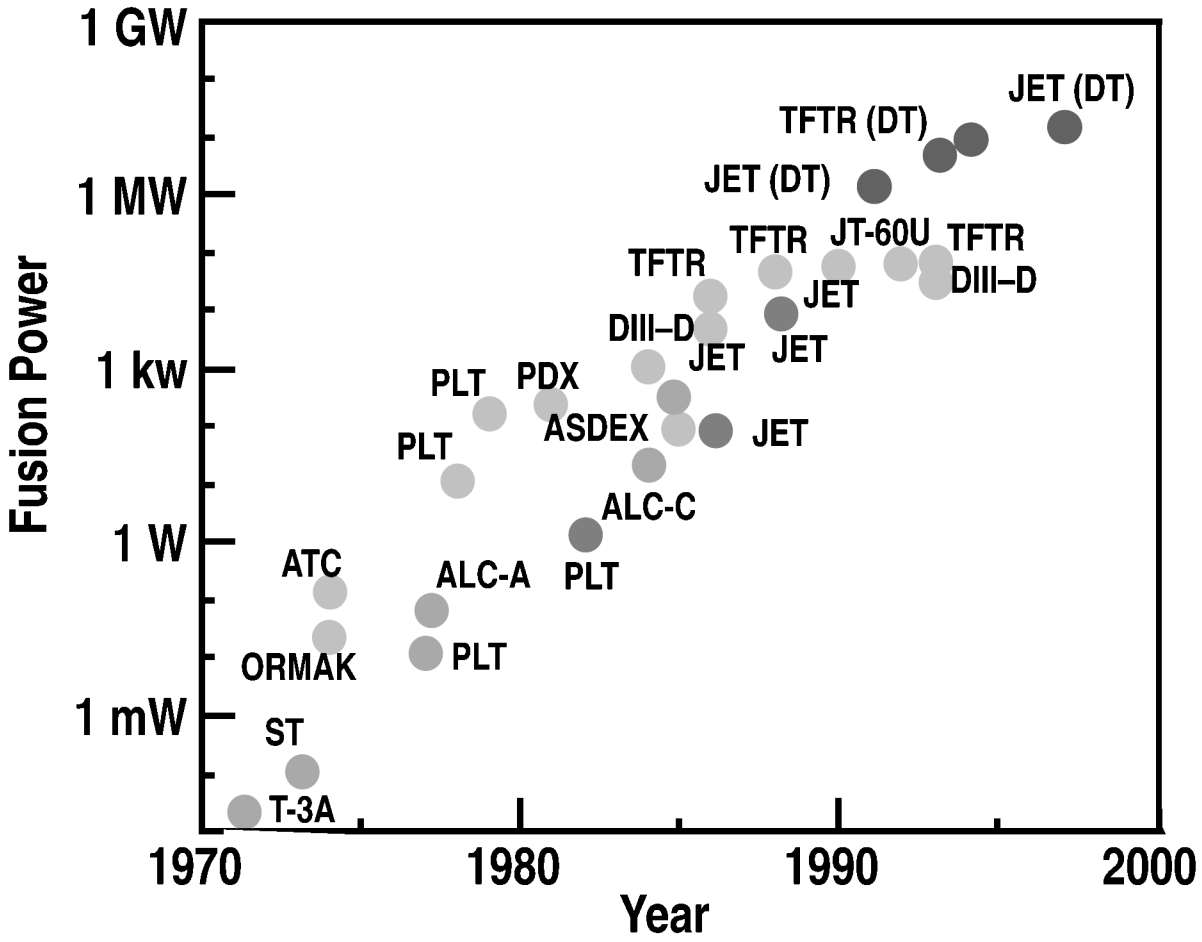

FIGURE 10 Progress toward goal of ignition.

funding throughout the world and will probably be the first magnetic confinement device in which substantial quantities of net energy from fusion are generated.

The strength of the tokamak configuration lies in its outstanding ability to confine plasma. Since it is a closed system, operating the plasma in an ignited mode is a very real possibility. Some of the weaknesses of the tokamak are (1) inherently low-beta operation due to plasma instabilities, (2) poor access to the torus due to the closely spaced toroidal field coils, (3) potential for disruptions that dump vast amounts of plasma and electromagnetic energy on the reactor walls; and (4) in its classic form, it is a pulsed device making it vulnerable to large mechanical and thermal stresses.

The toroidal configuration is a geometric attempt to solve the axial loss problem in mirrors by bending the linear mirror system into a torus. Unfortunately, in a torus with only a toroidal (axial) magnetic field, the plasma rapidly drifts out of the system. These drifts are a natural consequence of bending the magnetic field lines into closed circles. A simple torus can be changed into a tokamak by inducing an electric current to flow in the plasma the long way around the torus. The magnetic field B_p produced by this current encircles the plasma the short way around the torus and is called the poloidal magnetic field. The vector addition of the toroidal B_T and poloidal fields produces field lines that are helical (Fig. 11). As electrons and ions travel along these helical field lines, which sample both the top and bottom halves of the torus, they average out the drifts due to field line curvature. With no axial losses and no rapid drift motions across field lines, the only way for plasma to escape the tokamak magnetic bottle is by slow, random-walk collisions across surfaces of constant plasma pressure. The confinement properties of a tokamak can be traced to this helical field line structure.

The helical nature of the field lines in a tokamak leads to the creation of surfaces of constant pressure, or flux surfaces. Pick a starting point for a field line contained in an imaginary plane located in the cross section of the plasma. If this helical field line is traced around the torus

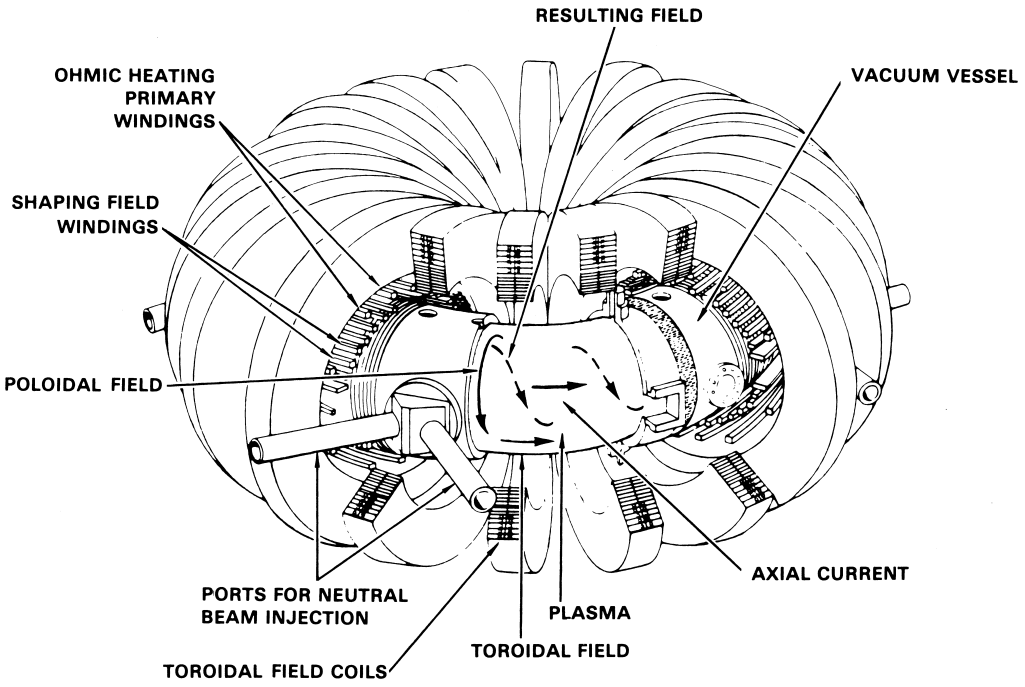

FIGURE 11 Particle motion in tokamak reactor.

until it returns to the starting plane, the line does not close on itself but is displaced from its starting position by an angle i, which is called the rotational transform. Indefinitely repeated punctures of this plane trace out a surface of constant plasma pressure.

The safety factor q is related to the rotational transform and can be expressed in terms of the geometry of the torus and the toroidal and poloidal magnetic fields:

$$q = \frac{2\pi}{i} = \frac{a}{R} \cdot \frac{B_T}{B_P}. \tag{21}$$

The safety factor is called q because plasma equilibrium in a tokamak requires that

$$q > 1. \tag{22}$$

This condition, called the Kruskal–Shafranov limit, imposes a maximum current I that can flow in a torus of given geometry and toroidal field:

$$I < \frac{2\pi a^2 B_T}{\mu_0 R}. \tag{23}$$

Adequate energy confinement is essential for a fusion reactor. Collisions between particles set the minimum energy and particle transport rates and the maximum confinement times possible. In general, a low level of fine-scale turbulence in the tokamak plasma causes a reduction in the confinement time from the collisional value. On the basis of a comprehensive survey of the results of confinement experiments done on tokamaks of all sizes around the world, the ITER design team has developed an empirical expression for the energy confinement times in various tokamak operating modes. For ELMy H-mode, the preferred operating regime, the expression is

$$\tau_{98y2} = 3.31 \times 10^{-11} I^{0.93} R^{1.39} a^{0.58} B^{0.15} \kappa^{0.78} \times M^{0.19} n^{0.41} P^{-0.69}. \tag{24}$$

Here I is the current, R the major radius, a the minor radius, B the magnetic field, κ the plasma elongation, M the average ion mass, n the plasma density, and P the heating power. All are in SI units except M, which is in AMU.

This expression has been used in the design of ITER and other proposed nest step burning plasma experiments, as well as in more recent tokamak reactor studies. For reactors, this energy confinement time, coupled with plasma stability considerations, leads to tokamaks with major radius of 5–6 m, plasma current of 10–15 MA, and toroidal magnetic field of about 5 T.

In addition to the empirical approach, tokamak energy confinement is being studied from the point of view of dimensionless parameters—the wind-tunnel scaling approach. If the dependence of confinement time on plasma size can be determined from a range of present experiments, in which all other important dimensionless parameters have values equal to what is expected in a reactor, then in principle the confinement time in the reactor is known. This approach leads to a result very similar to the empirical ITER expression, giving additional validity to the result.

Finally, theoretical and experimental studies of plasma turbulence are beginning to give some insight into the local, small-scale physical processes which govern the transport of particles and energy across the confining magnetic field. It is found that, in certain circumstances, the turbulence level can be very much reduced. Energy and particle confinement is found to correspondingly improve. It is found that plasma flow and, more specifically, shear in the plasma flow are critical ingredients in this process.

The current requirement to create helical field lines is generated by the presence of a toroidally induced electric field. This field is produced by varying the magnetic flux through the center of the tokamak. Conceptually this is similar to treating the conducting plasma as the secondary of a transformer. Since currents in the primary coil of a transformer cannot be increased without limit, the flux swing is finite, making the tokamak a pulsed device. The longest pulses in today's largest experiments are on the order of 10 sec, with smaller experiments having achieved discharges lasting hours.

From an engineering perspective, it is important that the plasma burn continuously for as long as possible since pulsed power production would cause large thermal stresses in the power plant's components. RF current drive, in which toroidal current is driven by radio frequency waves, may make steady-state tokamaks a reality, greatly improving their power plant viability and attractiveness.

If the plasma current were to disappear due to an instability, the plasma would rapidly dump its thermal and electromagnetic energy on the reactor wall. Since the thermal energy stored in a tokamak plasma can be on the order of 100 MJ, the rapid dumping of this energy in a localized area on a material surface can evaporate several millimeters of first wall structure. Preventing such instabilities is an ongoing priority of the tokamak program and is receiving considerable theoretical and experimental attention.

Since the plasma is a conducting medium of finite resistivity, the current passing through it is ohmically dissipated, the power being deposited into the electrons at the rate ηJ^2, where η is the plasma resistivity and J the current density. This resistive heating process follows as a natural consequence of tokamak operation and is called ohmic heating. The plasma resistivity is a strong function of the electron temperature, varying as $T_e^{-3/2}$. Thus, as the electrons are heated, the ohmic process becomes more and more ineffective at raising the electron temperature further. Typical maximum electron temperatures using only ohmic heating are believed to be on the order of 3 keV, well below that required for plasma burning and ignition.

Representative of the tokamak class of devices are the Tokamak Fusion Test Reactor (TFTR) located at Princeton University (Fig. 12), the Joint European Torus (JET) located at Culham Laboratory in England (Fig. 13), and the

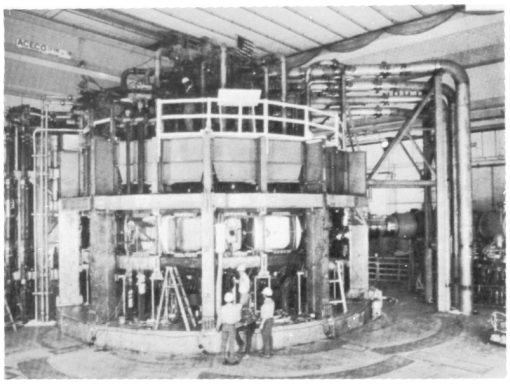

FIGURE 12 Tokamak Fusion Test Reactor. (Courtesy Princeton Plasma Physics Laboratory.)

JT-60U tokamak in Japan. TFTR was retired in 1998. JET and JT-60U are still in operation. They are the largest tokamak devices in the world and operated in regimes of density, temperature, and confinement time very close to that required for reactors. These devices had as their mission the near complete understanding of the major thermonuclear processes taking place in reactors. The machines answered fundamental questions regarding the transport of plasma in large configurations, the efficiency with which plasma can be heated with neutral-beam and rf injection, the stability of plasma at thermonuclear temperatures, and a host of other questions regarding how reactor-like plasmas are to be controlled. TFTR and JET used a deuterium and tritium fuel mixture in an attempt to reach plasma Q values of one or more.

Both machines successfully operated with DT, producing more than 10 MW of fusion power for several seconds. Both approached, but did not exceed, their goals of Q values greater than 1. JET achieved the highest DT Q value, 0.6. JT-60U, using deuterium fuel only, reached conditions that would have achieved $Q = 1.2$ if D-T had been used. Building upon the information learned from these and other tokamak experiments, we have a firm basis to design and build a tokamak experiment that will achieve a high Q value and produce a significant amount of fusion power for extended periods of time. The design of such a machine, the International Thermonuclear Experimental Reactor (ITER), has been carried out by an international team from the United States, the European Union, Japan, and Russia. While the United States has dropped out of this international effort, the other partners are continuing with refinement of the design and will collectively decide in 2001 whether or not to construct this experiment.

B. Laser Fusion

A laser fusion power plant that produces about 1000 MW of electrical power will require between 1 and 10 microexplosions per second, each yielding between 400 and

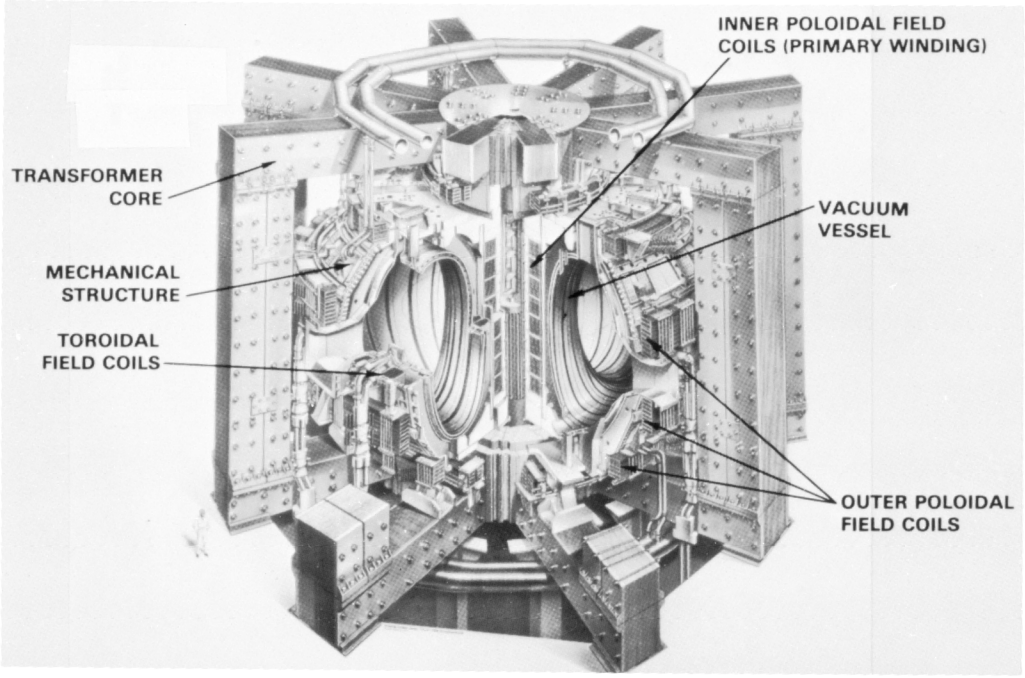

FIGURE 13 Joint European Tokamak experiment. (Courtesy JET Joint Undertaking.)

800 MJ. The targets would contain only a few milligrams of fuel and would have pellet radii in the range of several millimeters.

The debris produced by the implosion and burn of a pellet is composed of neutrons, X rays, and miscellaneous high-energy ions. Each of these components is born at a different time in the history of the pellet burn, creating discrete pulses of energy to the reactor chamber wall. Erosion, blistering, and sputtering of the wall can occur upon impact of the hot pellet debris. The response of the wall to this bombardment is a concern since a long wall-lifetime is essential.

One approach to this problem is to coat the reactor chamber with flowing liquids such as lithium, lithium–lead, or lithium–beryllium fluoride (FLiBe) The liquid convects away the heat deposited by neutrons and X rays and breeds the tritium needed for the fuel pellets. A thick liquid blanket might be used to also absorb the fusion neutrons protecting the reactor structure from radiation damage Fig. 14). Another scheme involves filling the reactor chamber with a low pressure gas such as xenon and initiating a pellet burn. The gas absorbs the energy from the X rays and debris, reradiating it to the wall over a longer time at lower power.

Short-wavelength lasers are used in today's inertial fusion experiments. The wavelength of the laser is an issue since it determines how efficiently the light couples to the plasma surrounding an imploding pellet. Short wavelengths have been observed to couple better than long wavelengths. The neodymium–glass laser has a relatively short wavelength of 1.06 μm. Frequency conversion, in which laser light of a given frequency is converted into laser light at higher harmonics (multiples) of the original frequency, allows the wavelength to be shortened to $1/2$ or $1/3$ μm. This can be accomplished by passing light from the neodymium–glass laser through a crystal of potassium dihydrogen phosphate, which is a nonlinear optical medium. Acting as an anharmonic oscillator, the crystal reradiates the light at two and three times the original frequency with a high efficiency (70%).

The focus of glass laser research in the United States is carried out at the Lawrence Livermore National Laboratory in Livermore California, where the 10-beam, 80-kJ NOVA laser (Fig. 15) operated for 15 years and where the 192-beam, 1.8-MJ National Ignition Facility laser is under construction. It should achieve fusion ignition and an energy gain of 10 or more around 2010. Other prominent laser facilities are the 60-beam, 30-kJ Omega laser located at the University of Rochester in Rochester, New York, and the 44-beam, 3-kJ Nike KrF laser at the Naval Research Laboratory, Washington, D.C.

C. Ion-Beam Fusion

Compression of fuel pellets can also be accomplished by intense beams of charged particles. While lasers can have low efficiencies and poor pellet-coupling properties, particle beams promise relatively high efficiency ($\gtrsim$25%) and

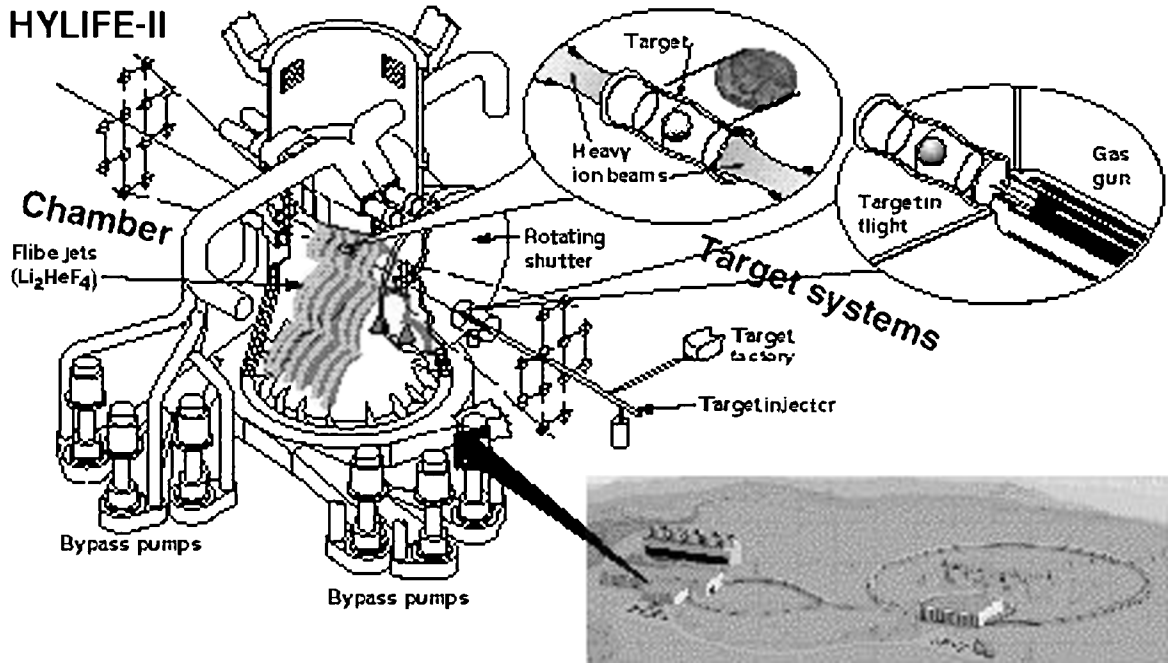

FIGURE 14 "HYLIFE-II, an IFE Power Plant Design" (courtesy of Lawrence Livermore National Laboratory).

should couple classically to the pellet via simple well-understood collisions. In addition, the generation of intense particle beams rests on a firm, mature technology base. High repetition rate accelerators have been routinely designed and operated by the high-energy physics community for over 30 years. The singlemost important issue facing ion-beam fusion is achieving the illumination required to initiate a pellet burn. The focusing of charged particle beams from a source several meters away on a target a mere millimeter across is a difficult task, given the various Coulomb repulsive forces and other beam instabilities that tend to spread the beam out over a larger area.



FIGURE 15 Beam lines for Nova experiment. (Courtesy Lawrence Livermore National Laboratory.)

The focus of the ion-beam fusion program is on use of heavy ions such as Pb or Bi. Work is underway at Lawrence Berkeley National Laboratory to develop a heavy ion accelerator for use as an inertial fusion driver. The virtues of heavy ion-beams follow from an analysis of ion range/energy relationships. For a required range of 0.1 g/cm^2, proton beams of 10^7 eV would be required, while for lead ions, energies on the order of 10^{10} eV are necessary. Since the pellet requires only a specific illumination for compression, lower current beams can be used if the ion energies are higher. For example, an intensity of 10^{14} W/cm^2 can be achieved with 10^7 eV protons at a current of 10 MA or with 10^{10} eV lead ions at a current of only 10 kA. Since beam instabilities are driven primarily by the current density of the beam, lower current beams are attractive.

Acceleration of the beams can be accomplished in a number of ways. One approach uses rf acceleration techniques similar to those used in conventional high-energy storage rings. The other scheme resembles and induction linear accelerator in which the beam current is amplified continuously as it propagates along the acceleration channel. Such accelerators can be as long as 5–10 km. Limits on individual beam power and current due to space-charge effects and other instabilities means that as many as 100 beams may be required. The propagation of particle beams from the accelerator to the pellet is an area of

active exploration. Focusing charged particle beams can be accomplished by charge neutralization techniques such as coinjection of electron beams, the creation of background plasmas, and the transport of beams through preformed plasma channels created by lasers or electron beams.

III. GENERAL TECHNOLOGICAL ISSUES

While most of the effort in fusion research is focused on understanding the physics of fusion, for fusion to be a practical source of energy, fusion technologies must also be developed.

A. Introduction

The technological challenges facing fusion have sometimes been equated to those faced in the manned space program, in the sense that before success can be achieved a number of very sophisticated systems will have to be integrated into an overall design, and all of these will have to work reliably if the reactor is to operate for any period of time. Some of these systems and issues are described here to give the reader a brief glimpse of the challenges that lie ahead in the development of commercial fusion energy.

B. Fuel Cycle and Impurity Control

The plasma can be thought of as a furnace in the sense that it has to be fueled with hydrogen and the helium ash has to be removed.

1. Fuel Cycle

Deuterium is a naturally occurring isotope and can be readily extracted from water in a ratio of 1 deuterium atom for every 6500 hydrogen atoms, whereas tritium, for all practical purposes, does not occur naturally and as a result will have to be manufactured in the power plant itself. Therefore, the fuel cycle for the first-generation fusion reactors will largely be dictated by the necessity of salvaging the portion of fuel not used and replenishing that part of the fuel that is used. With this in mind, the fuel cycle can be divided into five distinct parts: burn, exhaust, production, separation, and recycle.

The conditions for burn were discussed in Section I.D. The important point in that discussion from a fuel cycle standpoint is that only a small fraction of the fuel is actually consumed (typically 5–15%), with the balance being pumped out of the vacuum chamber in the form of exhaust. The gases will be composed of helium (from the fusion reaction), deuterium and tritium (unburned fuel), and hydrogen, oxygen, carbon, and nitrogen (desorbed from the reactor first wall). In the case of inertial fusion, the exhaust will also contain the remnants of the pellet debris. The exhaust is pumped out of the reaction chamber, and the tritium separated from the rest of the gases. A number of approaches are being studied for the separation of the hydrogen isotopes in the gaseous phase, but the one that is currently favored is cryogenic distillation. The separated tritium is then sent to an on-site storage system where it is combined with the tritium that was manufactured in the reactor.

The manufacture of tritium is accomplished in a structure referred to as a blanket. The function of the blanket structure and the materials that are used to breed the tritium (breeders) are discussed in Section III.D. The tritium that is produced in the breeder can be extracted in a variety of ways depending upon whether the breeder is a liquid or a solid. When the breeder is a liquid, the liquid can be pumped out of the blanket to an external extraction system. The tritium can then be removed from the liquid using a variety of techniques, including gas sparging, permeable membranes or chemical reactions. All of these techniques are under investigation, and a decision has not been made on which is the preferred approach. The removal of tritium from a solid breeder will be done *in situ* using an inert sweep gas such as helium to transfer the tritium to the external separation system. The helium may be doped with either oxygen to produce tritiated water or hydrogen for isotope exchange. Recent experimental results indicate that hydrogen enhances the removal. If the tritium is in the form of a gas, the separation can be accomplished with the techniques used on the exhaust gases. If it is in the form of tritiated water, it can be extracted using photoexcitation, electrolysis, or a catalytic process. The selected process will be dictated by economics, reliability, and the amount of tritium that can be efficiently removed.

The extracted tritium will be transported to the storage facility until it is required for refueling. The quantity of tritium that is stored would be equivalent to a one- to two-day fuel supply.

There are several approaches to fueling a fusion power plant. In inertial fusion, fueling is through the use of frozen (cryogenic) pellets that contain the proper DT mixture along with the ablator and a tamper. In magnetic fusion, the need to cross magnetic field lines imposes an additional requirement on the fueling of the reactor: for the fuel to reach the center of the plasma, it must do so before it becomes ionized. For this reason, injecting high-velocity macroscopic frozen fuel pellets into the plasma chamber is the favored approach.

2. Impurity Control

The buildup of impurities in a plasma may increase the radiative energy losses to the point that the plasma will begin to cool and can no longer burn. For closed systems such as tokamaks, the buildup of impurities is of particular

concern. It is not an issue in inertial concepts unless the pellet debris cannot be efficiently removed from the chamber before the next shot. A variety of approaches have been suggested to control impurities in a tokamak, the most successful being use of magnetic divertors.

A magnetic divertor consists of a collection of external current-carrying conductors that cause the magnetic field lines at the plasma edge to travel into a special chamber. These field lines intersect a series of plates that are actively cooled and pumped. Ionized particles that diffuse from the plasma are guided by these field lines and are prevented from impacting the first wall. These trapped particles travel along the diverted field lines until they are swept into the divertor chamber and collected on the divertor plates. In addition, impurity atoms released from the first wall become ionized at the plasma edge and are transported out of the vacuum chamber before they have a chance to enter and pollute the plasma core.

The issues associated with divertor operation are (1) the heat fluxes (>1 kW/cm^2) that the divertor collector plates experience in the divertor chamber; (2) high erosion rates on the divertor collector plates, which may necessitate frequent replacement. Many experiments have confirmed the effectiveness of divertors in reducing impurity accumulation in the plasma, and show that tokamaks can be operated in a high confinement mode ("H mode") during the divertor operation.

C. Plasma Heating

For a magnetically confined plasma to achieve the plasma temperatures necessary for fusion to occur will probably require a combination of heating methods consisting of ohmic, neutral beam, and rf. Ohmic heating is used to create plasmas and to raise the plasma temperature up to a few keV in much the same way that ordinary resistive heating raises the temperature of a current-carrying metal wire. The amount of heating obtained depends on the resistivity. As a temperature increases, the electrical resistivity decreases; as a result, the ohmic efficiency decreases, with the result that additional heating may be required if thermonuclear temperatures are to be reached. Neutral beam and rf heating schemes currently appear to be the best approach for achieving the plasma temperatures necessary for ignition to occur.

1. Neutral-Beam Heating

An energetic beam of particles, usually deuterium atoms, is injected into the plasma. Because they are neutral, the particles can readily pass through the magnetic field used to confine the plasma. Once inside the plasma, the atoms become ionized and collide with other particles in the plasma, releasing their kinetic energy and becoming part of the fuel cycle. To heat a reactor plasma effectively, a neutral beam system must be capable of delivery between 30 and 50 MW of beam power reliably for sustained periods of time. This requires the solution of a number of complex design issues that include extraction of ions with several megawatts of power, effective separation of charged particles from the energetic neutral particles, gas pumping capability on the order of 10^6 liters/sec, and a beam dump that can withstand several kW/cm^2 of power. An example of a typical neutral-beam system and its relation to the tokamak test reactor is show in Fig. 16. The key elements of the neutral-beam system are an ion source, a neutralizing gas cell, deflection magnet, beam dump, cryopumping surface, and a drift tube that connects the system on the plasma chamber.

To operate a neutral-beam system, a cold plasma of deuterium is formed in the ion source. Ions are then extracted from this plasma and accelerated through a series of grids that have varying electrical potentials in the tens of kilovolt range. The accelerated ions pass through a gas-neutralizing cell where a portion of the deuterium ions is neutralized via charge exchange. The ions that are not neutralized are then deflected away by a bending magnet using a transverse magnetic field. These charged particles are subsequently deposited on an actively cooled beam dump. This beam dump must be designed to handle 1–2 kW/cm^2 of heating from these particles.

Neutral-beam injection has been under development for decades and has been used successfully on a number of machines, with the most notable success being in the TFTR in which 17 MW of injected power raised the central plasma temperature from 2 to 20 keV.

2. Radio-Frequency Heating

In rf heating, electromagnetic energy is transmitted at radio or microwave frequencies into the plasma, causing a resonant transfer of energy from the waves to the plasma. Currently several rf heating techniques are being studied, such as electron cyclotron resonance heating (ECRH), which operates in the gigahertz (microwave) frequency range, ion cyclotron resonance heating (ICRH), which operates in the megahertz (radiowave) frequency range, and lower hybrid heating (LHH), which operates in the vector range between ICRF and ECRH. Therefore, the term "rf heating" pertains to a class of independent approaches.

Ion cyclotron resonance heating has successfully been used to heat ions in plasmas for years. Both slow and fast wave systems have been designed to heat ions in stellarators, tokamaks, and mirrors. It has been shown to be effective at both the first and the second harmonic and even at higher ion cyclotron frequencies. Power levels as high

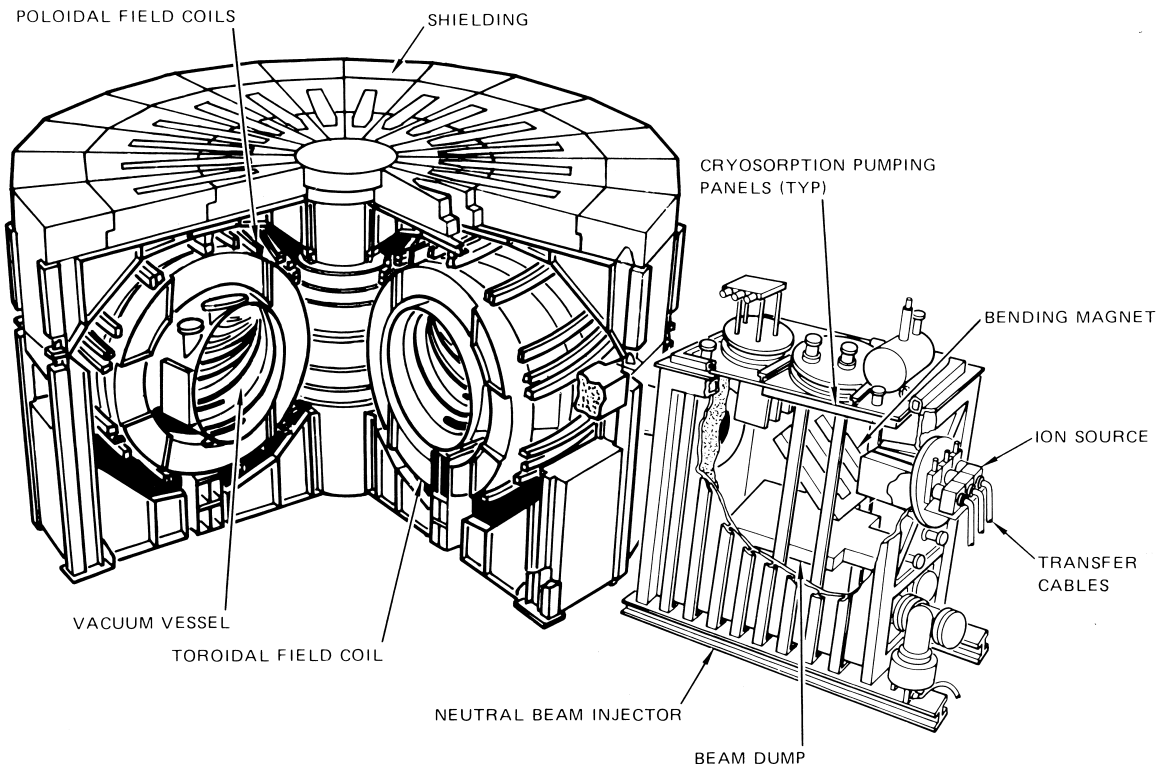

FIGURE 16 Schematic neutral particle beam system for TFTR.

as several megawatts have been achieved, with the result that the ion heating efficiencies were roughly equivalent to those achieved with a neutral beam. A typical ICRH system, the six 500-kW launchers used on PLT, is shown in Fig. 17. This system is composed of a transmitter, transmission line, tuning network, and antenna. The transmitter is essentially a wave generator and is responsible for generating the rf signal at the required power level and frequency and maintaining this signal through the start-up phase of the reactor operation into burn. The rf wave is then carried from the transmitter through a transmission line, which for ICRH can be a coaxial cable, to the tuning network. The tuning network, in turn, adjusts the system impedance to optimize the power delivered to the plasma. Delivery is accomplished by an antenna that is located in the plasma chamber. The antenna consists of a radiating element, which can be a loop, covered by a Faraday shield. The Faraday shield presents one of the most interesting challenges to the engineer and scientist in that it must be designed to meet the polarization requirements, heat loads from the plasma, erosion by the plasma particles, and induced rf currents.

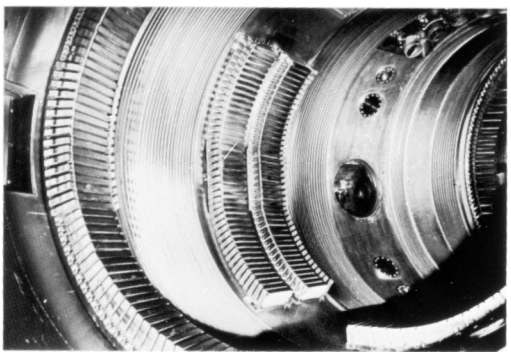

FIGURE 17 RF launcher structure on PLT. (Courtesy of Princeton Plasma Physics Laboratory.)

Electron cyclotron resonance heating uses microwave energy in the gigahertz frequency range. The microwave power is produced in a "gyrotron." A high power electron beam is directed through a powerful magnetic field generated by superconducting magnets. The electron beam spirals in the magnetic field and emits microwave radiation. The microwaves are transmitted to the plasma chamber in waveguides, pass through a dielectric window—ceramic or diamond—and are launched into and absorbed in the plasma. ECRH systems consisting of several 1-gigawatt gyrotrons, waveguides, and diamond windows have been successfully developed for use on DIII-D.

The LHH system is much the same as the ECRH and ICRH systems in that it uses the same type of equipment, such as transmitter, transmission line, and wave launcher

or antenna. The primary difference is in the positioning and design of the launcher. Because of the higher frequency of the waves for ECRH and LHH, a waveguide can be used in place of a loop antenna and Faraday shield. The waveguide allows the placement of critical components, such as ceramic windows, into the shield of the reactor, reducing radiation damage to these components.

D. Energy Transfer: First Wall and Blanket Systems

Figure 1 is a schematic of the power extraction process for a generic fusion reactor. It can be seen that a key element in the power extraction process is the first wall and blanket and that the primary function of the plasma in this regard is to be a source of heat and a source of neutrons for use in fuel production. The source of heat is obtained from energetic neutrons born from the DT fusion event along with particles that are neutralized in the plasma region and deposited on the first wall and blanket structure. This structure is essentially a heat exchanger designed to convert the kinetic energy from the plasma into heat that is extracted by a coolant and transferred to a power turbine, which generates electricity in much the same way as a coal-, nuclear- or oil-fired electrical plant does. The efficiency of the electrical production depends on a variety of factors including the type of conversion cycle (steam or gas turbine), operating temperature of the structural materials, type of coolant and coolant temperature, and reactor duty cycle. For most conceptual power plant designs, the conversion efficiency ranges from 35 to 42%.

In the energy conversion system, the first component to intercept the plasma energy is a structure referred to as the first wall whose function is to provide an interface between the plasma and the blanket structure and to convert the energy of the neutral particles and electromagnetic energy impinging on it into heat. To maximize thermal efficiency, this structure is usually thin and, as a result, must be carefully designed to accommodate the loads associated with its operation and to maximize its structural life. Lifetime is a concern in the design of both the first wall and the blanket, but it is of particular concern with respect to the first wall since failures of this structure have the potential of shutting down the reactor. The type of failures that the first wall can experience are:

1. *Leaks*, where the coolant can penetrate into the plasma chamber
2. *Fracture*, which can be gross rupture of the wall producing disruption of coolant flow, loss of vacuum, or flow of coolant into adjacent areas
3. *Deformation*, where the structure can plastically deform to the extent that it exceeds the design allowables of symmetry. In the worst state, the structure could deform toward the plasma, resulting in increased localized heating.

Factors that influence component life are gravity and pressure loads, thermal stress, reactor operating or duty cycle effects, and radiation effects (see Section III.F). Components should have as long a life as possible since lifetime directly impacts the cost of electricity. The cost of electricity as a function of maximum fluence is shown in Fig. 18. Behind the first wall structure is a composite structure referred to as a blanket. For first-generation fusion power plants, the primary purpose of the blanket will be to breed

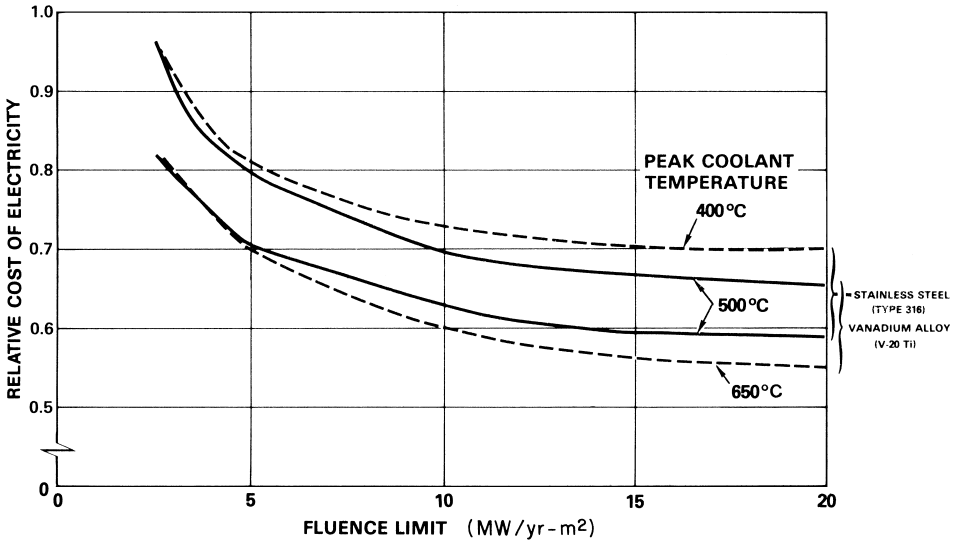

FIGURE 18 Example of impact of wall life on cost of electricity.

tritium. Because of its favorable cross section, lithium is the most efficient material to breed tritium; for this reason, all DT fusion reactor blankets contain some form of lithium either as a pure metal or as a compound such as lithium-lead or lithium oxide. Lithium is composed of 7% ^{6}Li and 93% of ^{7}Li and is present in large quantities in the earth's crust and oceans. Therefore, it is not a limited resource and is readily obtainable. Tritium is produced in a fusion reactor blanket via the following reactions:

$$\mathrm{n} + {}^6\mathrm{Li} \rightarrow {}^4\mathrm{He} + 4.78\,\mathrm{MeV}$$

$$\mathrm{n} + {}^7\mathrm{Li} \rightarrow {}^4\mathrm{He} + \mathrm{T} + \mathrm{n} - 2.47\,\mathrm{MeV}.$$

E. Nuclear Shielding

Most of the neutrons born from DT fusion are absorbed in the blanket. Those that pass through the blanket structure must be attenuated, since they are then of no practical value and can cause problems such as (1) the generation of radioactive material in the reactor structure that will necessitate additional cooling, (2) nuclear heating of the magnets, and (3) destruction of the insulation in the magnets via radiation damage, shortening their useful lives.

The shield, located between the blanket and the magnets, is typically composed of a combination of high-Z materials such as stainless steel, molybdenum, and tungsten to stop gamma rays and low-Z materials such as boron and carbon to stop neutrons. In magnetic confinement, the thickness of the shield is a trade-off between the strength of the magnetic field needed to confine the plasma (which determines how close the plasma the magnets will have to be located) and the amount of heating and radiation damage that the magnets can withstand (which determines the amount of leakage through the shield that can be permitted). Typically the shields are on the order of a meter thick.

The most challenging area of shield design is the shielding of the penetrations and ports in the reactor to prevent channeling or streaming of the neutrons from the plasma. The basic design issues are the need for active cooling, material selection, and ease of removal for maintenance of the internal reactor parts. In inertial confinement, the requirements are much the same as for magnetic confinement, with the exception of the tradeoffs between magnet efficiency and radiation damage. The primary challenge is the necessity of protecting the critical final focus mirror (laser) or magnets (ion beams) of the inertial driver from neutron streaming.

F. Materials: Radiation Effects

To appreciate the challenges in material selection, one must understand what can happen to the materials in a fusion reactor and how that environment differs from that of a fission reactor, particularly with respect to radiation damage. Radiation damage is the bulk change in material properties as a result of the interaction of neutrons with the atoms of a host or target material. The interaction is independent of temperature while the resultant change in properties is not. The primary difference between fusion and fission is the energy of the neutron born from the reaction. For fusion it is 14 MeV, while for fission it is typically around 2 to 3 MeV.

The easiest way to envision the consequences of the interaction of these neutrons on materials is to think of a rack of balls in a billiard game. The rack represents the atoms of the structural material, and the cue ball is the neutron from the reaction. The first ball that the cue ball impacts is called the primary knock-on atom (pka). When the pka recoils from the collision, it in turn impacts other atoms, creating a cascade effect. It is this cascading of atoms through the structure that produces the radiation damage rather than the incident neutron, which only initiates the event. The magnitude of this cascade depends upon the energy of the colliding neutron and the type of reactions (elastic or inelastic) this collision produces. Elastic collisions are essentially the billiard-ball type of reactions that we have discussed. Ineleastic reactions occur at higher neutron energies, typically for neutron energies >2 MeV. While there are a few inelastic reactions in fission, there are many in fusion. The inelastic reaction leaves the target atom in an excited state that subsequently disposes of this energy by emitting gamma rays, additional neutrons, or light ions (helium and hydrogen). It is in the production of several hundred atomic parts per million of helium that separates fusion from fission and complicates the life of the material scientist.

To quantify the magnitude of the collisions produced, a parameter referred to as displacements per atoms (dpa) was created. A dpa is not a measured quantity but rather a probability that a neutron of a certain energy will create a certain number of events. Typically for a light-water reactor at end of component life, the material might experience a few dpa, while in fast fission reactors it would likely be around 100 dpa; and in fusion it could be several hundred dpa (assuming a material could withstand that level of damage). To develop a sense of what a dpa really is, consider a fusion reactor with a neutron wall loading of 1 MW/m^2. This wall loading, which would be low for a commercial reactor, produces roughly 10 dpa/year in stainless steel. This seems like a small number until one realizes that the atomic density for stainless steel is slightly less than 10^{23} atoms/cm^3 and that 10 dpa means that every one of those atoms is moved from its lattice site 10 times in a year! When an atom is moved from its lattice site, it leaves a hole; and when the displaced atom comes to rest,

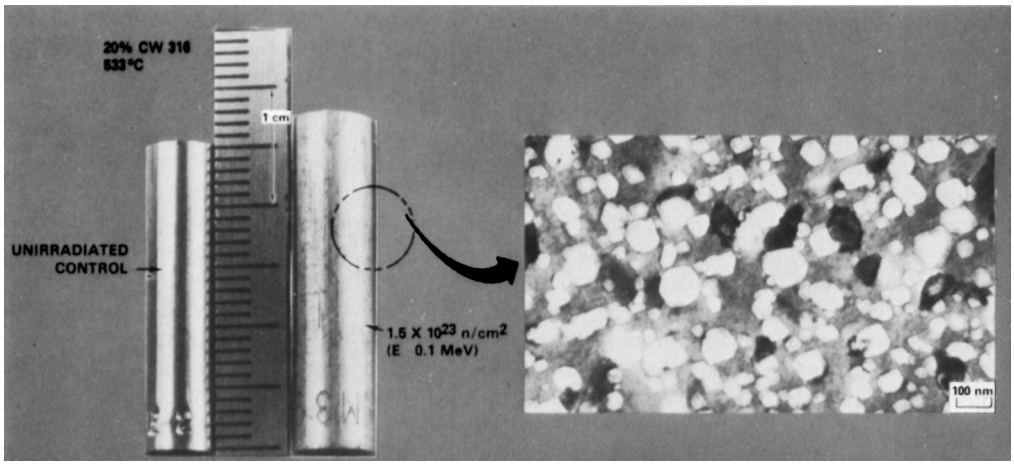

FIGURE 19 Example of void swelling on stainless steel.

it is usually between two other atoms and is referred to as an interstitial. In 99% of the collisions, the displaced atom moves back into a vacancy, eliminating the defect. However, roughly 1% of the atoms do not go back to their site; these are responsible for creating the changes in mechanical properties or dimensions (swelling) that result in shortened component life.

The changes in mechanical properties are brought about because the interstitial position between the lattice atoms is smaller than the atom and is forced into it and, as a result, the induced strains create dislocation networks. This is similar to cold working a metal and has approximately the same results: an increase in tensile strength with a corresponding decrease in ductility, a decrease in fatigue strength, an increase in creep rate, and an increase in the ductile-to-brittle transition temperature (for those metals that exhibit a transition temperature). The magnitude of the change in properties for materials is roughly the same for fast fission reactors and fusion reactors in the sense that the maximum change in properties (saturation) occurs at a few dpa. However, there is some indication that additional change can occur at higher damage levels (>100 dpa), but this has yet to be experimentally confirmed. While the displacement damage is independent of temperature, the movement of the defects is dependent upon temperature. For example, at low temperatures ($<0.5\ T_m$, where T_m is the absolute melting temperature) strength is increased, and helium does not appear to affect the results. At temperatures, $>0.5\ T_m$, where annealing of defects can occur, it has been found that helium substantially reduces the ductility of a material. Unfortunately, the phenomenon of helium embrittlement cannot be easily studied because of a lack of high flux, intense 14-MeV neutron facility. A notable exception, and where the helium embrittlement was first observed, is with nickel-bearing materials in mixed-spectrum fission reactors, where He is produced by (n,α) reactions.

Swelling has been found to occur in all metals tested and in many ceramics. While the exact reasons why some metals swell faster than others and the mechanisms for swelling are open for discussion; it appears that helium again plays a significant role, particularly in the stabilization of the voids. Figure 19 shows the microstructure of irradiated stainless steel and also the macroscopic results. While swelling has not been identified as a failure mode in the fusion program, it can be a source of stress and in turn can lead to excessive radiation creep. Therefore, it is desirable to use materials with as low a swelling rate as possible. The impact of temperature on swelling is much like the impact on strength, that is, mixed. At low temperature (between 0.3 and 0.5 T_m), the swelling appears to be almost independent of temperature and helium. At temperatures $<0.5\ T_m$, there is a slight decrease in selling as the defect damage begins to anneal out, but this benefit is short lived in that the transmuted helium atoms begin to coalesce, and a phenomenon referred to as break-away or rapid swelling occurs. It is because of this potential for rapid swelling and concern about helium embrittlement that reactor designers usually restrict the application of structural materials to a maximum operating temperature between 0.5 and 0.6 T_m.

Up to this point the discussion has treated radiation damage generically, independent of application. However, the place where materials are used in a fusion reactor will have a great bearing on their radiation environment. In fusion reactors, regardless of the type of confinement, the materials can be divided according to their application. For simplification, we shall consider only the first wall, blanket, and magnets. There are other subsystems such as neutral beams, rf heaters, divertors, and vacuum pumps,

each with its own set of materials requirements, but the first three groups, together with the shield, represent the greatest usage of materials. (The shield materials, however, were discussed in the previous section.)

1. First Wall and Blanket Materials

The burning of DT fuel in a fusion reactor results in three types of radiation that can strike the first wall: charged particles, electromagnetic radiation, and neutrons. The effect of the neutrons on the structural materials was discussed previously. The charged particles consist mostly of hydrogen isotopes, helium, and electrons. In inertial fusion, debris from the pellet would be included. The electromagnetic radiation is composed of line, synchrotron, bremsstrahlung, and recombination radiation. The first wall can also be struck by neutral atoms formed by charge exchange; the approaches used to reduce this were previously covered in the impurity section.

The radiation that escapes the impurity control devices impacts the first wall, causing surface heating and erosion in addition to plasma contamination from the sputtered wall atoms. Of these effects, surface erosion and plasma contamination are the most important because they can impact reactor performance. It is for this reason that studies are in progress to develop low sputtering or low-Z coatings to protect the wall material. Since the first wall is required to intercept a portion of the plasma energy for use in electrical power generation, it is desirable to have the wall operate at as high a temperature as possible for efficiency. High-temperature materials such as steels and refractory metals are usually considered. Nickel–base alloys were originally considered but found to be susceptible to helium embrittlement. The materials currently of interest for the first wall are the austenitic stainless steels such as AISI type 316, the martensitic type steels (also called ferritic steels) such as the Fe—12% Cr—1% Mo or 9% Cr—1% Mo class, the vanadium-base refractory metal, typically V–Cr–Ti, and the new class of ceramic composite materials such as SiC fibers in a SiC matrix.

In the blanket structure, the structural material is usually the same as that for the first wall. Since this structure is the first to receive the 14 MeV neutrons, it will receive the greatest amount of radiation damage. A major effort both in the United States and abroad is to develop materials that are resistant to damage levels over 100 dpa (ferritic steels and vanadium alloys V–Ti–SiC and V–Cr–Ti, and SiC/SiC), and with further research it may be possible to develop others.

An important aspect of fusion materials selection is neutron activation. Neutron interaction with the first wall, blanket and shield materials can "activate" them, creating radioactive materials. By selecting "low activation" materials for those components of a fusion power plant, materials that do not produce high levels of long-lived activation products, the level of radioactivity produced can be controlled. This has the potential to give fusion very good safety and waste management characteristics. Selected ferritic steels and vanadium alloys have the potential to be low activation materials. Some of the newly developed ceramic composite structural materials, such as silicon carbide fibers in a silicon carbide matrix (SiC/SiC composite), have excellent promise as very low activation fusion power plant materials.

The breeding materials are typically lithium or an alloy or compound of lithium. In cases where pure lithium is not used, the material selection is initially based on the lithium atom fraction, then on its phase stability, and finally on its melting point for solid compounds. Typical lithium compounds are lithium lead, lithium aluminate, lithium silicate, lithium zirconate, and lithium oxide. Liquid lithium, since it is a liquid, usually is not a concern with regard to radiation damage. The issues regarding use of liquid lithium involve increased pumping requirements as a result of pushing liquid metals across magnetic field lines (magnetohydrodynamic effects, corrosion and compatibility. Lithium fire safety is an ongoing concern, but that appears to be solvable by design. Solid breeders are susceptible to radiation damage, but the concern is primarily with the inhibition of tritium release.

2. Magnets

In magnetically confined fusion, magnets are used to confine the plasma. Currently two types of magnets are used: normal and superconducting. A normal magnet essentially consists of pure high-conductivity copper and an insulator for magnets with fields of 5 T or less. For magnets with higher fields, such as the Bitter type, steel cladding is used to provide the structural support. Since these magnets tend to be behind the shield, the neutron energy and flux are reduced by several orders of magnitude. Therefore, the primary concern with this structure is the heating caused by the neutrons and the gamma radiation, which will impact the heat transfer requirements. Radiation damage is a concern for both the copper and the insulator. For the copper, the concern is with swelling, which can reduce the electrical conductivity, thus decreasing the efficiency of the magnet. The insulator is a concern because the radiation damage can decrease the resistivity of the insulator, allowing the magnet to short out.

Superconducting magnets have similar problems; however, the primary difference is in the operating temperature of the magnets. Normal magnets tend to operate at or above room temperature, and as a result they can be cooled by water. Superconducting magnets, on the other

hand, operate at 4 K and are cooled by liquid helium. The superconductors currently considered are Nb–Ti and Nb_3Sn, both with a stabilizer. Separating these materials is an electrical insulator that is either a fiberglass epoxy or a polyimide fiberglass. Radiation damage to these materials is similar to normal magnets in that the neutron causes an increase in the electrical resistivity of the stabilizer, which has to be annealed out when the refrigeration costs become excessive. Annealing is accomplished by allowing the magnet to return to room temperature and then cooling the structure again. While this technique removes a portion of the damage, some remains and, as a result, there is a finite number of times that the magnet can be annealed. In addition to the damage in the stabilizer, the gamma radiation causes a loss in the strength of the insulator. The polyimide insulator has been found to be more resistant to damage than the epoxy; however, additional research is required. If radiation-resistant coppers and insulators are developed, then the concern will shift to the superconductor and the radiation damage to it. Unlike the first wall, the radiation damage to the magnets can be controlled by the thickness of the shield. This trade was described in the shield section.

IV. PRESENT STATUS

Major advances and improvements have been made in both magnetic confinement and inertial confinement during the last few years. Tokamaks have achieved record values of $\eta\tau_E$ (2×10^{20} sec/m^3) and plasma beta (12%) and have approached energy breakeven with D-T fuel. Currents are now routinely being driven by rf waves, opening up the chance for steady-state tokamak operation. Novel applications for rf injection and heating continue to be explored. The design and operation of a successful ignition device such as ITER appears scientifically feasible.

Progress in high-energy glass and KrF lasers continues to be made. Pellet compressions of over 600 have been achieved. Increased irradiances and shorter wavelengths are leading to a more fundamental understanding of laser/plasma interactions and laser/pellet coupling issues. A firm basis now exists for design of targets that are expected to demonstrate ignition and energy gain of about 10 in the National Ignition Facility by 2010.

A. Tokamaks

Tokamaks are by far the leading magnetic confinement devices for controlled fusion. The progress in the past decade has demonstrated the scientific feasibility of fusion power, reaching reactor-like plasma conditions. At present, the leading facilities are the JET tokamak at Culham in the U.K. and JT-60U at Naka in Japan. The JET facility is used by a consortium of European research establishments. Both JET and TFTR (a large tokamak at Princeton University, now being dismantled) have conducted experiments with D-T fusion fuel, producing central fusion power densities comparable to reactor conditions, but for very brief periods of time. The JET tokamak holds most of the fusion performance records: 13 MW maximum fusion power, 14 MJ maximum energy produced in a single pulse, and highest value of fusion gain, $Q = P_{fusion}/P_{external} = 0.6$. In pure deuterium plasmas an 'equivalent' gain can be defined (the value of Q that would be obtained if half the deuterium used in the experiment were replaced by tritium). JT-60U has reached $Q_{equivalent} = 1.2$. Other major tokamaks providing much of the science of fusion plasmas are the DIII-D and Alcator C-Mod in the U.S., the Tore-Supra in France, and the ASDEX-U in Germany. The studies using these facilities emphasize work on plasma instrumentation, diagnosis, and control. They are also studying long-pulse, essentially stationary operation using noninductive current drive. Together these programs have established the scientific basis for proceeding with the construction of a burning plasma test reactor such as the International Thermonuclear Experimental Reactor (ITER). Table V highlights some of the major parameters of these machines. A schematic of ITER is shown in Fig. 20.

B. Lasers and Particle Beams

Development of high power, rep-rated short wavelength lasers is continuing, with attention being focused on KrF lasers at the Naval Research Laboratory and diode pumped solid state lasers at Lawrence Livermore National Laboratory. Overall efficiencies as high as 5% have been observed in KrF lasers, and short-wavelength experiments at Rochester indicate very good coupling. The 12-beam Gekko laser facility at Osaka University in Japan has achieved cryogenic pellet compressions as high as 600. The NOVA 10-beam Nd:glass laser at LLNL was capable

TABLE V Major Tokamak Experiments

Parameter	TFTR USA	JET Europe	JT-60U Japan	ITER[a] International
Major radius (m)	2.5	3.0	3.4	6.2
Minor radius (m)	0.85	1.25	1.1	2.0
Plasma current (MA)	2.5	5.0	3.0	15.0
Toroidal field (T)	5.2	3.5	4.5	5.3
Auxiliary heating (MW)	33	40	66	73
Temperature (keV)	10–20	10–20	10–20	8
$N\tau$ (m^{-3} s)	1.5×10^{20}	5×10^{19}	1×10^{20}	5×10^{20}

[a] ITER-FEAT (2000).

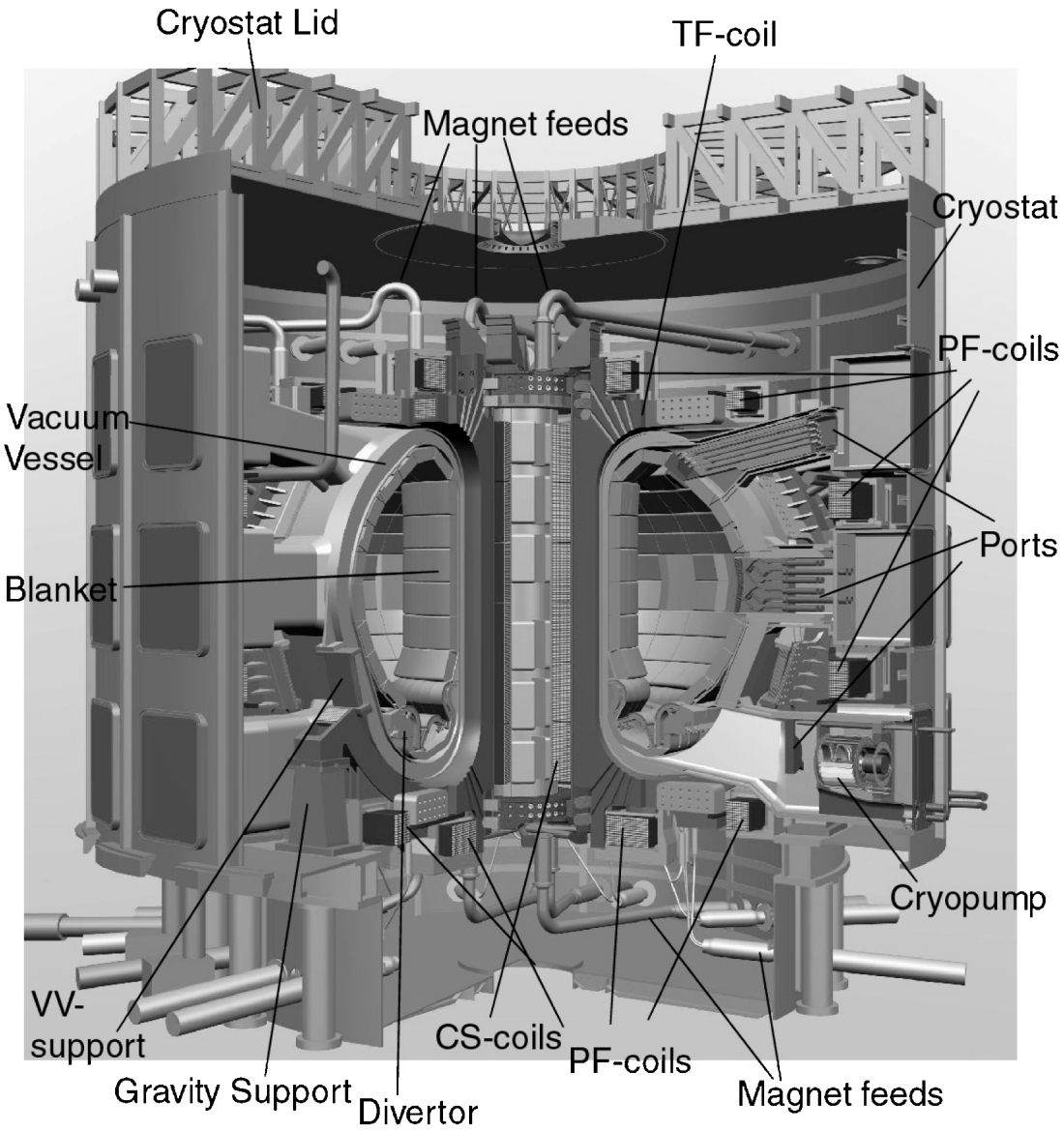

FIGURE 20 "The International Thermonuclear Experimental Reactor (ITER)."

of delivering 150 kJ on target with pulse widths on the order of 1 nsec. The National Ignition Facility (NIF) in the United States and the Laser Megajoules in France, both under construction for operation in about 2004 with full beam power and ignition experiments planned to start in 2008, are glass lasers and will focus ~2 MJ of energy on target. They should achieve ignition and energy gain of about 10, conclusively demonstrating the scientific feasibility of laser inertial fusion. The NIF is shown on Fig. 21.

At Sandia, the PBFA-II light beam device delivered several megajoules of pulsed power to lithium ion sources. They were unable to focus sufficient energy onto a target and have converted PBFA-II to a z-pinch configuration. The "Z machine" has produced very large pulses of X rays, which should be capable of driving inertial fusion targets in future experiments. The technologies for heavy ion driver inertial fusion are under development at Lawrence Berkeley National Laboratory, although there are currently no heavy ion beam experimental facilities in operation in the United States. Heavy ion beam experiments are underway at GSI in Germany. Due to their high efficiencies (~25%), good pellet coupling, and mature accelerator technology base, particle beam are attractive candidate drivers for inertial fusion. Table VI highlights the major parameters of several inertial fusion research facilities.

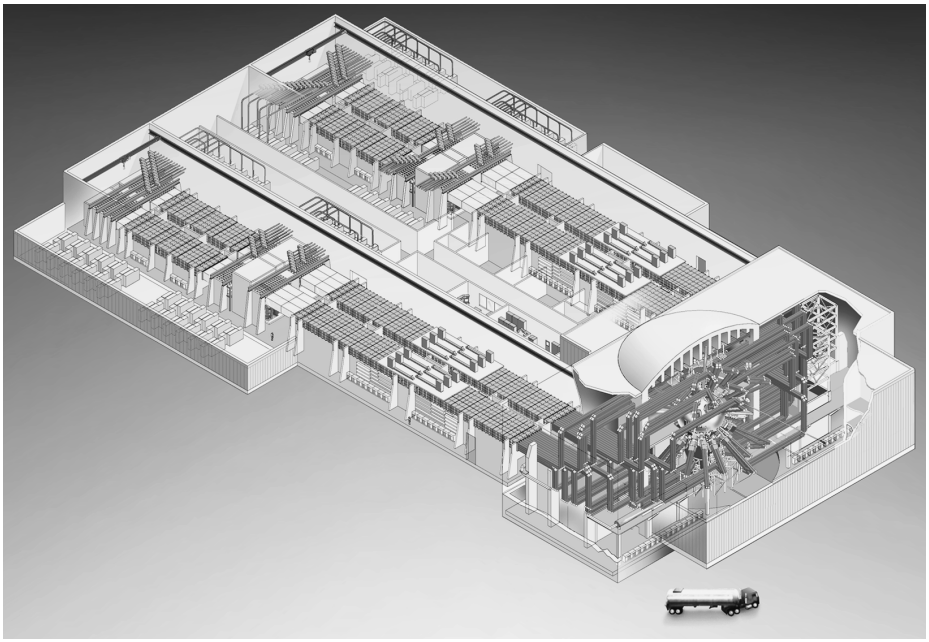

FIGURE 21 "The National Ignition Facility" (courtesy of Lawrence Livermore National Laboratory).

V. SUMMARY

Harnessing fusion power is, almost by definition, a historical imperative. The dwindling supply of fossil fuels simply will not support the long-term sustenance of the human race. The availability of cheap, plentiful fuel in the form of deuterium and other light elements can create a bright energy future, free from the constraints of embargoes and with a high degree of safety and little adverse environmental impact.

The quest for controlled fusion power attracts a wide cross section of highly talented and motivated scientists and engineers whose goal is reproducing on earth what, up until the present time, only the stars have been capable of achieving. The approaches to fusion power are varied, each with its own problems and highly leveraged payoffs. The search for the ultimate device continues, with new inventions and approaches needed before the goal of an efficient and reliable power-producing fusion reactor can be attained.

Significant progress has been made over the past decade. The physics of both magnetic and inertial confinement fusion now appear to be well enough understood to move ahead to the next series of large experiments, ITER for magnetic fusion, NIF and LMJ for inertial fusion, that will demonstrate plasma ignition and significant energy gain. Coupling this physics achievement with the technology and engineering creativity of the fusion community will provide the critical mass necessary to begin the slow but inevitable march toward commercial fusion power.

TABLE VI Major Inertial Fusion Experiments

Parameters	Nova	Omega	Nike	Z Machine	NIF
Driver type	Nd:glass laser	Nd:glass laser	KrF laser	Z-pinch	Nd:glass laser
No. of beams	10	60	44	NA	+192
Total energy (kJ)	150	40	3	4000	1800
Total power (TW)	100	60	0.75	100	500

SEE ALSO THE FOLLOWING ARTICLES

ACCELERATOR PHYSICS AND ENGINEERING • ATOMIC AND MOLECULAR COLLISIONS • ENERGY RESOURCES AND RESERVES • LASERS, ULTRAFAST PULSE TECHNOLOGY • NUCLEAR FUEL CYCLES • NUCLEAR PHYSICS • NUCLEAR REACTOR MATERIALS AND FUELS • PLASMA CONFINEMENT • PLASMA SCIENCE AND ENGINEERING • RADIATION SHIELDING AND PROTECTION • TRANSITION PROBABILITIES AND ATOMIC LIFETIMES

BIBLIOGRAPHY

Beardsley, T. (March 1999). "The way to go in," *Scientific American*.

Callen, J. D., Carreras, B., and Stambaugh, R. (January 1992). "Magnetic fusion: Stability and transport processes in tokamak plasmas," *Physics Today*.

Conn, R. W., Holdren, J. P., Sharafat, S., Steiner, D., Ehst, D. A., Hogan, W. J., Krakowski, R. A., Miller, R. L., Najmabadi, F., and Schultz, K. R. (1990). "Economic, safety and environmental prospects of fusion reactors," *Nuclear Fusion* **30**(9), 1919.

Conn, R. W. (1983). *Scientific American* **249**(4), 60–71.

Cordey, J. G., Goldston, R., and Parker, R. (January 1992). "Progress toward a tokamak fusion power reactor," *Physis Today*.

Dean, S. (ed.) (1981). "Prospects for Fusion Power," Pergamon Press, Elmsford, NY.

Dolan, T. J. (1982). "Fusion Research," Vols. 1–3, Pergamon Press, Elmsford, NY.

Dolan, T. J. (1983). *Nucl. Technol./Fusion* **4**(2).

Furth, H. (September 1945). "Energy and environment/fusion," *Scientific American*.

"Fusion's future." (February 1989). *Scientific American*.

Herman, R. (1990). "Fusion: The Search for Endless Energy," Cambridge University, New York.

Hodgson, P. (February 1993). "The promise of nuclear fusion," *Contemporary Review*.

Hogan, W. J., Coutant, J., Nakai, S., Rozanov, V. B., and Velarde, G. (principal eds.) (1995). "Energy from Inertial Fusion," International Atomic Energy Agency, Vienna.

Holdren, J. P., and Pachauri, R. K. (1992). "Energy, An Agenda of Science for Environment and Development into the 21st Century, chapter 4, Cambridge Univ. Press, Cambridge.

Kikuchi, M., Conn, R. W., Najmabadi, F., and Seki, Y. (1991). "Recent directions in plasma physics and their Impact on tokamak magnetic fusion design," *Fusion Eng. Design* **16,** 253–270.

Lindl, J. D. (1998). "Inertial Confinement Fusion: The Quest for Ignition and Energy Gain Using Indirect Drive," AIP Press, Springer-Verlag, NY.

Miyahara, A., Tawara, H., Itoh, N., Kamada, K., and McCraken, G. M. (1984). "Plasma Surface Interactions in Controlled Fusion Devices," North-Holland Publ., Amsterdam.

Rawls, J. (ed.) (1979). "Status of Tokamak Research," United States Department of Energy Report DOE/ER/0034.

Stacey, W., Jr. (1984). "Fusion: An Introduction to the Physics and Technology of Magnetic Confinement Fusion," Wiley, New York.

Stacey, W., Jr. (1981). "Fusion Plasma Analysis," Wiley, New York.

Teller, E. (ed.) (1981). "Fusion," Vol. I, Parts A and B, Academic Press, New York.

Whitley, J. B., Wilson, K. L., and Clenard, F. W., Jr. (1984). "Fusion Reactor Materials," North-Holland, Amsterdam.

Yonas, G. (August 1998). "Fusion and the Z-pinch," *Scientific American*.

Yonas, G. (1984). "Advances in inertial confinement fusion research," *Nucl. Fusion* **24,** 505–513.



Nuclear Power Reactors

Ronald A. Knief
XE Corporation

I. Overview
II. Design and Operating Requirements
III. Reactor Types
IV. Safety Features
V. Regulations

GLOSSARY

Blanket Region surrounding the fuel core of a breeder reactor that contains fertile material to increase production of new fuel.
Breeder Reactor that produces new fuel from fertile material at a faster rate than it burns fuel for energy production.
Converter Reactor that produces less new fuel from fertile material than it burns for energy production.
Coolant Liquid or gaseous medium used to remove fission heat energy from reactor fuel.
Core Region within a reactor occupied by the nuclear fuel that supports the fission chain reaction.
Critical Condition where a fission chain reaction is stable with neutron production balancing losses at a nonzero level.
Fast neutrons Neutrons of high energy, particularly those produced directly by the fission reaction.
Fertile Material, not itself fissile, capable of being converted to fissile material following absorption of a neutron.
Fissile Material capable of sustaining a fission chain reaction.
Fission Process in which a heavy nucleus splits into two or more large fragments and releases kinetic energy.
Moderator Material of low atomic mass included in a reactor for the purpose of reducing the energy of neutrons.
Multiplication Ratio of neutron production rate to neutron loss rate; value is unity for a critical system.
Reactivity Fractional change in neutron multiplication referenced to the critical condition; value is zero for a critical system.
Reactor Combination of fissile and other materials in a geometric arrangement designed to support a neutron chain reaction.
Steam cycle Method used to convert fission heat energy to steam and hence electricity [often described in terms of a primary coolant loop and, as appropriate, secondary heat transfer loop(s)].
Thermal neutrons Low-energy neutrons in thermal equilibrium with their surroundings, produced by slowing down or moderating the fast neutrons from nuclear reactions such as fission.

COMMERCIAL POWER production with nuclear energy relies on a sustained neutron chain reaction from the

fission process. Reactors produce electricity from fission, employing a variety of fuel forms, coolants, moderators, and other materials.

I. OVERVIEW

Nuclear power reactors have many similarities to conventional fossil-powered systems. All of their unique design features and operating modes result directly or indirectly from the nature of the fission chain reaction that produces the energy. These characteristics lead to several classifications appropriate for reactors. (The other major reaction for nuclear energy production, fusion, offers the prospect as a future energy source.)

A. Fission Process

When a neutron strikes a nucleus of ^{235}U, a fission reaction may occur in which the nucleus splits into two or more fission fragments, releases radiation and kinetic energy, and emits neutrons. The energy release, over 50 million times as great as from the reaction involved in "burning" a carbon atom with oxygen, is one major advantage of fission as an energy source. Another is the presence of extra neutrons, which present the possibility of a sustained chain reaction and steady energy production.

The disadvantages of the fission reaction are the particulate and electromagnetic radiations emitted at the time of fission and the radioactivity (i.e., emission of radiations over time) of the fission fragments and their products. These features lead to requirements for shielding and containment, respectively.

When the chain reaction exactly balances the rates of neutron production from fission with absorption and leakage, the system is steady and said to be *critical*. When production exceeds losses, it is supercritical and increases in power. When losses exceed production, it is subcritical and decreases in power, up to and including being shut down. All three states of criticality are necessary to nuclear power reactor operation. This status is often quantified in terms of the multiplication factor k, defined as

$$k = \frac{\text{production}}{\text{absorption} + \text{leakage}},$$

or by reactivity ρ defined as

$$\rho = (k - 1)/k.$$

Thus, $k = 1$ or $\rho = 0$ constitutes the critical condition.

A material capable of sustaining a chain reaction by itself is said to be *fissile*. Alternatively, fissile material can be fissioned by neutrons of any energy. Fissionable and fertile materials can contribute to the chain reaction. Nuclei that are *fissionable* can be fissioned by neutrons, but not necessarily neutrons of any energy (particularly, some cannot be fissioned by low-energy or thermal neutrons). *Fertile* materials on absorbing a neutron are converted to fissile nuclei.

B. Reactor Classifications

Nuclear reactors are designed to achieve a self-sustained chain reaction with a combination of fissile, fertile, and other materials. Common characteristics useful for classification purposes are

1. *Coolant*—principle heat removal medium.
2. *Steam cycle*—number of separate coolant "loops."
3. *Moderator*—material (if any) used to "slow down" the neutrons produced by fission.
4. *Neutron energy*—general energy range for the neutrons that cause most of the fissions.
5. *Fuel production*—system is referred to as a *breeder* if it produces (i.e., changes from fertile to fissile) more fuel than it consumes; it is said to be a *converter* otherwise.

The first two features relate to the current practice of converting fission energy first to heat and then to electrical energy by employing a steam cycle. Coolants include water, heavy water, gases, and liquid metal. The steam cycles may employ from one to three separate loops, including one for primary coolant circulation and one (not necessarily separate) for steam generation.

Neutrons are emitted from fission at high energy. However, very-low-energy neutrons have a higher likelihood of causing additional fission reactions. Thus, many systems employ a moderator to "slow down" these neutrons. The best moderators are of low mass, allowing maximum energy transfer through neutron collisions (e.g., the limiting case of potentially total energy transfer between a moving cue ball and a stationary billiard ball of equal mass). Typical materials used for this purpose are hydrogen, deuterium (heavy hydrogen), and carbon. The moderator and coolant may be the same (e.g., water) or may be separate materials (e.g., gaseous coolant and solid graphite moderator). Neutrons with low enough energies to be roughly in thermal equilibrium with the surrounding materials are said to be thermal neutrons. Neutrons at or near fission energies are fast neutrons. Fast reactors avoid the use of moderators, such as with a metal coolant like sodium, instead of one of the moderating materials identified above.

Any reactor that contains fertile species ^{232}Th, ^{238}U, or ^{240}Pu produces some amount of new fissile fuel. Breeder reactors actually produce more fuel than they consume. Converter reactors produce lesser amounts of new fuel.

The world's six major reactor types are

1. boiling water reactor (BWR)
2. pressurized water reactor (PWR), including several similar western designs and the unique Russian VVER PWR
3. heavy-water-moderated reactor (HWR), including the pressurized heavy-water reactor (PHWR)
4. gas-cooled reactor (GCR), including the high-temperature gas-cooled reactor (HTGR)
5. light-water cooled graphite moderated reactor (LGR), including the Russian RBMK pressure-tube graphite reactor (PTGR)
6. breeder reactor, including the liquid-metal fast-breeder reactor (LMFBR)

Data for representative nuclear steam supply systems (NSSS) (i.e., the portions related specifically to the use of nuclear fission as the energy source) for the six of these reactor types (including two PWR—a Westinghouse system representative of the western units and a Russian VVER) are provided in Table I. The section labeled "general" describes the reactor types in terms of the five classifications identified at the beginning of this section (e.g., the PTGR is a single-loop, light-water-cooled, graphite-moderated, thermal, converter reactor.)

The world-wide nuclear electric generating capacity for each country by reactor type is shown in Table II.

II. DESIGN AND OPERATING REQUIREMENTS

Nuclear power reactors are complex systems whose design represents a balance among conflicting requirements. Principal among these requirements are nuclear design, materials, thermal hydraulics, economics, and control and safety.

The nuclear design seeks to match fissile and fertile constituents with appropriate coolants and moderator (if any) to optimize the neutron economy of the chain reaction and production of new fuel. Materials concerns focus on chemical compatibility of components, thermal and radiation stability, and overall mechanical strength. One especially important requirement is that the fuel maintain its structural integrity throughout 4 years or more of in-place fission chain reaction, since unlike other energy production cycles, the fuel is not literally "burned up."

Thermal-hydraulic goals include spatially uniform power density distributions and appropriate match of coolant conditions to energy generation. Economics focus on minimizing overall costs (i.e., initial capital outlay, operating and maintenance costs, and fuel charges), including attention to reliability and thermal conversion efficiency.

Control and safety considerations include some interaction with each of the previous areas. Power reactors must maintain the critical condition, increase and decrease power, and adjust to long-term changes such as the conflicting effects from breeding new fuel, depleting existing fuel, and building in waste products. The desired neutron balance is maintained predominately by adjusting neutron absorption, (by using materials designed to remove neutrons from, or "poison," the chain reaction), although some designs also change neutron production by on-line fuel exchange. Absorption may depend on a combination of solid moveable control rods, soluble poisons in the coolant or moderator, and fixed burnable poisons designed to deplete or be "burned out" by the continuing neutron population.

Routine control strives to make the power density as uniform as possible, while allowing for power changes. In most designs, control-rod movement is used with groups selected for symmetry to maintain uniform power distribution. Measures are instituted to restrict the speed of movement and reactivity worth of individual rods or groups of rods to prevent excessively rapid power increase. Similarly, the design intends to minimize the likelihood of inadvertent control rod withdrawal.

Safety concerns are addressed through a protective system whereby the control rods may be inserted quickly; that is, they scram or trip through gravity drop or gas pressure, when certain predetermined parameter limits (e.g., on pressure, temperature, flow, or power levels) are exceeded. Overall design with negative feedback mechanisms, so that power increases tend to be self-terminating, is another important goal. Fuel temperature and coolant/moderator temperature effects are examples when a power increase drives up temperatures and the temperatures in turn cause the reaction to slow somewhat.

Another important safety feature is multiple-barrier containment of fission products. As may be observed for each reactor type described in the remainder of this article, these barriers include the fuel particles, surrounding cladding, the coolant system boundary, and a containment structure.

One important example of tradeoffs among the design goals is seen in thermal-reactor fuel assemblies whose pin arrangement determines the characteristics of the chain reaction, economics, and heat removal. The chain reaction is enhanced by optimum spacing of the fuel in "lumps" with moderator interspersed so that neutrons from fission will undergo a number of scattering collisions for slowing down prior to reentering the fuel; too little and too much spacing can both be detrimental. The extent of slowing down also determines the amount of conversion of fertile material and the overall energy production possible

TABLE I Characteristics for Seven Representative Nuclear Steam Supply Systems[a]

	BWR	PWR	VVER PWR	PHWR	HTGR[b]	PTGR	LMFBR
Reference design							
Manufacturer	General Electric	Westinghouse	(Former Soviet Union)	Atomic Energy of Canada, Ltd.	General Atomic	(Former Soviet Union)	Novatome
System (station)	BWR/6	(Sequoyah/ SNUPPS)	VVER-1000	CANDU-600	(Fulton)	RBMK-1000	(Superphenix)
General							
Steam cycle							
Loops	1	2	2	2	2	1	3
Primary coolant	H_2O	H_2O	H_2O	D_2O	He	H_2O	Liquid Na
Secondary coolant	—	H_2O	H_2O	H_2O	H_2O	—	Liquid Na/H_2O
Moderator	H_2O	H_2O	H_2O	D_2O	Graphite	Graphite	—
Neutron energy	Thermal	Thermal	Thermal	Thermal	Thermal	Thermal	Fast
Fuel production	Converter	Converter	Converter	Converter	Converter	Converter	Breeder
Energy conversion							
Gross thermal power, MW(th)	3579	3411	3200	2180	3000	3200	3000
Net electrical power, MW(e)	1178	1150	953	638	1160	1000	1200
Efficiency, %	32.9	33.7	33.3	29.3	38.7	31.2	40
Heat transport							
Primary loops and pumps	2	4	4	2	6	2/8	4
Intermediate loops	—	—	4	—	—	—	8
Steam generators	—	4	—	4	6	—	8
Steam gen. type	—	∪-tube	Horizontal	∪-tube	Helical coil	—	Helical coil
Fuel							
Particles	Short, cyl. pellets	Short, cyl. pellets	Short, cyl. pellets	Short, cyl. pellets	Coated micro-spheres	Short, cyl. pellets	Short, cyl. pellets
Chemical form	UO_2	UO_2	UO_2	UO_2	UC/ThC	UO_2	Mixed UO_2/PUO_2
Fissile	2–5 wt. % ^{235}U	2–5 wt. % ^{235}U	2–5 wt. % ^{235}U	Natural uranium	93 wt. ^{235}U %	1.1–2.4 wt.% ^{235}U	15–18 wt. % Pu (core)
Fertile	^{238}U	^{238}U	^{238}U	^{238}U	Thorium	^{238}U	^{238}U (core + blanket)
Pins	Pellet stacks in Zr–alloy tubes	Pellet stacks in Zr–alloy tubes	Pellet stacks in Zr–alloy tubes	Pellet stacks in Zr–alloy tubes	Microspheres in graphite sticks	Pellet stacks in Zr–alloy tubes	Pellet stacks in stainless steel tubes
Assembly	8 × 8 Square pin array	17 × 17 Square pin array	331 Hexagonal pin array	37-Pin cylindrical array	Hexagonal graphite block[b]	2 × 18 pin cylindrical array	271-Pin hexagonal array
Core							
Axis	Vertical	Vertical	Vertical	Horizontal	Vertical	Vertical	Vertical
Assemblies on axis	1	1	1	12	8	2	1
Assemblies radially	748	193	151	380	493	1661	364 (core), 233 (blanket)
Performance							
Equil. burnup, MWD/T	27,500	27,500	25–41,000	7500	95,000	18,500	100,000
Refueling sequence	$\frac{1}{4}$/yr	$\frac{1}{3}$/yr[c]	—	Continuous, online	$\frac{1}{4}$/yr[b]	on-line	Variable
Thermal hydraulics							
Primary system							
Pressure, MPa	7.17	15.5	16.5	10.0	4.90	7.2	0.1
Inlet temp., °C	278	292	290	267	318	270	395
Average outlet temp., °C	288	325	322	310	741	284	545

continues

TABLE I (*Continued*)

	BWR	PWR	VVER PWR	PHWR	HTGR[b]	PTGR	LMFBR
Core flow, Mg/sec	13.1	18.0	21.1	7.6	1.42	10.4	16.4
Volume, l	—	3.36×10^5		1.20×10^5	(9550 kg)		(3200 Mg)
Secondary system							Na/H_2O
Pressure, MPa	—	6.89	6.4	4.7	17.2	—	0.1/17.7
Inlet temp., °C	—	227	289	187	188	—	345/235
Outlet temp., °C	—	285	322	260	513	—	525/487
Power density							
Core ave., kW/l	54.1	105	111	12	8.4		280
Fuel ave., kW/l	54.1	105		60	44		280
Linear heat rate							
Core ave., kW/m	19.0	17.8	17.6	25.7	7.87		29
Core max., kW/m	44.0	42.7		44.1	23.0	29	45
Design peaking factors							
Radial	1.4			1.21			
(Total)		(2.5)			(2.9)		(1.55)
Axial	1.6			1.41			
Moderator	Same as primary coolant	Same as primary coolant	Same as primary coolant	D_2O	Graphite blocks[b]	Graphite	—
Volume, l				2.17×10^6			
Inlet temp., °C				43			
Outlet temp., °C				71			
Reactivity control							
Control rods							
Geometry	Cruciform	Rod clusters	Rods	Rods	Rod pairs	Rods	Hexagonal pin bundles
Absorber material	B_4C	Ag–In–Cd	Boron	Various	B_4C/graphite		B_4C
Burnable poison	Gd in fuel pellets	Borosilicate glass	B–Zr	—	B_4C/graphite		—
Other systems	Voids in coolant	Soluble boron		H_2O/Various	Reserve shutdown		3-Bundle secondary
Reactor vessel							
Inside dimensions, m	6.05D × 21.6H	4.83D × 13.4H		7.6D × 4L	11.3D × 14.4H	0.088 × 8H tubes	21D × 19.5H
Wall thickness, mm	152	224		28.6	(4.72 m minimum)	4	25
Material	Stainless-steel-clad carbon steel	Stainless-steel-clad carbon steel		Stainless steel	Prestressed concrete	Zr/Nb alloy	Stainless steel
Other features				Pressure tubes	Steel liners	Pressure tubes	Pool-type

[a] Data summarized from Knief, R. A. (1992). "Nuclear Engineering," Hemisphere, Washington, DC.
[b] Parameters are for a large conceptual design; the smaller German THTR, or "pebble-bed" reactor, uses fuel microspheres in 6-cm-diameter graphite spheres with on-line refueling strategy.
[c] Design values; most reactors currently moving from 12 mo. to 1B or 24 mo. refueling cycles.

from a given amount of fuel. Spacing and coolant flow rate establish heat-removal characteristics (including temperature effects on the fuel's multiplication factor). Final dimensions generally represent a best-estimate balance among these and other competing concerns.

III. REACTOR TYPES

The major reactor types are identified in Section I with representative data provided in Table I. General descriptions of these systems follow. The principal focus is on the steam cycle, fuel assemblies, reactivity control, and the protective system. General safety-related functions are summarized separately in the next section.

A. Light-Water Reactors

Two light-water reactor (LWR) systems—boiling-water reactor (BWR) and pressurized-water reactor (PWR)—employ ordinary ("light") water as coolant and moderator. The former design produces steam through a direct cycle (Fig. 1), while the latter uses an intermediate steam-generator heat exchanger to maintain an all-liquid

TABLE II Worldwide Nuclear Generating Capacity by Reactor Type and Summary of Reactor Electrical Performance[a,b,c]

Country	Reactors operable		Reactors under construction		Reactors reasonably firmly planned		1990 reactor performance		1998 reactor performance	
	No.	MWe	No.	MWe	No.	MWe	TWe-hr	Percent of electrical	TWe-hr	Percent of electrical
Argentina							7.3	16.9	6.9	10.0
PHWR	2	1005	1	745						
Armenia							211.5[d]	12.2[d]	1.42	24.7
VVER	1	408								
Belgium							40.4	60.2	43.9	55.2
PWR	7	5836								
Brazil							2.1	1.0	3.3	1.1
PWR	1	657	1	1309						
Bulgaria							13.5	35.7	15.5	41.5
VVER	6	3760								
Canada							67.1	14.4	67.5	12.4
PHWR	14	10,915								
China							—	—	13.5	1.2
PWR	3	2268	4	3200						
PHWR			2	1400						
VVER					2	2000				
			6	4600						
Cuba										
PWR			2	880						
Czech Republic							24.6[e]	28.5[e]	28.5	20.5
VVER	4	1752	2	1962						
Finland							18.1	35.0	21.0	27.4
VVER	2	1020								
BWR	2	1630								
	4	2650								
France							298.0	75.0	368.4	75.8
PWR	57	64080	1	1516						
FBR	1	250								
	58	64330								
Germany							139.1	33.1	145.2	28.3
PWR	13	15,426								
BWR	6	6,643								
	19	22,069								
Hungary							13.7	50.0	13.1	35.6
VVER	4	1840								
India							6.2	2.4	10.2	2.5
BWR	2	320								
PHWR	8	1520	6	1880	6	1880				
VVER			2	2000	2	2000				
	10	1840	8	3880	8	3880				
Iran										
VVER			2	2000						
Japan							186.4	27.1	306.9	35.9
PWR	23	19,366								
BWR	28	25,551	2	1925	4	4875				

continues

TABLE II (*Continued*)

Country	Reactors operable		Reactors under construction		Reactors reasonably firmly planned		1990 reactor performance		1998 reactor performance	
	No.	MWe	No.	MWe	No.	MWe	TWe-hr	Percent of electrical	TWe-hr	Percent of electrical
FBR	1	280								
Other	1	165								
	53	35,362								
Kazakhstan							211.5[d]	12.2[d]	0.1	0.2
FBR	1	150								
Korea, North										
PWR			2	2000						
Korea, South							52.9	49.1	85.2	41.4
PWR	11	9995	3	3050	10	11,200				
HWR	3	2094	1	700						
Other/unknown					2	1,000				
	14	12,089	4	3750	12	12,200				
Lithuania							211.5[d]	12.2[d]	12.3	77.2
RBMK	2	2600								
Mexico							2.3	4.1	8.8	5.4
BWR	2	1329								
Netherlands							3.3	4.9	3.6	4.1
PWR	1	481								
BWR	1	58								
	2	539								
Pakistan							0.4	1.1	0.3	0.7
HWR	1	137								
PWR			1	325						
Poland							??	??		
VVER	[4]	[1860]								
Romania							??	??	4.9	10.4
HWR	1	706								
Russian Federation							211.5[d]	12.2[d]	95.4	13.1
VVER	13	9,594	3	2630	2	1260				
RBMK	11	11,000	1	1000						
FBR	4	48			2	1600				
Other/unknown	1	600			1	70				
	29	21,242	4	3630	5	2930				
Slovakia							24.6[e]	28.5[e]	11.4	43.8
VVER	5	2200	1	440						
Slovenia							4.4[f]	5.4[f]	4.8	38.3
PWR	1	652								
South Africa							8.5	12.4	13.6	7.25
PWR	2	1930								
Spain							54.3	35.7	56.7	31.7
PWR	7	5950								
BWR	2	1450								
	9	7400								

continues

TABLE II (*Continued*)

Country	Reactors operable No.	Reactors operable MWe	Reactors under construction No.	Reactors under construction MWe	Reactors reasonably firmly planned No.	Reactors reasonably firmly planned MWe	1990 reactor performance TWe-hr	1990 reactor performance Percent of electrical	1998 reactor performance TWe-hr	1998 reactor performance Percent of electrical
Sweden							65.3	46.0	70.0	45.8
PWR	3	2,835								
BWR	9	7,603								
	12	10,438								
Switzerland							22.3	42.6	24.4	41.1
PWR	3	1772								
BWR	2	1507								
Unknown	5	3279								
Taiwan							31.5	38.3	??	??
PWR	2	1902								
BWR	4	3242	2	2700						
	6	5144								
Turkey										
Unknown					2	2000				
Ukraine							211.5[d]	12.2[d]	70.6	45.4
VVER	13	11,808	2	2000						
RBMK	1	1,000								
	14	12,808								
United Kingdom							60.8	20.0	91.1	27.1
PWR	1	1,258								
Magnox	20	3,786								
AGR	14	9,164								
	35	15,208								
United States							576.8	20.6	673.7	18.7
PWR	69	68,577								
BWR	35	33,156								
	104	101,733								

Totals						
Reactor type						
PWR	204	202,985	12	11,400	10	11,200
VVER PWR	48	32,382	10	9,032	6	5,260
BWR	92	82,431	4	4,625	4	4,875
PHWR	29	16,377	11	5,431	6	1,880
Magnox	20	3,786				
AGR	14	9,164				
RBMK	14	14,600	1	1,000		
FBR	4	1,280			2	1,600
Other/unknown	5	213			5	3,070
Total	430	363,218	38	31,488	33	27,885

[a] From *Nuclear Engineering International World Nuclear Industry Handbook 1999*, November 1998.

[b] Operable status as of end of 1997, under-construction and planned status as of end of 1998.

[c] Key: BWR, boiling water reactor; FBR, fast-breeder reactor; Magnox and AGR, gas-cooled reactors; [P]HWR, heavy-water reactor; RBMK, light-water-cooled, graphite moderated reactor; and PWR and VVER, pressurized water reactors.

[d] Values for Russia, which in 1990 included Armenia, Kazakhstan, Lithuania, Russia, and the Ukraine.

[e] Value for Yugoslavia, which in 1990 included Slovenia.

[f] Value for Czechoslavakia, which in 1990 included the Czech Republic and Slovakia.

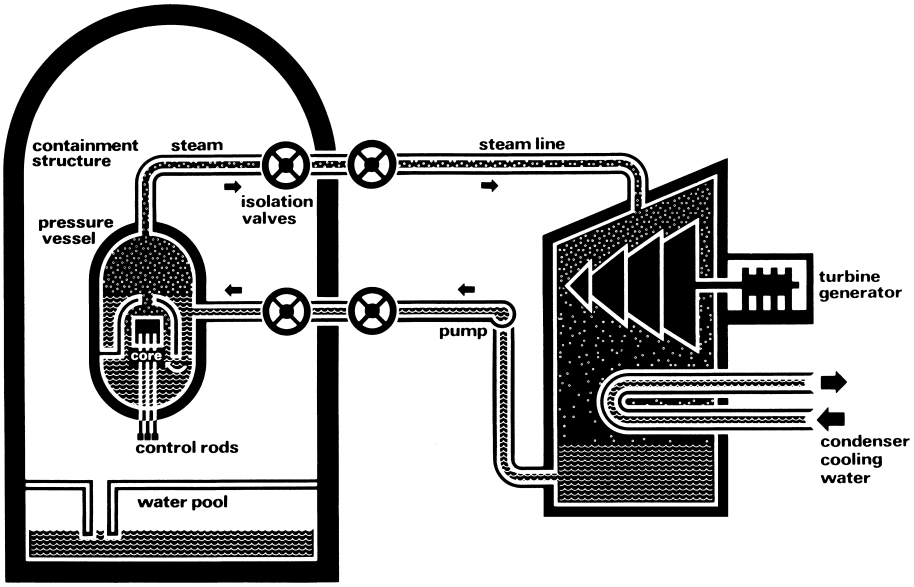

FIGURE 1 Steam cycle for boiling water reactor (BWR). [Courtesy of Atomic Industrial Forum.]

primary loop and produce steam in a separate secondary loop (Fig. 2).

The nature of the water coolant/moderator results in similarities between the two LWR designs. The fuel is 2–5 wt. % enriched ^{235}U in uranium dioxide fuel pellets clad in sealed zirconium-alloy tubes. Fuel assemblies consist of rectangular arrays of fuel pins with regular spacing.

Since the LWR designs rely on liquid water for moderating neutrons, maximum operating temperatures must remain well below the 706°F (374°C) critical temperature at which pressure increases dramatically and liquid cannot exist. "Modern" steam conditions nominally at 1000°F (540°C), typical of fossil-fueled plants, thus are not available; special "wetsteam" turbines must be employed.

1. Boiling-Water Reactors

The direct-cycle boiling-water reactors (BWR) are manufactured by General Electric Company in the United States. ABB-Atom in Sweden, AEG in the United Kingdom, Kraftwerk Union in West Germany, and Hitachi and Toshiba in Japan. Employing the cycle shown in

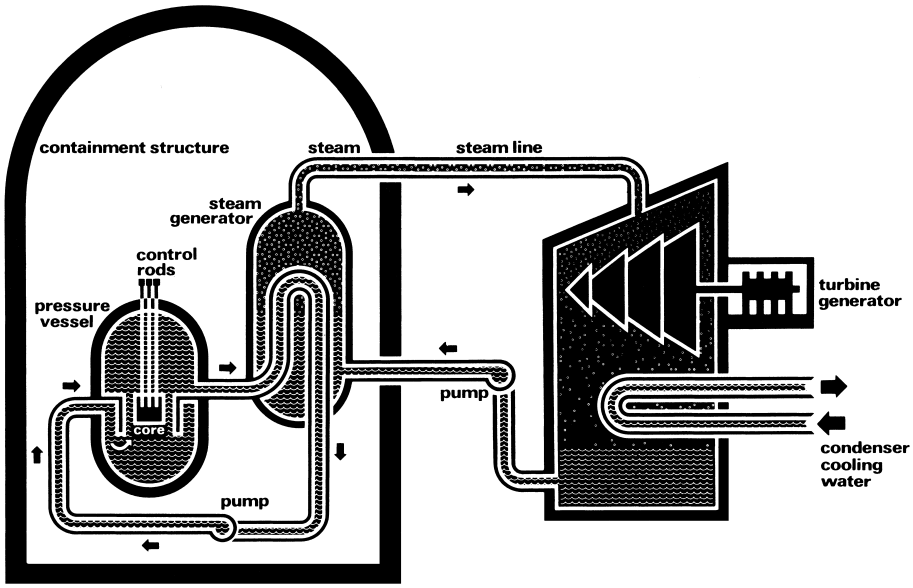

FIGURE 2 Steam cycle for pressurized water reactor (PWR). [Courtesy of Atomic Industrial Forum.]

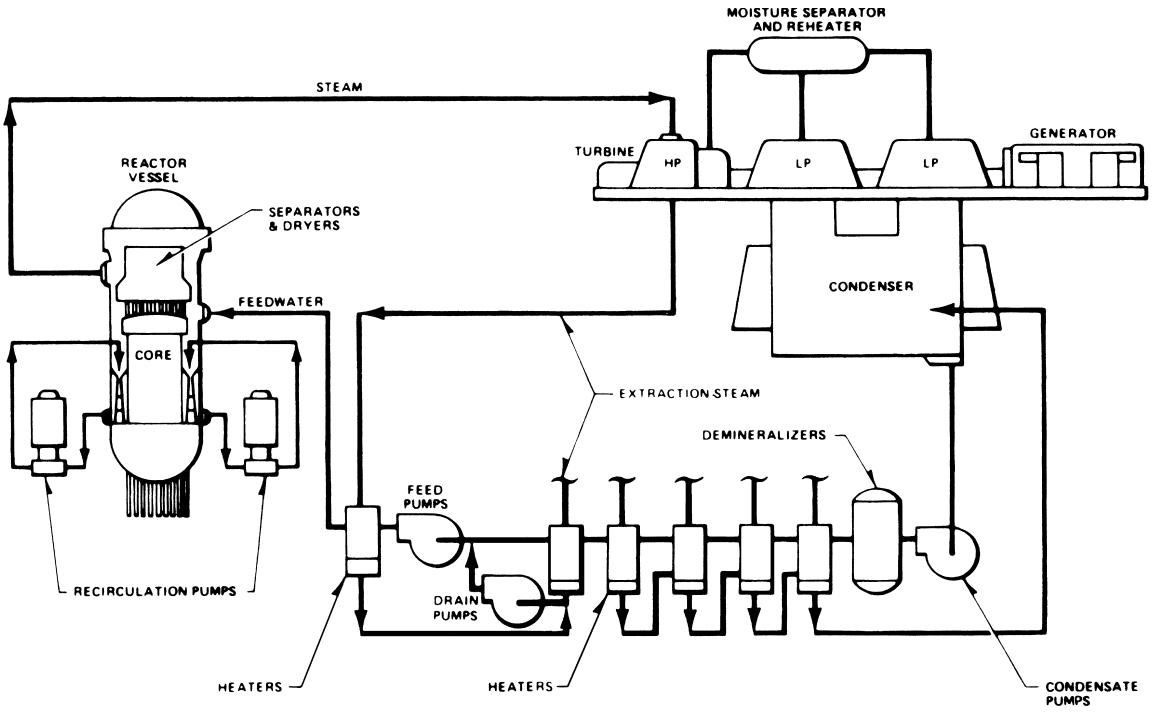

FIGURE 3 Typical steam cycle schematic diagram for boiling water reactor (BWR). [Courtesy of General Electric Company.]

concept by Fig. 1 and in more detail in Fig. 3, feedwater enters the steel reactor vessel, is heated by the fission chain reaction occurring in the fuel pins, and leaves the vessel as steam. The high- and low-pressure turbine stages are employed in concert with the multiple heaters and condenser to enhance energy-conversion efficiency. The more recent BWR designs use jet pumps to recirculate a fraction of the feedwater flow for better control.

Fuel bundles for the BWR appear as shown in Fig. 4. The 7×7 to 9×9 square array of fuel pins is surrounded by a metal fuel channel, which prevents the water/steam mixture from moving between bundles (and potentially resulting in too little liquid in some). Fuel bundles may contain pins of several different enrichments (Fig. 5). The reactor fuel core consists of up to 800 fuel bundles.

Reactivity control for routine operation is implemented through a combination of control rods and coolant flow adjustment. The bottom-mounted control rods (indicated below the reactor vessel in Fig. 3) are made of long boron carbide filled pins in a cruciform ("cross") shape that fits between four fuel assemblies as shown in Fig. 5.

Flow adjustment can provide another effective control method, since the water changes density with temperature. At low temperature, the dense water is very effective at moderating neutrons, and thereby encourages fission. With increased temperature, the density decreases (or, equivalently, void content increases as steam is being produced), causing a reduction in moderation and fission rate. Thus, if flow rate is increased, energy removal can be increased without a net change in coolant temperature with a resulting increase in power generation. In practice, power-level changes of up to 40% may be accomplished by flow control.

Longer-term reactivity control is accomplished using burnable poisons (e.g., "curtains" of boron between fuel assemblies or gadolinium poisons fabricated into the fuel itself) and gradual withdrawal of inserted control rods over core lifetime. Reactor scram or trip is accomplished by using gas pressure to insert all of the bottom-mounted control rods into the core.

2. Pressurized-Water Reactor

The two-loop pressurized-water reactors (PWR) have been manufactured by Westinghouse, ABB Combustion Engineering, and Babcock & Wilcox in the United States; Framatome in France; Brown Boveri, Kraftwerk Union, and Seimens in Germany: Mitsubishi in Japan; and Atommash in the USSR (now Russia). Water in the primary loop (Fig. 2) is maintained as liquid by using high pressure. Water enters the reactor vessel (Fig. 6) at the inlet nozzle, flows downward along the inner vessel wall, is distributed at the lower vessel plate, flows up through the fuel assemblies gaining heat energy, and exits at the outlet nozzle.

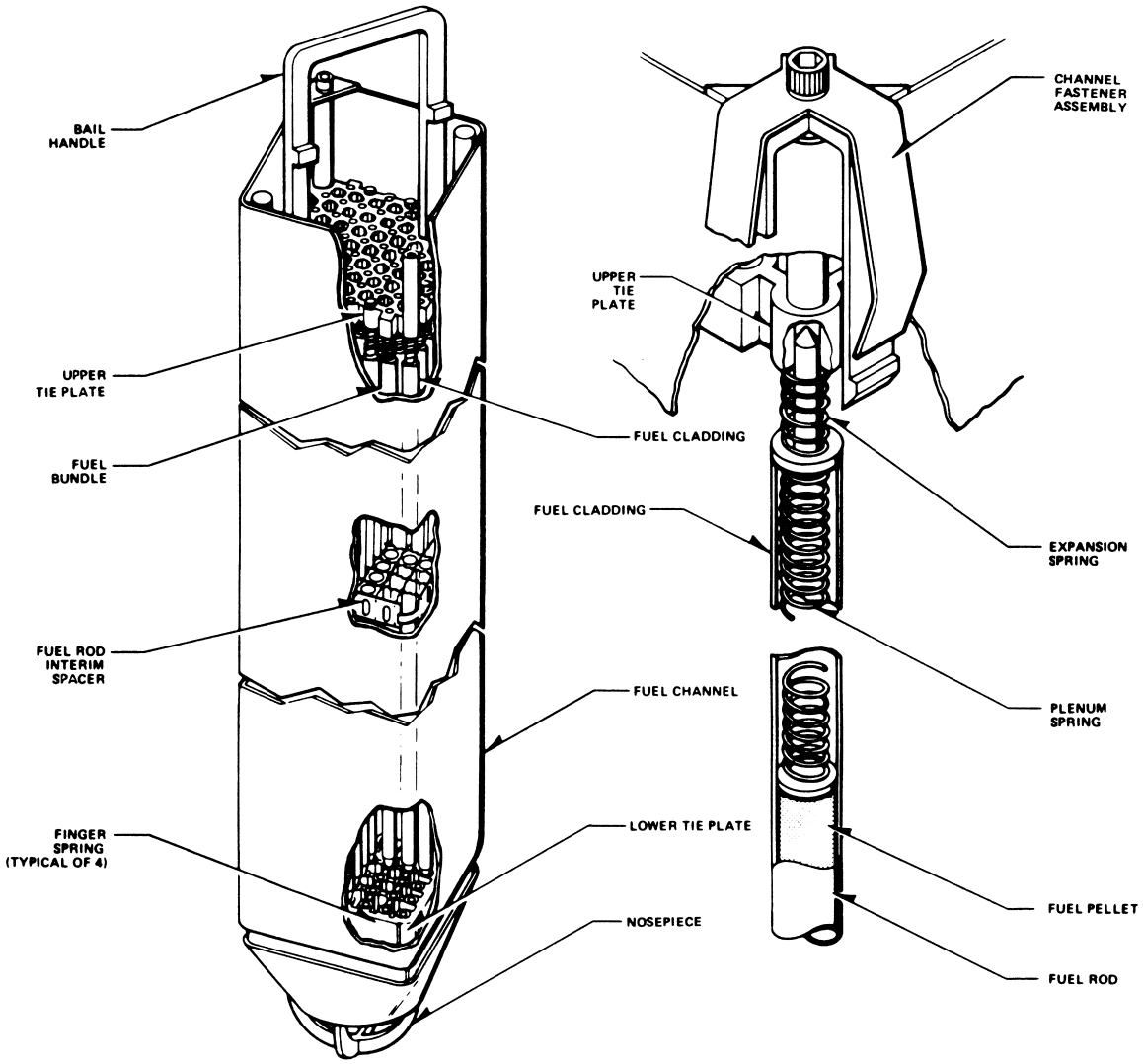

FIGURE 4 Typical fuel assembly for boiling water reactor. [Courtesy of General Electric Company.]

Energy from the primary loop is extracted and converted to steam by two to four U-tube Fig. 7), once-through (B&W), or horizontal (Russian VVER) steam generators. Multiple turbine stages, heaters, and a condenser are employed as for the BWR (Fig. 3). A *pressurizer* with a steam–water interface is used to maintain the sensitive pressure/temperature balance in the primary system by using heaters to make more steam and increase pressure or spraying cool water to condense steam and reduce pressure.

Fuel assemblies for the PWR are of 14×14 to 17×17 square fuel pin arrays (Fig. 8) or a hexagonal array of up to 331 pins (Russian VVER). They are not enclosed in a fuel channel (in part because the single-phase primary fluid is better behaved than the BWR's boiling coolant). These assemblies also have unoccupied pin locations, which can accommodate control rods, burnable poisons, or instruments. The large PWR reactor cores consist of from 150 up to 200 or more fuel bundles.

Reactivity control is accomplished mainly with soluble poison in the form of boric acid assisted by control rods. The boron concentration is adjusted to match general changes from fuel burnup, conversion of fertile material, and depletion of burnable poisons. Control-rod assemblies consist of five to 24 "fingers," made of boron carbide or of a silver–indium–cadmium mixture, which move in channels within the fuel assemblies (e.g., as shown in Fig. 8). A small symmetric group of rods is generally inserted a short distance into the fuel and then moved as needed to compensate for routine power fluctuations.

Scram or trip is accomplished by dropping the top-mounted rods (Fig. 6) into the core under the influence

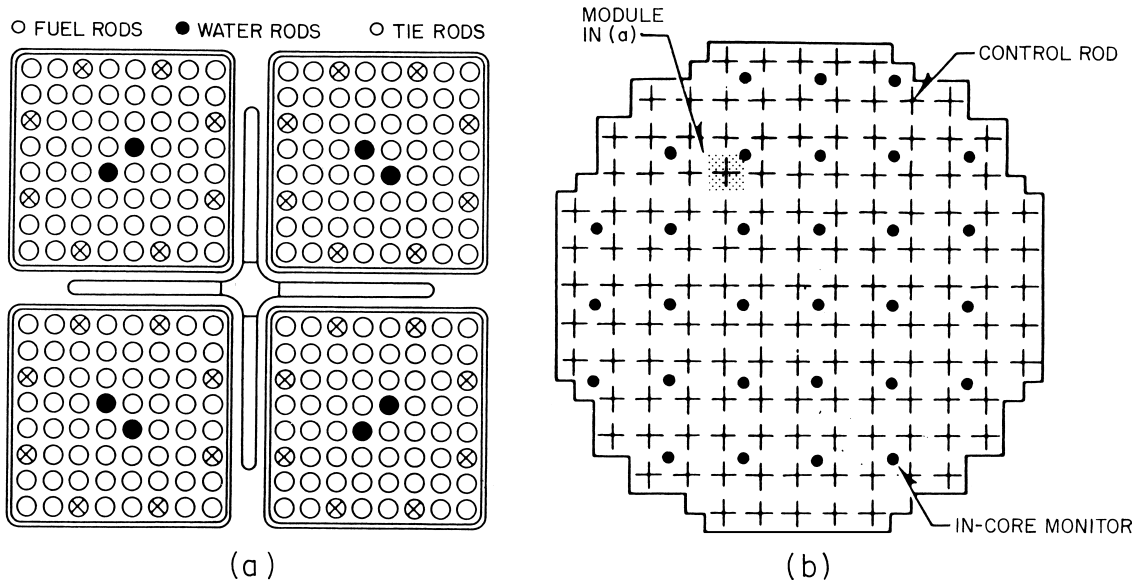

FIGURE 5 Core fuel module (a) and control rod pattern (b) for typical boiling water reactor. [Courtesy of General Electric Company.]

of gravity. The rods are mounted to their drives by electromagnets so that interruption of the current (from power failure or a designated indication that parameters are outside of accepted limits) causes the rods to fall.

B. Heavy-Water Reactors

Ordinary hydrogen in the form of water is the most effective material for reducing neutron energy, but it also absorbs some of the neutrons that could otherwise participate in the chain reaction. Thus, deuterium as heavy water, which requires more collisions for a given energy change but exhibits much less absorption, is also a useful reactor moderator. Deuterium, existing in nature in a ratio of 1:400 with ordinary hydrogen, requires isotopic enrichment prior to use (as does ^{235}U in uranium for many of the reactor applications).

Heavy-water reactors (HWR) have been manufactured by Atomic Energy of Canada Limited (AECL) and in the United Kingdom, West Germany, India and Japan. Pressure-vessel designs (similar to the PWR) employ the same heavy water as coolant and moderator. Pressure-tube designs use heavy water in a moderating volume with a separate coolant, which could be heavy water, ordinary water, or an organic liquid. The pressurized heavy-water reactor (PHWR) in the form of the popular Canadian deuterium uranium (CANDU) system is considered below.

The steam cycle is two-loop (Fig. 9), like the PWR, with the primary pressurized heavy-water loop transferring heat energy to a loop of ordinary water for steam production. A major difference, however, is that the primary fluid is distributed among several hundred pressure tubes which pass through a large calandria vessel (Fig. 10) containing separate heavy-water moderator. The coolant is actually collected in two separate loops, with adjacent tubes being part of different loops.

The fuel assemblies consist of natural (i.e., 0.711 wt.% ^{235}U) uranium dioxide fuel pellets in zirconium clad, similar to LWR fuel. However, short, cylindrical bundles of fuel pins (Fig. 11) allow a unique on-line fueling scheme whereby a machine attaches to each end of a single coolant tube and inserts one fuel bundle while removing another.

A major portion of the reactivity control is accomplished by on-line fueling, which is required to compensate for the low reactivity inherent in the natural uranium fuel. Routine operating adjustments and power shaping are accomplished with poison control rods or introduction of ordinary water (which absorbs more neutrons than heavy water) into special chambers. Other control rods are available for reactor trip. The separation of the coolant and moderator volumes also provides the possibility for moderator "dumping" as an emergency shutdown method.

C. Gas-Cooled Reactors

The world's first research reactor used natural uranium, graphite moderator, and natural-circulation air cooling. Subsequent systems have also used graphite with natural or enriched uranium and with carbon dioxide or helium coolant. Various commercial gas-cooled reactors (GCR) have operated in France, the United Kingdom, the United States, and West Germany. The U.K. still has a number of CO_2-based gas-cooled reactors, split between Magnox

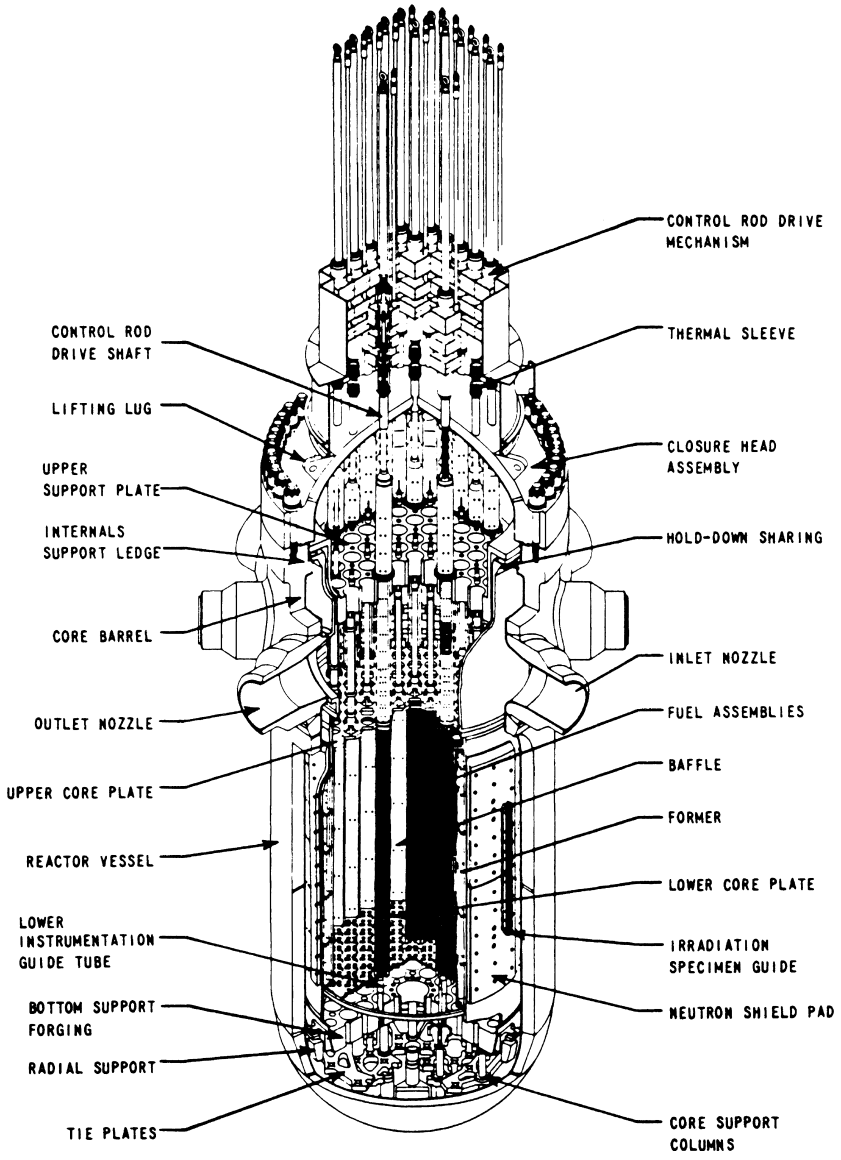

FIGURE 6 Reactor pressure vessel for a typical pressurized-water reactor. [Courtesy of Westinghouse Electric Company.]

(natural uranium fuel) and Advanced Gas Reactor (AGR) (slightly enriched uranium fuel) designs. Two versions of the helium-cooled high temperature gas-cooled reactor (HTGR) developed by the United States and Germany are described below.

The HTGR steam cycle (Fig. 12) employs a primary loop of helium, heat exchangers, and pumps contained within a prestressed concrete reactor vessel (PCRV) (two versions of which are shown in Fig. 13), and a steam loop. Since the coolant is single-phase gas, no pressurizer is required (in contrast to the two-loop water-cooled designs). The nature of the coolant also provides the prospect for direct conversion through a gas turbine.

Fuel for the HTGR consists of small microspheres of uranium or thorium carbide (UC/ThC) with coatings of graphite and/or silicon carbide [Fig. 14(a)]. The uranium microspheres, enriched to 20–93 wt.%, may be mixed with separate thorium microspheres to an effective fissile enrichment of about 5 wt.%.

In the United States "prismatic" HTGR system, the microsphere mixture is formed into roughly finger-sized sticks with a carbon-resin binder. The sticks are then loaded into large hexagonal graphite blocks with interspersed coolant holes [Fig. 14(b)]. The blocks are stacked several high and in a roughly cylindrical arrangement to form the reactor core [Fig. 13 (a)].

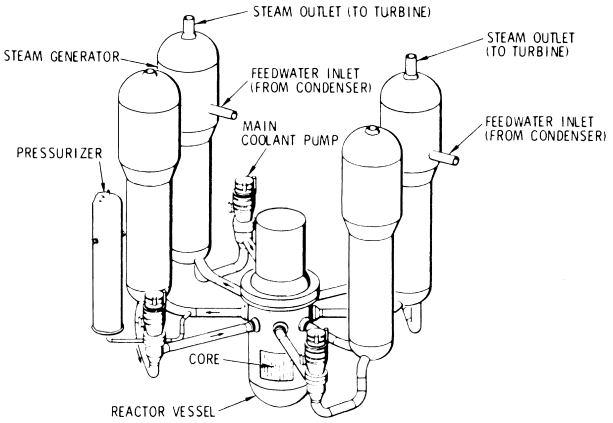

FIGURE 7 Four U-tube steam-generator primary loop configuration for a pressurized-water reactor. [Courtesy of Westinghouse Electric Company.]

Another version of the HTGR, the German thorium high-temperature reactor (THTR), forms the microspheres into a spherical shape and coats them with hard, thick graphite layers [Fig. 14(c)]. The core is then formed by loading the spheres into a hopper in a PCRV [Fig. 13(b)], from which fueling and defueling can be accomplished on-line. This design feature has led to the designation "pebble bed" reactor.

Reactivity control in the prismatic design depends on control rods for routine and shutdown functions. Burnable poisons may be used for long-term reactivity control. A reserve shutdown system consisting of small boron carbide balls backs up the primary systems.

The THTR has minimal excess reactivity due to its ability to change fuel on-line. Control rods provide the means for routine operational adjustments.

D. Light-Water Graphite Reactors

Light-water-cooled graphite-moderated reactors (LGR) were among the first systems used for purposes of research, fuel conversion, and power production. A small Soviet unit of this type is credited with generating the first commercial electricity. Current commercial use is limited to the Soviet RBMK pressure-tube graphite reactors (PTGR). The Chernobyl reactor—the site of the serious 1986 accident—was of this type.

The PTGR uses a direct steam cycle with boiling-water coolant like the BWR (Fig. 1). Its pressure-tube design

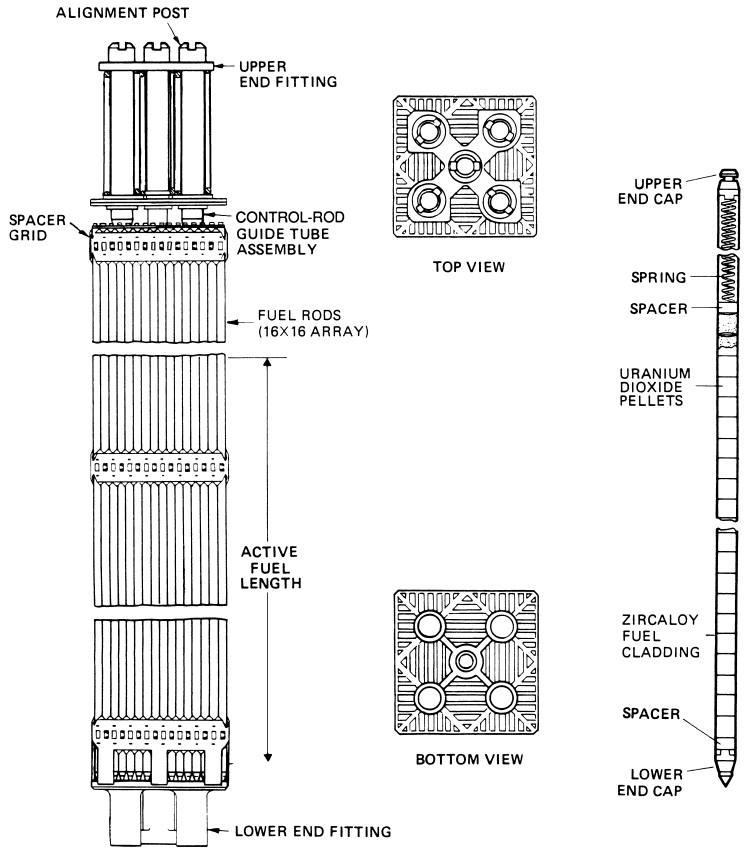

FIGURE 8 Typical fuel assembly for a pressurized-water reactor. [Courtesy of Combustion Engineering, Inc.]

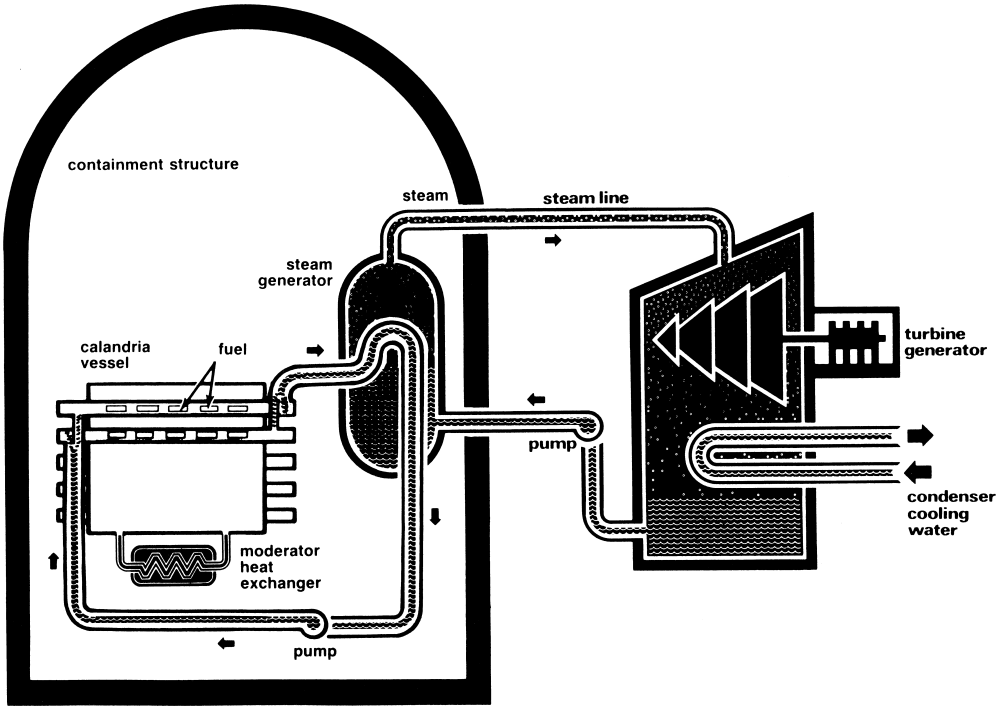

FIGURE 9 Steam cycle for CANDU pressurized heavy-water reactor.

with separate coolant and moderator, however, also has similarities to the CANDU (Fig. 9).

Cylindrical fuel assemblies (Fig. 15) each contain two stacked sub-assemblies of 18 zirconium-clad fuel pins of UO_2 enriched to 1.8 wt.% in ^{235}U. Water enters the coolant inlet, flows downward through a central tube, redistributes in the lower head, travels upward among the fuel pins, and exits as a steam–water mixture. The reactor core (Fig. 16) consists of nearly 1700 fuel assemblies distributed through a graphite cylinder of roughly 12-m diameter and 7-m height.

The PTGR fuel assemblies can be exchanged on-line to maintain the general reactivity balance. Control rods are moved for routine power adjustment and fully inserted for shutdown.

E. Breeder Reactors

The breeder-reactor design concept is predicated on maximizing new fuel production in breeding more fuel than used to sustain the neutron chain reaction. For this purpose, fissile plutonium and fertile ^{238}U fuel with fast neutrons have been found to be the most efficient.

The liquid-metal fast-breeder reactor (LMFBR) keeps neutron energy high by using liquid sodium as a coolant, and thereby specifically avoiding the presence of moderating material. The liquid sodium, although not the heaviest coolant available, is not too light, has favorable heat-transfer properties, and is not an excessively strong absorber of neutrons compared to other choices.

Although experimental fast-breeder reactors have been operated in the United States since the late 1950s, the most recent intense focus on LMFBR systems had been in Western Europe, the Russia, Japan, and India. With shutdown of the major western European systems located in France and Germany, (which were funded by consortia that also include Italy, Belgium, Netherlands, and the United Kingdom), the future of this reactor type is in doubt.

The steam cycle is a three-loop system (Fig. 17) with the first two of sodium and the third of water. The intermediate loop is present to isolate the primary from possible contact with water in the steam generator. The primary sodium becomes radioactive from neutron absorption and also can pick up fission-product radionuclides from the fuel. If this sodium were to come in contact with water, it would lead to an exothermic reaction that also would spread contamination.

Fuel for the LMFBR consists of mixed-oxide fuel pellets, which combine about 10–30 wt.% plutonium with natural or depleted (0.2–0.35 wt.% ^{235}U) uranium—the byproduct of the enrichment process. The slender pellets are loaded into thin stainless-steel cladding tubes, and hence into hexagonal array subassemblies [Fig. 18(a)]. Breeding is optimized by surrounding the mixed-oxide core with a blanket of depleted uranium. The axial blankets above and below the core are created by loading pellets

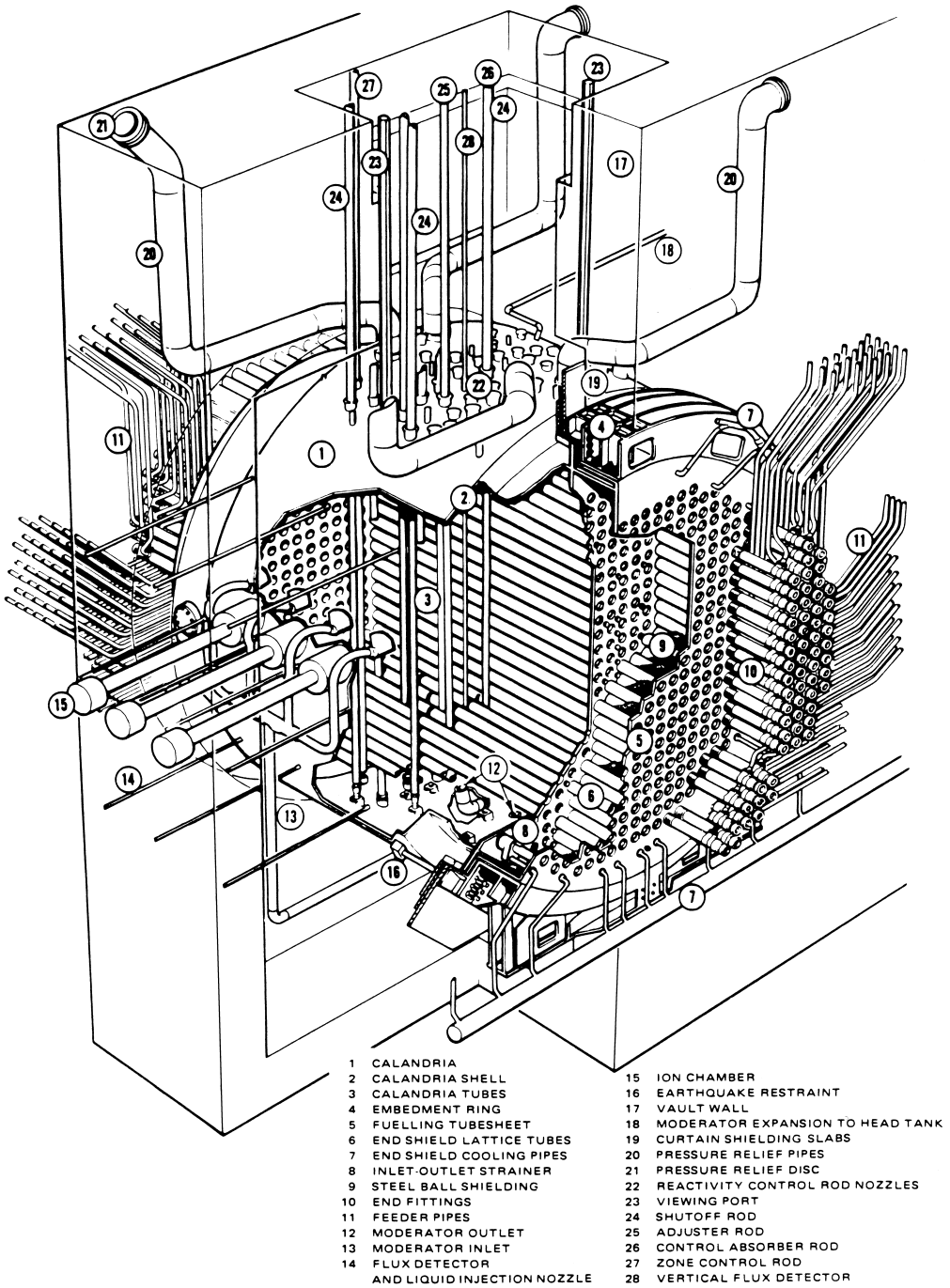

FIGURE 10 Calandria vessel and pressure tube of CANDU pressurized heavy-water reactor. [Courtesy of Atomic Energy of Canada Limited.]

of natural or depleted uranium at either end of the core fuel pins. The surrounding radial blanket consists of separate subassemblies [Fig. 18(b)] of natural or depleted uranium, where the pins may be of larger diameter because the power density in the blanket is much lower than it is in the core.

Reactivity control is accomplished through use of poison control rods. Since the breeder produces more fuel than it uses, however, the multiplication does not decrease with fissile burnup and fission product buildup as dramatically as in the converter reactors described previously. Shutdown, also using control rods, generally depends on

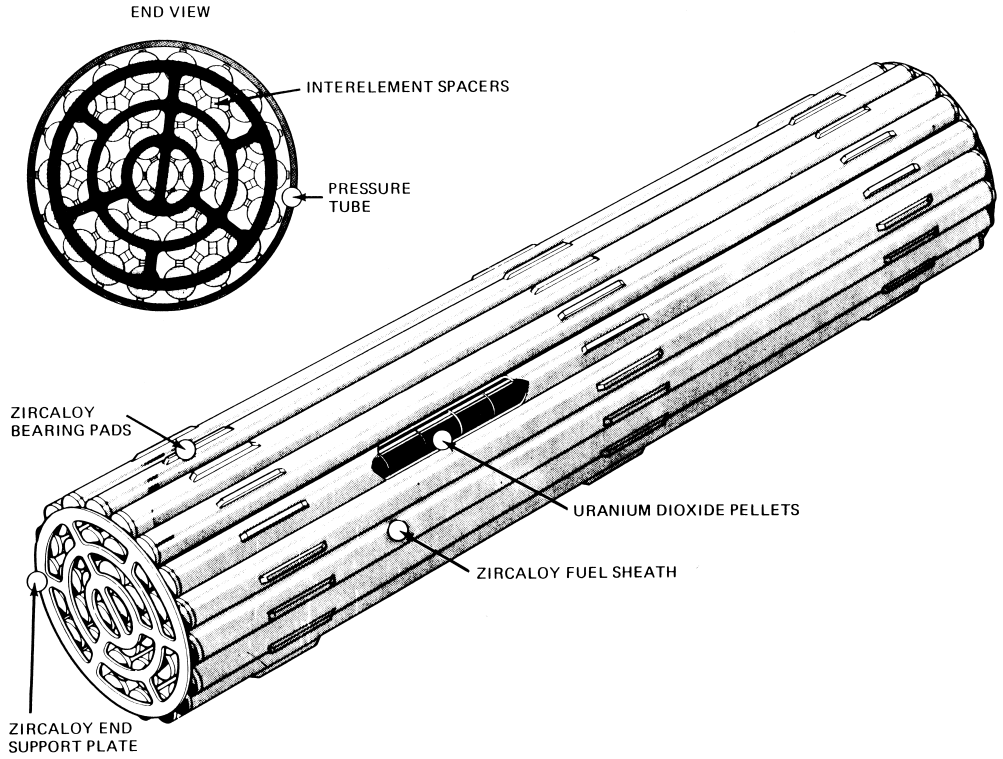

FIGURE 11 Fuel assembly for CANDU pressurized heavy-water reactor. [Courtesy of Atomic Energy of Canada Limited.]

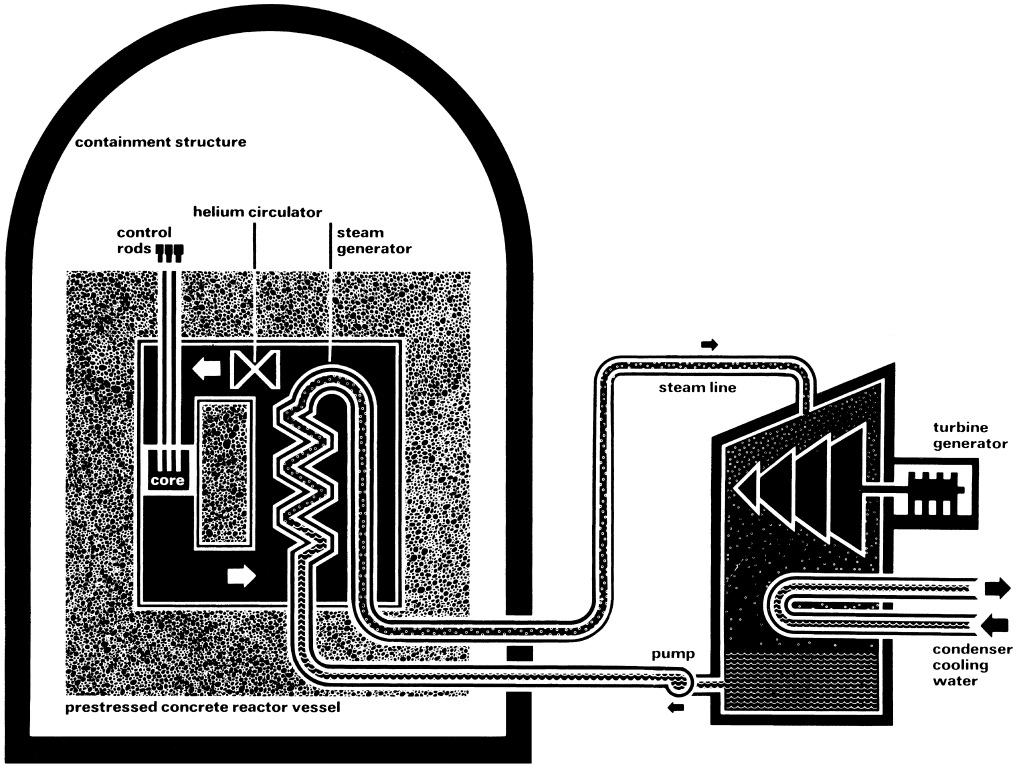

FIGURE 12 Steam cycle for high-temperature gas-cooled reactor (HTGR). [Courtesy of Atomic Industrial Forum.]

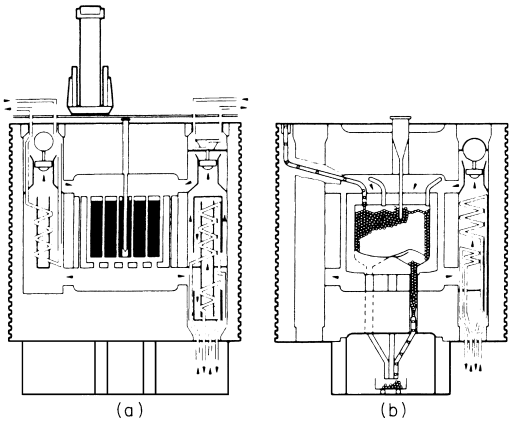

FIGURE 13 Prestressed concrete reactor vessels (PCRV) for (a) prismatic high-temperature gas-cooled reactor and (b) thorium high-temperature ("pebble-bed") reactor. [Courtesy of Oak Ridge National Laboratory.]

two redundant sets of rods. Each set operates on a different physical principle and either set, by itself, can shut down the chain reaction.

F. Other Reactor Concepts

Although the previous designs are the most popular, a wide variety of other possibilities have been built for power production or research purposes. Still others have been researched "on paper." The major approach is to look at viable combinations of fuel, coolant, and moderator. A few examples are identified below.

CANDU reactors could also be operated with fuel assemblies of enriched uranium, plutonium, ^{233}U/thorium, or a mixture thereof. Potential coolants other than heavy water include light water and organic liquid.

The gas-cooled fast breeder reactor (GCFBR) uses helium coolant and plutonium fuel in a concept similar to the HTGR, except with no graphite moderator. The molten-salt breeder reactor (MSBR) concept includes liquid fuel that circulates through a graphite-block core region in a closed primary loop. The fuel is processed online to remove fission products and ^{233}U bred from thorium in the salt.

Several other novel designs that stress enhanced safety have also been proposed. Three such concepts are introduced in the next section.

IV. SAFETY FEATURES

Each reactor design incorporates features to respond to anticipated system upsets and to unlikely, but not incredible, serious accidents. The major concerns are the potential release of radioactive fission and transuranic-element products to the environment.

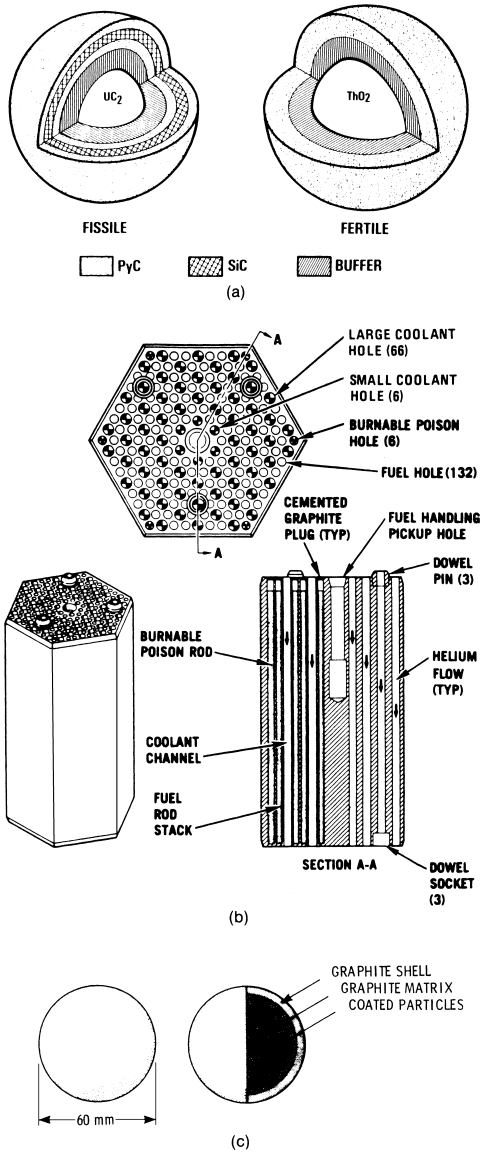

FIGURE 14 Fuel assembly components for high-temperature gas-cooled reactors: (a) microspheres, (b) prismatic fuel block [courtesy of GA Technologies], and (c) Fuel sphere ("pebble"). [Knief, R. A. (1992). "Nuclear Engineering: Theory and Technology of Commercial Nuclear Power," 2nd ed., Taylor & Francis/ Hemisphere, New York.]

A. Fundamentals

Since dispersal of radioactive products requires energy, reactor safety is equivalent to reducing and controlling the energy source. Energy stored in the system's coolant and fuel as a result of temperatures and pressures during routine power operation must be accomodated without

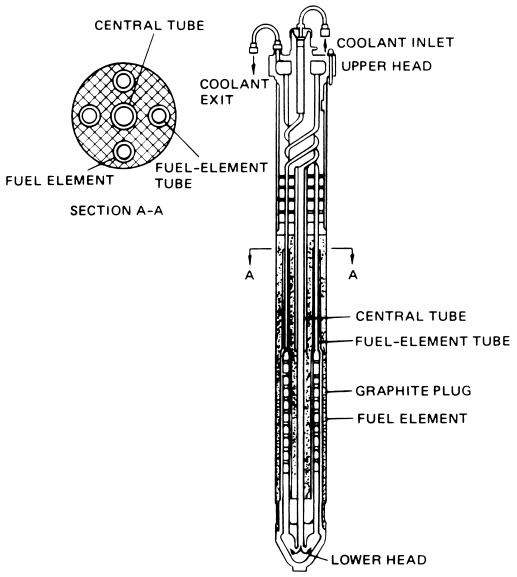

FIGURE 15 Fuel assembly for a Soviet RBMK pressure-tube graphite reactor (PTGR). [From, NUREG-1250 (1987).]

causing damage. The unique nuclear energy source, the fission chain reaction, must be terminated. Then, the decay-heat byproduct of fission product radioactive decay must be controlled to prevent overheating. If these first three energy sources are controlled, the next concern—chemical reactions, primarily between the coolant and cladding—will also be accommodated. External events, such as earthquake or tornado, have the potential for initiating an accident, and thus must be incorporated into the design basis.

Each reactor has design-basis accidents that determine acceptability in terms of potential radioactive product release. These are classified roughly in terms of:

1. Reactivity transients—neutron poison changes that lead to unplanned power increases.
2. Overcooling—excessive heat removal from steam withdrawal, perhaps through steam-generator overfeeding or a steamline break.
3. Loss of cooling—failure of core heat removal ability through loss of coolant flow, up to and including loss of the coolant inventory itself [called, respectively, loss of flow accident (LOFA) and loss of coolant accident (LOCA)].
4. Steam-generator tube rupture.
5. Spent-fuel drops or waste handling spills.
6. External events.

More severe accidents, sometimes referred to as beyond-design-basis accidents, where multiple safety systems fail to function, are sometimes considered to evaluate overall responses.

Safety systems, although often highly design-dependent (e.g., based on design and operational differences among use of water, gaseous, and liquid sodium coolants), have as their goal prevention of overheating, fuel melting, and the subsequent large-scale dispersal of fission products. Reliability is enhanced through redundancy in subsystem function and location.

B. Safety Systems

The basic safety systems may be classified according to function as:

1. reactor trip (RT)
2. emergency core cooling (ECC)
3. postaccident heat removal (PAHR)
4. postaccident radioactivity removal (PARR)
5. containment integrity (CI)

Their basic functions are summarized by Fig. 19 for light-water reactors. The same basic functions apply to all reactor systems, even if in somewhat different form.

1. Reactor Trip

Each of the reactor types described previously includes neutron poison control rods, which can be inserted rapidly into the fuel core to shut down the fission chain reaction. These rods may be supplemented by secondary means such as reserve shutdown spheres (HTGR); a redundant, independent set of rods (LMFBR); or injection of soluble boric acid poison (LWRs).

2. Emergency Core Cooling

Emergency core cooling for the light-water reactors is primarily based on injection of (borated) water into the coolant-starved core region following a LOCA event. Multiple trains of separate systems typically can inject water at high, intermediate, or low pressure to coincide with various needs during the time-history and/or magnitude of the event. Recirculation of coolant that collects in the reactor building sump provides a long-term coolant supply after the initial inventories have been exhausted.

The CANDU system also has injection capabilities, although grouping the pressure tubes (Fig. 10) into two separate flow circuits means that a given break will remove cooling capability from only half of the fuel. The large separate moderator volume in the calandria vessel provides additional sink for energy removal.

Emergency cooling in the HTGR design depends primarily on helium retention by the concrete vessel and the heat capacity of graphite. The LMFBR uses natural circulation of the low-pressure liquid sodium coolant, which

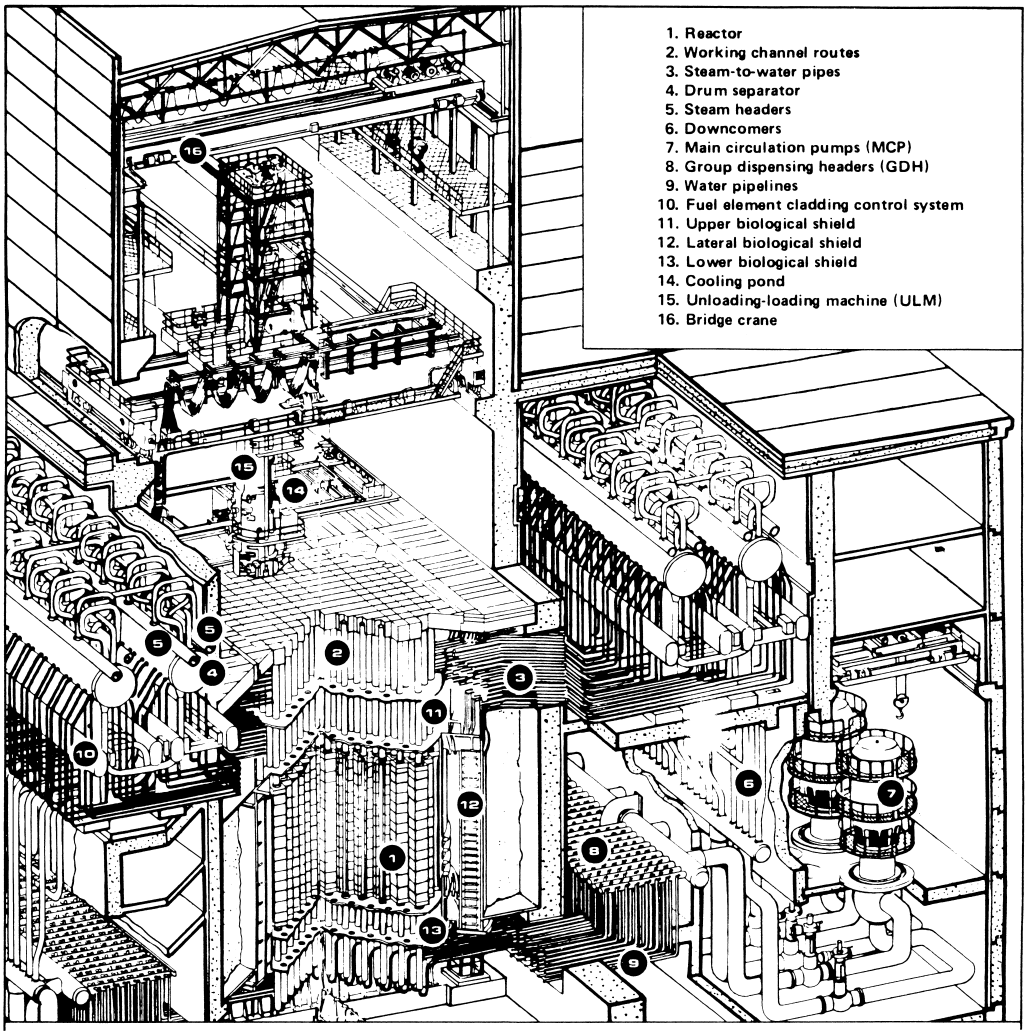

FIGURE 16 Sectional view of a Soviet pressure-tube graphite reactor (PTGR). [From *IAEA Bull.* **25**(2).]

due to its high boiling temperature would not automatically leave the primary system if a leak were to occur.

3. Postaccident Heat Removal

Removal of postaccident energy consists of two aspects—coolant temperature reduction, and containment-building pressure control. The first is accomplished through heat exchangers for ECC water recirculation in the water reactors. For the gas or liquid-sodium reactors, continued use of the steam generators can serve a similar function in the primary coolant loops.

Containment pressure control may be accomplished by using air coolers or, in water reactors, through water sprays to condense steam.

4. Postaccident Radioactivity Removal

Radioactive fission products, primarily chemically active iodine and aerosol/particulate constituents, may be removed by filtration. Noble gases can only be contained.

Water reactors have provision for containment sprays to remove radioactivity. Although the water sprays used for pressure reduction naturally remove some radioactive material, additives such as sodium hydroxide or thiosulfate increase removal, especially of elemental iodine.

5. Containment Integrity

The last line of defense against fission product release is the integrity of the containment structure or building. If the other systems have functioned as intended, pressure buildup should not threaten the containment.

A common denominator of containments is a leak-tight steel liner. In several of the designs, the liner is surrounded by thick reinforced concrete [including, for example, that for the pressurized water reactor in Fig. 20 and the structure of the HTGR's reactor vessel (Fig. 13)]. The lack of

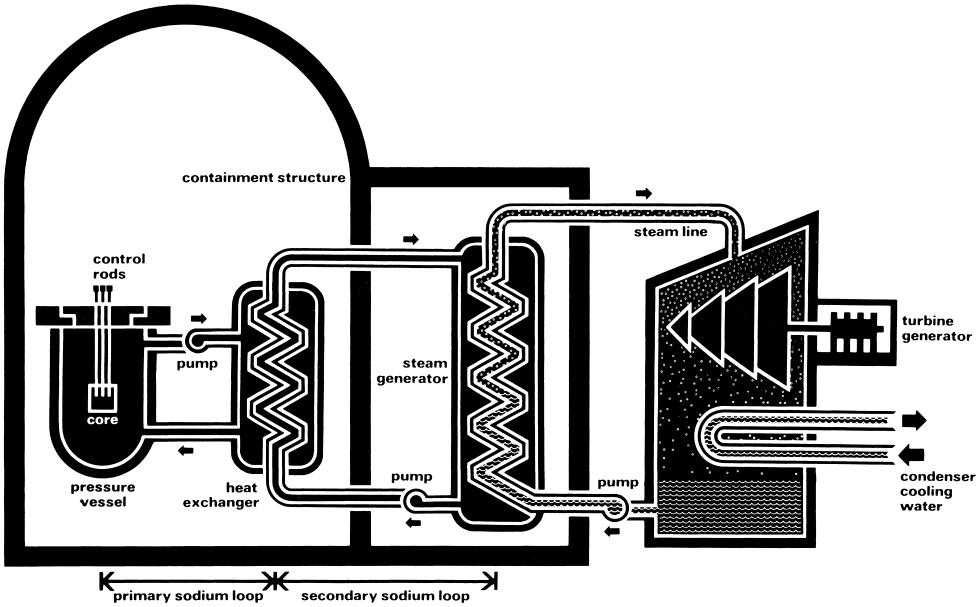

FIGURE 17 Steam cycle for liquid metal fast breeder reactor (LMFBR). [Courtesy of Atomic Industrial Forum.]

such a leak-tight containment structure at the Chernobyl PTGR was a major contributor to the serious consequences of the 1986 accident there.

The other major element of containment integrity is the ability to isolate penetrations using remotely operated valves or other means. These typically actuate on predetermined indication of excessive pressure, radiation level, or other related parameter.

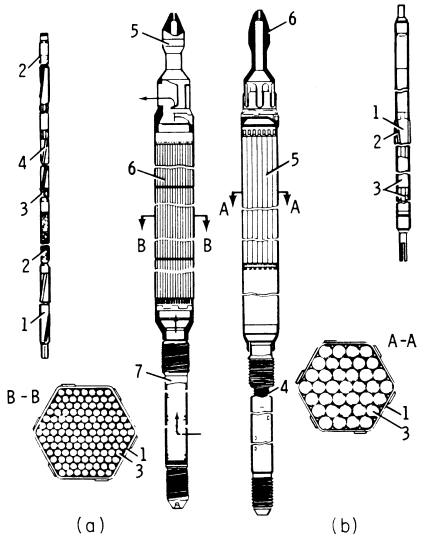

FIGURE 18 Fuel assembly for a typical liquid-metal fast-breeder reactor. [Courtesy *Nuclear Engineering International*.] (a) Fuel assembly: 1, pin cladding; 2, slugs of depleted uranium; 3, fuel pellets; 4, wire-wrapped pin; 5, fuel-assembly head; 6, fuel-pin assembly; 7, stem. (b) Radial blanket assembly: 1, pin cladding; 2, wire-wrapped fin; 3, depleted uranium; 4, blanket assembly stem; 5, blanket pin assembly; 6, blanket assembly head.

C. Advanced Reactors

Interest in reducing the risk of serious reactor accidents has led to consideration of several advanced reactor designs. Each of the concepts described next includes enhanced negative power feedback mechanisms (to cause inherent shutdown) and passive postaccident/postshutdown cooling mechanisms.

The Westinghouse AP600 PWR, featuring large water tanks above the core, is capable of providing emergency

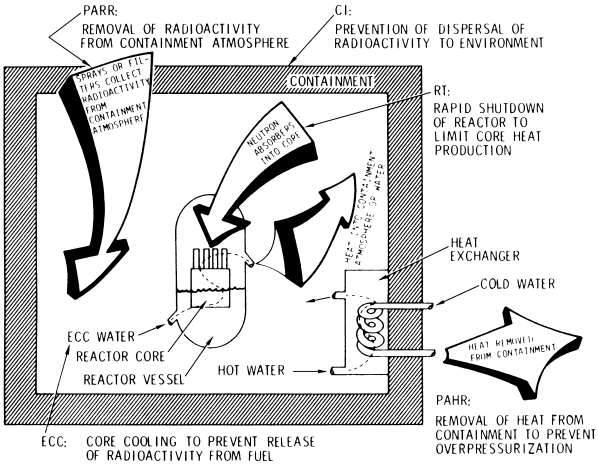

FIGURE 19 Functions of safety systems for light-water reactors. [Adapted from WASH-1400, courtesy of U.S. Nuclear Regulatory Commission.]

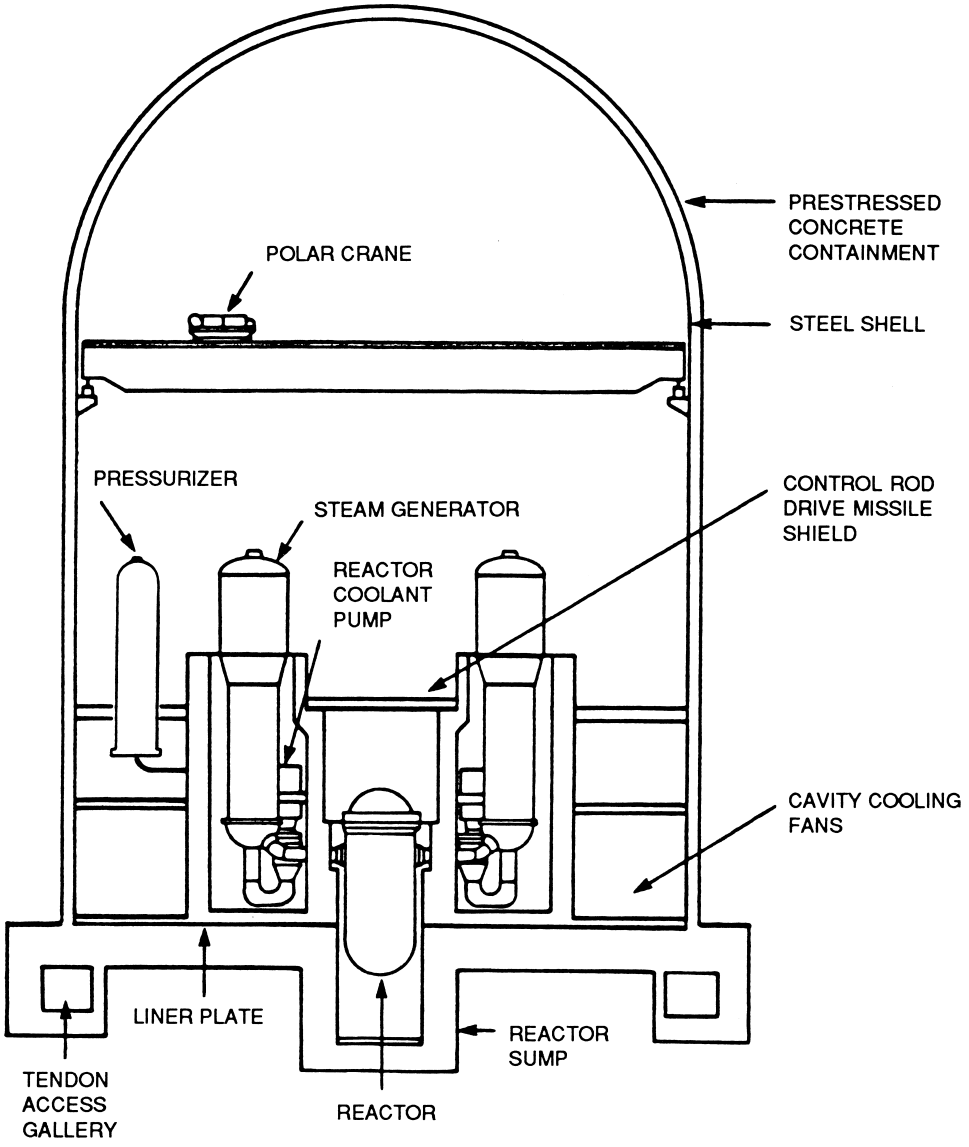

FIGURE 20 Containment structure for typical pressurized water reactor. [Courtesy of Westinghouse Electric Company.]

cooling water without pumps or electric power. Heat can be removed from the steel containment shell by a gravity-fed water spray and natural circulation of air.

The process-inherent ultimate safety (PIUS) reactor concept from Sweden's ASEA-Atom is essentially a PWR submerged in a large pool of borated water and surrounded by a massive concrete and steel containment structure. The hydraulic connection between the primary-loop and pool coolant volumes prevents intermixing during normal operation. Under accident conditions, however, the borated pool water enters the primary to assure both shutdown of the chain reaction and long-term cooling.

GA Technologies' modular high-temperature gas-cooled reactor [MHTGR] has a low-power-density graphite core that provides a large inherent heat sink and is very slow to overheat. The steel vessel and steam generator are enclosed in an underground silo cooled by natural air circulation and, if necessary, direct heat loss to the ground.

The power reactor inherently safe module [PRISM] is a small LMFBR being developed by General Electric. Fuel assemblies are made of a pyrometallurgical alloy used in the integrated fast reactor (IFR) concept. The IFR fuel has been tested at the Experimental Breeder Reactor 2 (EBR-2) in Idaho, where feedback alone shut down the core and natural circulation of the liquid-sodium coolant provided sufficient decay-heat removal. The PRISM system is placed in an underground concrete silo where

air can circulate freely to remove core decay heat, if necessary.

V. REGULATIONS

The inherent hazard associated with the radioactive material in reactor systems has led to the industry being the most regulated in the world. Through regulatory bodies such as the U.S. Nuclear Regulatory Commission (NRC), French Commissariat à l'Energie Atomique (CEA), Atomic Energy Control Board (AECB) of Canada, and the United Kingdom Nuclear Installations Inspectorate (NII), requirements for reactor design and operation are established and implementation is evaluated and monitored. Regulations with the force of law, licenses, or other methods are developed for reactor operation by such bodies, often with significant political and/or public input to the process.

One increasingly important element of the regulatory process is quality assurance (QA), focusing on methods and procedures to assure proper design, construction, and operation of safety-related components and subsystems. Another important feature is establishment of acceptable radiation exposures and identification of design-basis accidents whose analysis must show them to have consequences within the pre-established limits.

The accident at the Three Mile Island Unit-2 (TMI-2) PWR in 1979 has led to many changes in the regulatory process in the United States and elsewhere in the world. Some of these changes relate to the design, quality assurance, and inspection of modifications to plant safety systems; development and use of preapproved procedures for operation, maintenance, and other activities; administration, including staffing, training, and documentation; emergency planning; technical support, including accident and root-cause analysis; and support services such as radiological controls, chemistry, and maintenance.

The extremely serious 1986 accident at the Chernobyl Unit 4 occurred in a system not used elsewhere in the world. However, it did serve to reinforce many of the design, operations, and management lessons from the earlier TMI-2 accident. It also provided unprecedented insights into severe-accident behavior and served as a catalyst for significantly enhanced international cooperation and collaboration in research initiatives and nuclear-power-plant operation and management.

SEE ALSO THE FOLLOWING ARTICLES

ENERGY RESOURCES AND RESERVES • FISSION REACTOR PHYSICS • NUCLEAR ENERGY, RISK ANALYSIS • NUCLEAR FUEL CYCLES • NUCLEAR FUSION POWER • NUCLEAR REACTOR MATERIALS AND FUELS • NUCLEAR REACTOR THEORY • NUCLEAR SAFEGUARDS • RADIOACTIVE WASTES • THERMIONIC ENERGY CONVERSION • URANIUM

BIBLIOGRAPHY

Agnew, H. M. (1981). "Gas-cooled nuclear power reactors," *Sci. Am.* **244,** 55–63.

Catron, J. (1989). "New interest in passive reactor designs," *EPRI Journal* **14**(3), 4–13.

Douglas, J. (1994). "Reopening the nuclear option," *EPRI J.* **19,** 6–17.

Fishetti, M. A. (1987). "Inherently safe reactors: They'd work if we'd let them," *IEEE Spectrum* **24**(4), 28–33.

Framatome (1992). P4: The 1300 MWe PWR Series, Paris, France, April.

Glasstone, S., and Sesonske, A. (1994). "Nuclear Reactor Engineering (Volume 1: Reactor Design Basics & Volume 2: Reactor Systems Engineering)," 4th ed., Chapman & Hall, New York.

Golay, M. W., and Todreas, N. E. (1990). "Advanced light water reactors," *Sci. Am.* **262,** 82–89.

Knief, R. A. (1992). "Nuclear Engineering: Theory and Technology of Commercial Nuclear Power," 2nd ed., Taylor & Francis/Hemisphere, New York.

Lewis, H. W. (1980). "The safety of fission reactors," *Sci. Am.* **242,** 53–65.

Lish, K. C. (1972). "Nuclear Power Plant Systems and Equipment," Industrial Press, New York.

Marshall, W. (ed.) (1983). "Nuclear Power Technology," Volumes 1, 2, and 3. Clarendon Press, Oxford, England.

McIntyre, M. C. (1975). "Natural uranium heavy-water reactors," *Sci. Am.* **233,** 17–27.

Murray, R. L. (1993). "Nuclear Energy," 4th ed., Pergamon Press, Elmsford, NY.

Nero, A. V., Jr. (1979). "A Guidebook to Nuclear Reactors," University of California Press, Berkeley, CA.

Nuclear Engineering International (published monthly in the United Kingdom; includes annual "World Nuclear Handbook").

Nuclear Engineering International Special Publications (1989). French PWR Technology.

(1992). "Special section: The new reactors," *Nuclear News* **35,** 65–90.

Rahn, F. J., *et al.* (1984). "A Guide to Nuclear Power Technology," Wiley-Interscience, New York.

Reactor Safety Study: An Assessment of Risks in U.S. Commercial Nuclear Power Plants. (1975). U.S. Nuclear Regulatory Commission, WASH-1400 (NUREG-74/014), Washington, DC.

Sesonske, A. (1973). "Nuclear Power Plant Design Analysis," U.S. Atomic Energy Commission, TID-26241, Washington, DC.

Severe Accident Risks: An Assessment for Five U.S. Nuclear Plants (1989). U.S. Nuclear Regulatory Commission, NUREG-1150, Washington, DC.

Todreas, N. E., and Kazimi, M. S. (1990). "Nuclear Systems (Vol. 1: Thermal Hydraulic Fundamentals and Vol. 2: Elements of Thermal Hydraulic Design)," Taylor & Francis/Hemisphere, New York.

U.S. Department of Energy (1987). Overall Plant design descriptions VVER Water-Cooled, Water-Moderated Energy Reactor, DOE/NE-0084, Rev. 1, October.

U.S. Nuclear Regulatory Commission (1987). Report on the Accident at the Chernobyl Nuclear Power Station, NUREG-1250, Rev. 1.

Vendryes, G. A. (1977). "Superphenix: A full-scale breeder reactor," *Sci. Am.* **236,** 26–35.



Nuclear Radiation Detection Devices

Glenn F. Knoll
University of Michigan

I. Radiation Properties and Interactions
II. General Detector Properties
III. Gas-Filled Detectors
IV. Semiconductor Detectors
V. Scintillation Detectors

GLOSSARY

Avalanche Shower of additional ion pairs triggered by a single free electron in the high field region of proportional counters or Geiger–Mueller tubes.
Current mode Mode of detector operation in which the average current output is recorded.
Detector efficiency Fraction of radiation quanta incident on a detector that are converted into a recorded pulse.
Electron–hole pair Result of elevating a valence electron across the band gap of a semiconductor to the conduction band, leaving behind a hole in the valence band.
Energy resolution Ability of a detector to separate the contributions of discrete radiation sources of different energies.
Gas multiplication Process in which a single free electron in a gas can form a large avalanche of additional free electrons in a high electric field region.
Geiger–Mueller counter Gas-filled detector in which gas multiplication is used to produce large amplitude pulses of uniform amplitude.
Ion chamber Gas-filled radiation detector based on simple collection of ion pairs.
Ion pair Free electron and positively charged ion created from the interaction of radiation with a neutral gas molecule.
Photodiode Semiconductor device in which incident light is converted to electron–hole pairs.
Photomultiplier tube Vacuum tube in which incident light is converted to photoelectrons that are subsequently multiplied to form a measurable signal.
Proportional counter Gas-filled detector in which the amplitude of the signal is enhanced through the process of gas multiplication but remains proportional to the deposited energy.
Pulse mode Mode of detector operation in which each individual radiation quantum that interacts in the detector gives rise to a separate output pulse.
Radiation spectroscopy Process of measuring the energy distribution of a source of radiation by interpreting the pulse height spectrum recorded from a detector.

Scintillator Optically transparent medium in which the deposition of energy from a quantum of radiation creates a flash of visible light.

Semiconductor detector Detector, usually made of silicon or germanium, in which the collection of electron–hole pairs created by incident radiation forms the output signal.

ALL DEVICES currently used for the detection and measurement of ionizing radiation are based on the results of the interaction of radiation quanta within the detector active volume. In most applications, detectors are operated in *pulse mode* in which each particle or photon produces a separate signal pulse with an amplitude that reflects the deposited energy. The three major categories of detectors include gas-filled devices, semiconductor detectors, and scintillators. Each type will display different properties of energy resolution, detection efficiency, and event timing depending on their design and application.

I. RADIATION PROPERTIES AND INTERACTIONS

Radiations emitted in radioactive decay or nuclear reactions fall into the four major categories shown in Table I. The radiations listed in the left-hand column carry a net electrical charge. Because of the coulomb force that exists between this charge and that of the electrons of matter through which the radiation may travel, charged particles lose their energy continuously when passing through an absorber or detection device. These radiations are therefore characterized by a fixed *range* or distance of maximum penetration. In contrast, the radiations listed in the righthand column carry no electrical charge. Therefore, they may travel large distances, perhaps completely through a detector, without undergoing any type of interaction. When interactions do occur, it is likely that the energy and direction of these quanta are dramatically changed in a single step. In the process, part or all of their energy may be transferred to a single energetic electron or charged particle formed in this catastrophic interaction.

Only the radiations in the left-hand column can be detected directly. The coulomb interactions with absorber atoms transfer energy to large numbers of the absorber atoms that lie along the track of the particle. For example, in a gas, a trail of hundreds or thousands of ion pairs will be created along the track of the particle as it passes through the gas. Each ion pair corresponds to an original absorber atom to which enough energy has been transferred to remove an electron from one of the outer electron shells. Each ion pair therefore consists of a free electron and a positive ion, corresponding to an original atom missing one electron. We will see that the movement and collection of these ion pairs form the basis of operation for gas-filled detectors. A similar collection of charge carriers forms the basic signal observed from all detector types.

TABLE I Categories of Ionizing Radiation

Charged radiations	Uncharged radiations
Fast electrons	X-rays or gamma rays
Heavy charged particles	Neutrons

For the uncharged radiations in the right-hand column of Table I, a two-step process must take place. Through a major interaction, energetic electrons or charged particles are produced that can then be detected using conventional methods. For gamma rays (or X-rays), the principal interaction processes are photoelectric absorption, Compton scattering, and pair production. Each of these processes converts part or all of the gamma-ray photon energy into kinetic energy of secondary fast electrons produced in the process. Detection of gamma rays, therefore, translates into detecting these secondary electrons.

For neutrons, the important interaction processes lead not to fast electrons but to energetic, heavy charged particles. Slow neutrons can produce energetic alpha particles through reactions with ^{6}Li or ^{10}B, and many detectors for low-energy neutrons incorporate lithium or boron into conventional devices that respond to the secondary alphas. Fast neutrons (with energy above about 100 keV) are more commonly detected through the elastic scattering of the neutron from a hydrogen nucleus. Part of the neutron energy is transferred into kinetic energy of the recoiling nucleus (a *recoil proton*). Conventional detectors, such as scintillators or proportional counters that contain hydrogen as a major component, are therefore widely applied as fast neutron detectors.

II. GENERAL DETECTOR PROPERTIES

A. Simplified Detector Model

In order to understand the general response of radiation detectors, we will imagine that a single fast electron or charged particle begins to pass through a detector at time zero. This particle may either be incident directly on the detector as an alpha particle or beta particle from a radioactive source, or it may be generated internally within the detector as a result of a neutron or gamma-ray interaction. In solid detectors, heavy charged particles will deposit all their energy over a range of tens to hundreds

of micrometers, while fast electrons can travel a few millimeters before being stopped. The time required for the particle to be stopped is a few picoseconds in solid detectors. Stopping times will be longer in gas detectors because of the longer range of the particle, and may be of the order of nanoseconds. In either case, these times are sufficiently short so that they can be considered to be instantaneous in most practical applications. Therefore, the first step in the detection process is the sudden deposition of energy along the track of the charged particle. The energy that is deposited results, either directly or indirectly, in the creation of electric charge. This charge represents the free electrons and positive ions formed along the track in gases or the electrons and holes formed in a semiconductor material. (In scintillators, the charge is formed indirectly by converting the light into electrons in a photomultiplier tube.) If an electric field is present within the detector, these charges will move and ultimately be collected. The motion of this charge constitutes an electric current that is the fundamental signal on which radiation detectors are based.

This current will continue to flow for a short period of time following the creation of the charge. It stops once the charge carriers (ion pairs or electron–hole pairs) are collected at the electrodes. This time varies widely among different detector types, but often lies in the range between about 10 nsec and 10 μsec. If a detector is continuously irradiated by energetic particles, then a series of current pulses will be produced within the device as sketched in Fig. 1. We can now introduce two distinct modes of detector operation. In *current mode*, an ammeter with slow response characteristics is simply connected across the output of the detector. The ammeter will then measure a current that is the time average of all the individual current pulses that occur over the time constant of the meter. In this current mode of operation, the measured current is therefore proportional to the product of the average charge created per particle multiplied by the rate at which particles are detected. Current mode devices are commonly used in many applications, including radiation survey meters used for personnel protection or in monitoring devices used in intense radiation fields.

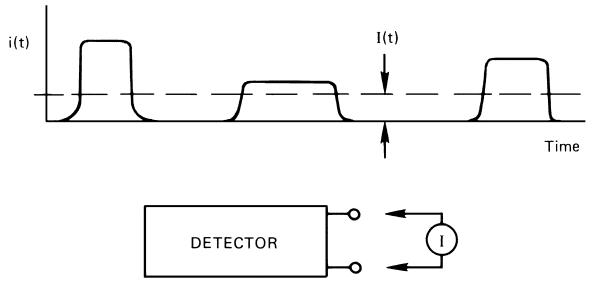

FIGURE 1 An illustration of current mode operation of a detector. The ammeter responds to the current $I(t)$ averaged over many individual pulses.

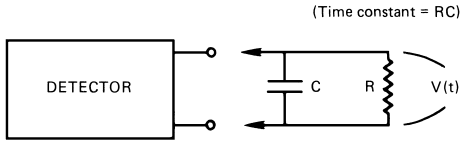

FIGURE 2 An illustration of pulse mode operation. Each quantum of radiation gives rise to a separate voltage pulse $V(t)$.

A second mode of operation, called *pulse mode*, is more common when detailed information on individual particles or quanta of radiation is needed. Here, a measuring circuit, such as the input stage of a preamplifier, is connected to the detector terminals as shown in Fig. 2. The time constant of this measuring circuit is normally chosen to be long compared with the charge collection time in the detector but short compared with the average time between individual particle interactions. Under these circumstances, individual pulses are measured for each individual particle. A typical pulse generated under these conditions is sketched in Fig. 3. The pulse rises during the time that current is flowing in the detector. It reaches a maximum amplitude given by

$$V_{\max} = Q/C, \tag{1}$$

where Q is the total charge generated within the detector during that pulse and C is the capacitance of the measuring circuit. The pulse then returns to zero with an exponential decay determined by the time constant of the measuring circuit.

Several features of this typical output pulse should be noted. Of most importance is the fact that the amplitude of the pulse is directly proportional to the total charge Q created within the detector by the charged particle. In many types of detectors, this charge is proportional to the

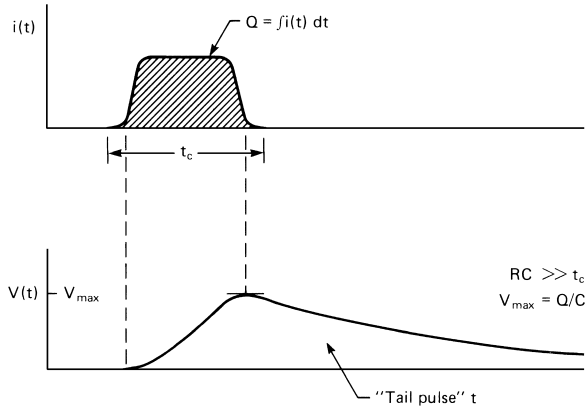

FIGURE 3 A voltage "tail pulse" is produced by collecting the current from a single pulse across a measuring circuit with long time constant.

amount of kinetic energy deposited by the particle within the active volume of the detector. If the particle is fully stopped, then a measurement of the pulse amplitude is equivalent to a measurement of the initial energy of the particle. Thus, *energy spectroscopy* can be carried out by analyzing the amplitude distributions of the pulses produced from detectors. These amplitude distributions, usually called *pulse height spectra*, serve as the most common means of displaying the energy information obtained from detector systems.

In addition to its energy, the time of arrival of the particle may also be of interest in many radiation applications. This timing information is derived from the initial rising portion of the pulse sketched in Fig. 3. The most precise timing is obtained when the rise time of the pulse is as short as possible, corresponding to detectors in which the charge is collected most rapidly. Gas-filled detectors tend to be limited to charge collection times of a microsecond or longer, whereas some types of scintillation and semiconductor detectors are characterized by corresponding times in the nanosecond range. These fast detectors are of value not only in timing measurements but also minimize the pulse to pulse interference or *pileup* that may occur at high rates because of the random spacing between typical radiation interactions.

In many straightforward applications of radiation detectors in pulse mode, detailed information on the energy or time of arrival of each particle or photon is not of interest. Instead, a simple measurement of their relative intensity is all that is required. Then, the supporting electronics include a means to select only pulses above a given level (an *integral discriminator*) or that fall within a given range (a *differential discriminator*) to preferentially accept events of interest that may be present together with low-amplitude electronic noise or background radiation. This mode of operation uses the detector as a simple counter, and a measurement of the counting rate is taken as an indicator of radiation intensity. In more demanding applications in which multiple types or energies of radiations may be of interest, each pulse from the detector is sorted according to its amplitude into a histogram known as a multichannel spectrum. If the individual channels are narrow, then this multichannel spectrum (or pulse height spectrum) takes on the characteristics of the theoretical differential distribution that describes the amplitude distribution of the pulses. An example of such a differential distribution is shown in Fig. 4 for a simple case in which all pulses are clustered in amplitude around a central value (shown as H_0 on the figure). In a differential spectrum, the area under the curve between two arbitrary limits gives the number of events that were measured with an amplitude that lies between those limits. The general field of radiation spectroscopy is based on recording more

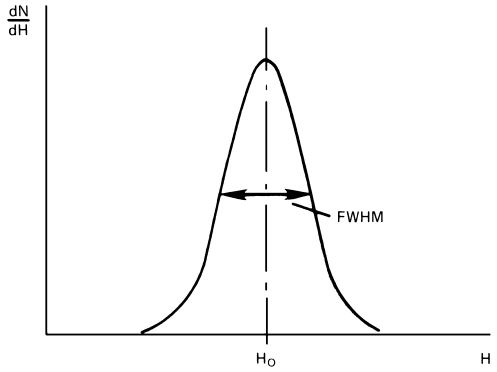

FIGURE 4 A peak in the pulse height spectrum produced by the response of a detector to monoenergetic radiation.

complex pulse height spectra than are generally observed from detectors. Software analysis routines are then implemented to sense and quantify peaks and other features in these spectra to yield information on the energies and intensities of the incident radiations.

Passive devices represent another mode of detector operation in which information is extracted from the device after a previous exposure to the radiation. These devices cannot supply information on the time of arrival of individual quanta of radiation, but they can be useful in "after-the-fact" measurements. Passive means of detecting the passage of charged particles through detectors include (1) damage in dielectric materials that can be revealed as a surface pit upon later etching, (2) creation of activated silver halide grains in a photographic emulsion that can be revealed through the photographic development process, or (3) the creation of long-lived trapped electrons and holes in some crystalline materials (known as *thermoluminescent dosimeters*) that can be sensed through the light that is emitted when the traps are depopulated by later heating the material.

B. Energy Resolution

If a detector is operated in pulse mode and irradiated by monoenergetic radiation, a single peak should ideally be produced in the differential pulse height spectrum as shown in Fig. 4. Because of a number of factors, this peak has some finite width even though the incident radiation may be perfectly monoenergetic. Some contributors to this width would include electronic noise introduced by the pulse processing components, fluctuations in the amount of charge actually collsected because of losses within the detector, and statistical fluctuations in the number of charge carriers initially produced. This latter effect of charge carrier statistics represents an irreducible minimum width to the peak that must remain even if all other sources of noise and fluctuation were reduced to zero.

The energy resolution of the measurement system is formally defined as

$$R = \text{FWHM}/H_0, \tag{2}$$

where FWHM represents the full width at half maximum of the peak and H_0 represents its centroid position. Scintillation detectors are characterized by energy resolution figures of 5% to 10% or greater, while semiconductor detectors can show energy resolution figures as low as 0.1%. Detectors with good energy resolution (small values of R) are favored in applications in which many different or closely lying energies of the incident radiation must be separately identified.

Because the statistical fluctuation in the number of charge carriers produced is a limiting factor in energy resolution, there is a premium on choosing detectors in which large numbers of carriers are produced per pulse. Based on considerations of Poisson statistics, the relative fluctuation in numbers of carriers produced should decrease as $1/\sqrt{N}$ where N is the number of charge carriers. The best energy resolution is therefore possible in detectors for which a minimum amount of energy is needed to create one carrier, and therefore N is maximized. Thus, the excellent energy resolution observed from semiconductor detectors derives from the fact that only about 3 eV of energy are required to create 1 electron–hole pair. The corresponding energy that must be deposited in a scintillator to create 1 photoelectron in a photomultiplier tube coupled to the crystal is 100 eV or greater. The limiting energy resolution in scintillators is therefore very much poorer.

C. Detection Efficiency

In Fig. 4, the total area under the peak is equal to the number of pulses that contributed to the spectrum over the measurement period. If every incident particle gave rise to a pulse, then this area is also equal to the number of incident particles. Under these conditions, the detector is said to display 100% intrinstic detection efficiency.

In practical applications, many types of detectors can have close to 100% intrinsic detection efficiency for charged particles or fast electrons (the radiations on the left in Table I). In some interactions, the particle may deposit less than its full energy, and events to the left of the peak in Fig. 4 will also be recorded. In such cases, a distinction is sometimes made between peak efficiency, which restricts the counted event to those that contribute to the full energy peak, and total efficiency, in which all pulses are counted regardless of their amplitude. Processes that can shift recorded events out of the peak include energy loss by the particle in dead layers or entrance windows in front of the active volume of the detector or escape of the particle from the detector active volume before it has lost all its energy. Particularly for fast electrons, the latter effect can produce a substantial continuum to the left of the peak in the pulse height spectrum. Nonetheless, the total efficiency (including both the peak and continuum area) remains close to 100% for typical cases. For weakly penetrating particles, attenuation in the detector entrance window can reduce the total efficiency below 100%.

The situation is very different for the uncharged radiations shown on the right in Table I. A substantial fraction of all quanta incident on the detector may simply pass through without interaction. For example, the mean free path between interactions for high-energy gamma rays can easily be 10 cm or more in typical detector materials. Therefore, a substantial fraction of all such gamma rays will escape detection when incident on a detector of several centimeters thickness. The same general statements are also valid for neutrons, and therefore the detection efficiency of neutron detectors may be closer to 1% or 10% than to 100%.

D. Gamma-Ray Spectra

The response of detectors to monoenergetic gamma rays is complicated by the fact that many gamma-ray interactions convert only part of the gamma-ray energy to directly detectable fast electrons. A simplified pulse height spectrum that might be observed from a detector for incident 3 MeV gamma rays is sketched in Fig. 5. Here, we see a full energy peak at the right, corresponding to those gamma rays that enter the detector and convert all their energy to fast electrons. This conversion can take place in a single photoelectric absorption step, where the gamma ray disappears and its energy is completely transferred to an electron from the absorbing media. For most gamma ray energies and absorber materials, however, it is more likely that the initial interaction of the gamma ray is a Compton scattering. Here, only a portion of the gamma-ray energy is transferred to an absorber electron,

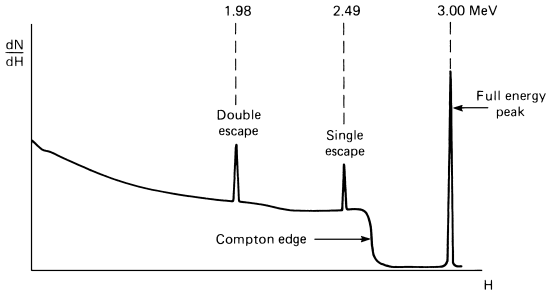

FIGURE 5 A typical pulse height spectrum expected from a germanium detector irradiated by 3 MeV photons.

and a scattered gamma ray with reduced energy continues after the interaction. In many cases, the scattered gamma escapes without further interaction, leaving behind only the Compton electron to deposit energy in the detector. The energy that can be transferred in a single scattering event ranges from a minimum of 0 to a maximum given by

$$E_{e-}]_{max} = h\nu\left(\frac{2h\nu/m_0c^2}{1+2h\nu/m_0c^2}\right), \quad (3)$$

where $h\nu$ is the energy of the incoming gamma ray and m_0c^2 is the rest mass of an electron (.511 MeV). This maximum energy is labeled as the "Compton edge" in Fig. 5. The "Compton continuum" corresponds to the range of all possible energy losses between these two extremes.

If the gamma ray interacts more than once in the detector, so little time elapses between interactions that the events are essentially simultaneous. The detector output then corresponds to the summed response of the individual events. It is possible, for example, for a gamma ray to Compton scatter initially, and then for the scattered gamma ray to be fully absorbed through photoelectric absorption. In this case, the corresponding detector pulse has an amplitude that again falls in the full energy peak because the *total* electron energy is no different than the energy produced in a single photoelectric absorption. It is generally desirable to have as large a fraction as possible of all events to fall under the full energy peak to maximize the intrinsic peak detection efficiency and to minimize the continuum that could obscure weak peaks at lower energies. Therefore, there is a preference for using gamma-ray detectors with large dimensions so that multiple interactions of the type just described result in more pulses that contribute to the full energy peak.

Two other peaks are evident in Fig. 4 corresponding to energies of 0.511 and 1.02 MeV below the full energy peak. These correspond to gamma rays that enter the detector and undergo the process of *pair production*. Here, the gamma ray disappears and is replaced by an electron–positron pair. The creation of these particles requires an energy equal to 1.02 MeV. The energy of the gamma ray above this threshold appears as kinetic energy shared by the electron and positron. This kinetic energy is recovered in the detector in the conventional manner. At the end of its track, the positron will annihilate with a negative electron of the absorber producing two annihilation photons with energy of 0.511 MeV each. If both of these photons escape from the detector without further interaction, the corresponding pulse from the detector falls within the peak labeled "double escape" in Fig. 5. If only one of these photons escape and the other is fully absorbed within the detector by subsequent photoelectric absorption, then an event is produced that falls under the "single escape peak" in Fig. 5. If both annihilation photons are reabsorbed, a pulse is produced that again falls within the full energy peak.

III. GAS-FILLED DETECTORS

Devices in which the detection medium is a gas or mixture of gases are one of the three major categories of radiation detectors. Because the range of typical fast electrons is several meters or more in gases near atmospheric pressure, they are seldom fully stopped within the dimensions of gas detectors of practical size. Therefore, gas-filled detectors are not capable of measuring the full energy of typical fast electrons. For the same reason, they are not useful for the spectroscopy of gamma rays because secondary electrons of similar ranges are produced in gamma-ray interaction. Nonetheless, gas-filled devices can produce detectable pulses from the partial energy deposition of fast electrons as they pass through the active volume, and are therefore still useful as basic counters if no energy information is needed. In contrast, the range of heavy charged particles is typically a few centimeters or less in atmospheric pressure gases. Therefore, gas-filled devices can easily be applied to measure the energy of charged particles, such as alpha radiation, or the secondary charged particles produced by neutrons.

A. Ion Chambers

An ion chamber is a device in which two electrodes have been placed within an enclosed volume of gas to create an electric field. Ion pairs that are formed along the track of an energetic particle are caused to drift under the influence of this field. In its simplest form, the ion chamber is operated in current mode by measuring the average current corresponding to the drifting ions and electrons within the active volume of the chamber. If the electric field is sufficiently high to prevent loss of charge because of the recombination of the positive ions and electrons, a condition of *ion saturation* is reached. Then, the measured current is simply proportional to the rate of formation of charge within the ion chamber and is proportional to the intensity of the incident radiation. Ion chambers used in current mode are widely applied in radiation dosimetry and in the monitoring of high fluxes of radiation as encountered, for example, in nuclear reactor instrumentation systems.

Ion chambers can also be operated in pulse mode, but usually only for energetic, heavy charged particles. The amount of energy deposited by fast electrons over realistic dimensions in a gas is so small that the corresponding pulse amplitude is generally too small to be of use.

In a gas, approximately 35 eV of particle energy are expended per ion pair formed. The number of charge carriers that are produced per unit energy loss is therefore intermediate between that of semiconductor detectors and scintillation detectors. The corresponding energy resolution of pulse-type ion chambers therefore also lies between that of semiconductor detectors and scintillators, with values ranging from a few tenths to several percent.

Even for heavy charged particles, the pulse amplitude observed from ion chambers is very small. If we assume a deposited energy of 1 MeV, then about 30,000 ion pairs are formed in typical gases. Each ion pair carries one electronic charge, so Eq. (1) predicts an amplitude of about 50 μV across a collection capacitance of 100 pF. This amplitude is so small that great care must be taken to minimize electronic noise introduced in the preamplifier if the energy resolution is to be preserved. To help alleviate this problem, many gas-filled detectors are instead operated as proportional counters, as described next.

B. Proportional Counters

The size of the pulse produced in a gas-filled counter can be greatly increased through the use of a process known as *gas multiplication*, which will occur at high values of the electric field. The free electron member of the original ion pair can be accelerated to a high velocity between collisions with gas molecules if the electric field is also a high value. If the electron gains enough velocity, its energy may exceed that of the ionization energy of the molecule with which it next collides. In that case, the gas molecule may be ionized producing a second free electron. Thus, two free electrons now exist in place of one before the collision. Now, both electrons can be further accelerated and undergo more collisions in which additional free electrons are created. The number of electrons therefore grows with distance in an exponential fashion, and the process terminates only when all electrons reach the collecting electrode. This process is triggered by a single free electron and is called a *Townsend avalanche*. Only *free* electrons are sufficiently mobile in an electric field to create this secondary ionization. Positive ions have a much larger size and mass and cannot gain enough energy between collisions to cause further ionization at any practical value of the electric field. Their mobility is so low that they remain almost motionless during the microsecond or so it takes the full Townsend avalanche to develop. For the same reason, it is important that the free electron not become attached to a neutral gas atom to form a negative ion. Gases with high electron attachment coefficients must therefore be avoided in gas detectors that make use of avalanche formation. Because oxygen readily attaches electrons, air must be excluded from the counter gas. This can be done by sealing the detector after filling with an appropriate nonattaching gas or by flushing out the air by continuously flowing the fill gas during operation of the detector. The noble gases, such as argon or krypton, are common choices, often with an added hydrocarbon gas component to absorb ultraviolet photons formed by excited atoms produced in the avalanche formation.

If conditions are maintained in which each original electron produces an avalanche of equal size, then the total charge that is generated within the detector remains proportional to the number of original ion pairs produced by the incident particle. This is the region of operation of a *proportional counter*. Because between 10^2 and 10^4 additional electrons are created in a typical avalanche, the pulse size is larger than that observed in an ion chamber by the same factor. Typical pulses from proportional counters are therefore in the millivolts rather than microvolts range. This gain allows a much more convenient operation and minimizes the deleterious effects of electronic noise in measurement of the pulse amplitude.

Proportional counters are normally operated with electrodes in the form of a fine anode wire and a cathode consisting of a coaxial outer wall of several centimeters diameter. A cross-sectional view is shown in Fig. 6. The use of the fine anode wire is important for two reasons. Because the electric field strength in cylindrical geometry varies inversely with radius, a very large values of field strength can be produced at modest applied voltages if the radius value is small. Very small diameter anode wires therefore create extremely high electric field strength near the surface of the wire. Also, the field strength then drops off rapidly with distance from the wire surface. Because the Townsend avalanche requires a minimum value of the electric field to form, all avalanches will therefore be confined to a small volume of the gas immediately surrounding the anode wire. Particle tracks will generally be formed at arbitrary positions within the gas, so the probability is small that a given track intersects this small multiplying volume.

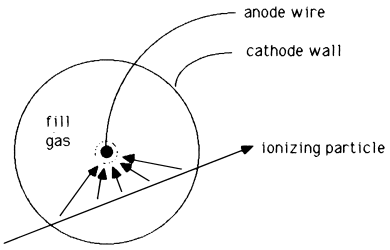

FIGURE 6 A cross-sectional view of a cylindrical gas-filled proportional counter. Free electrons produced through ionization of the gas along the track of the ionizing particle drift inward along radial field lines. They are multiplied through the avalanches formed in the region immediately surrounding the anode wire.

Under these conditions, the electrons formed along the track simply drift inward along radial field lines toward the wire. Each of these electrons creates an avalanche of approximately equal size when it reaches the multiplying region near the anode wire surface. These conditions ensure that nearly every original ion pair is multiplied by the same factor, and the counter remains in the proportional mode of operation.

Proportional counters are widely applied to the measurement of both heavy charged particles and fast electrons. In the latter case, however, one cannot usually stop the fast electron in the gas, so the size of the pulse that is produced no longer reflects the initial particle energy. Proportional counters of certain types are also used for the detection of neutrons through the secondary charged particle produced in some neutron interactions. Proportional counters are almost never applied in the measurement of gamma rays since the interaction probability of gamma rays in typical gas dimensions is very low, and the range of the secondary electrons produced in such reactions exceeds that of the dimensions of typical gas counters. Under these conditions, information on the energy of the gamma rays is lost.

C. Geiger–Mueller Counters

In any avalanche, some excited atoms will be formed along with those that are fully ionized by electron impact. These excited atoms, when they return to the ground state typically emit the excess energy in the form of an ultraviolet photon. If the size of the avalanche is small, relatively small numbers of such photons are produced and they have little further consequence. However, if the electric field is high enough so that avalanches become very large, many such ultraviolet photons emerge from the vicinity of the avalanche. They may travel relatively long distances through the gas, and some may cause further ionization by removing an electron from one of the less tightly bound outer shells of another gas molecule. Should such an event occur, a new ion pair is formed that will eventually trigger a second avalanche at a new position in the counter. Thus, a mechanism for the spread of avalanches is present. Once the probability approaches unity that a given avalanche spawns another through the propagation of ultraviolet photons, the entire process becomes a chain reaction in which a single initial avalanche can trigger an unlimited number of additional avalanches at other positions within the detector. Once this condition is reached, the detector enters the "Geiger–Mueller region" of operation. Under these circumstances, the size of the charge produced within the detector grows without bound, until it is limited by external factors. These factors relate to the growth of space charge represented by all the slowly moving positive ions that have been left behind in each avalanche. Eventually, the density of these positive ions is sufficient to reduce the electric field in the vicinity of the anode wire to the point that further avalanches cannot occur. This point is always reached after a fixed number of positive ions and electrons have been formed, so all pulses from a Geiger tube under constant conditions are of equal size. As a result, all information is lost on the number of ion pairs initially formed along the track of the incident particle.

Geiger–Mueller detectors (commonly called simply "Geiger tubes") are therefore useful only as simple counters of radiation interactions and cannot be used for measurement of radiation energy. Nonetheless, they have maintained a level of popularity because of the large amplitude of the output pulse, which permits very simple counting electronics to be used with these devices. They produce, in principle, a constant size output pulse for any particle that produces at least one ion pair within its active volume. As a result, Geiger tubes show nearly 100% counting efficiency for all fast electrons and charged particles that enter the active volume of the tube. Counting efficiency for gamma rays is only a few percent because the probability of interaction of typical gamma rays in few centimeters of gas is very low. Most gamma rays are detected instead by interactions that occur in the solid wall of the tube for which the secondary electron eventually finds its way into the counter gas volume.

IV. SEMICONDUCTOR DETECTORS

Devices can be fabricated from semiconductor materials that function in a similar manner to pulse-type ion chambers. By replacing the gas with a semiconductor, a number of beneficial changes take place. The role of the ion pairs as charge carriers formed in the gas by the radiation is now played by electron–hole pairs formed in the bulk of the semiconductor material. Because only about 3 eV are required to create one electron–hole pair compared with about 35 eV per ion pair in a typical gas, the number of charge carriers per unit energy loss is higher by a factor of ten. The electrical signal that is produced as these charge carriers are collected is therefore of larger amplitude and more easily processed in the presence of electronic noise. Furthermore, the statistical fluctuations are smaller in the number of charge carriers produced for a given energy deposition. For these reasons, the energy resolution attainable in semiconductor detectors is the best that can be achieved in the common types of detector devices and can easily reach a few tenths of a percent.

The fact that the detection medium is now a solid rather than a gas also has significant benefit. The ranges of typical heavy charged particles, such as alphas, are now measured

in micrometers rather than centimeters, and the thickness of the detector needed in these applications is therefore much smaller. Fast electrons now have ranges of a few millimeters and can also be fully stopped within the detector active volume. Therefore, energy measurements can be extended to beta particles and other fast electron sources. Perhaps of greater importance, the secondary electrons produced by gamma-ray interactions can also be fully absorbed. Therefore, semiconductor detectors can be applied to the important area of *gamma-ray spectroscopy*, in which the goal is to measure the individual gamma-ray energies emitted from a given source.

A typical semiconductor detector used for heavy charged particle measurements (such as alpha particle spectroscopy) consists of a wafer of silicon perhaps 0.5 mm thick and 1–2 cm in diameter. One configuration is shown in Fig. 7. Although the silicon is of high purity, it is always mildly either *n*- or *p*-type because of low-level donor or acceptor impurities. A heavily doped surface layer on one side of the wafer is made of the opposite type to the wafer itself, and the resulting *n*–*p* junction is operated as a reverse biased diode. A *depletion region* is created near the junction in which the population of electron–hole pairs is greatly suppressed. Raising the reverse bias voltage causes the depletion region to increase in thickness, and it can be made to extend all the way to the opposite surface of the wafer.

Under these conditions, the electron–hole pairs that are created along the track of a charged particle quickly move apart toward the opposite surfaces of the wafer. This flow of charge carriers is the basic electrical signal that can be sensed in an external measuring circuit. Charge collection times in typical thin silicon detectors are roughly 10 nsec for electrons and twice that value for holes. Signals with fast rise times are therefore observed from such detectors, and they can be used to good advantage in coincidence and timing applications.

For gamma rays, it is more attractive to use germanium rather than silicon because of its higher atomic number (32 versus 14). Even with the larger photoelectric cross section of germanium, it is unlikely that a gamma ray of typical energy will be fully absorbed in an initial photoelectric interaction. Instead, Compton scattering is generally more probable, and the gamma ray may scatter several times before its energy is reduced to the range in which photoelectric absorption becomes dominant. If a final photoelectric absorption takes place within the detector volume, then the entire energy of the gamma ray has been absorbed in the detector, and the gamma ray is recorded in the full energy peak of the pulse height spectrum. Detectors with large volume have a greater probability of preventing escape of the scattered gamma ray before its energy is fully absorbed, and thus enhance the buildup of full-energy peaks in the spectrum. Germanium gamma-ray detectors are therefore usually made in *coaxial* geometry starting with the largest cylindrically shaped germanium crystal that can be fabricated. A small part of the core of the cylinder is removed, and electrodes are placed on the inner and outer cylindrical surfaces. One of these electrodes creates the *p*–*n* junction and the voltage is raised until the depletion region extends throughout the germanium volume to the opposite electrode. Because of the large dimensions of these detectors, collection times for holes and electrons are now typically several hundred nanoseconds. The largest active volumes for germanium detectors now produced commercially are approaching 1000 cm^3.

Because of the small band gap energy in semiconductors, it is possible for electron–hole pairs to be spontaneously generated from the thermal energy present in the crystal. The presence of these carriers causes a leakage current that is observed without the presence of radiation, and the fluctuations in this leakage current contribute noise that can spoil the excellent energy resolution attainable with these detectors. For thin silicon detectors used for charged particle measurements, the leakage current is sufficiently low so that these detectors can be generally used at room temperature. However, large-volume silicon and all germanium detectors must generally be cooled during operation. This cooling is normally accomplished by placing the detector in thermal contact with a storage dewar filled with liquid nitrogen.

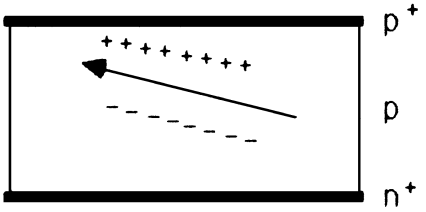

FIGURE 7 Cross-sectional view of a typical planar semiconductor detector. Electrons and holes formed along the track of an ionizing particle drift in opposite directions toward electrodes fabricated on the flat surfaces of the semiconductor wafer.

V. SCINTILLATION DETECTORS

In several categories of transparent materials, visible light is generated from the energy deposited by radiation. The total intensity of the light flash observed from the absorption of a charged particle or fast electron is a measure of its total energy. An electrical pulse is produced by converting the flash of light either into electrons in a photomultiplier tube or into electron–hole pairs in a semiconductor photodiode. Figure 8 shows a diagram of a representative scintillator–photomultiplier assembly.

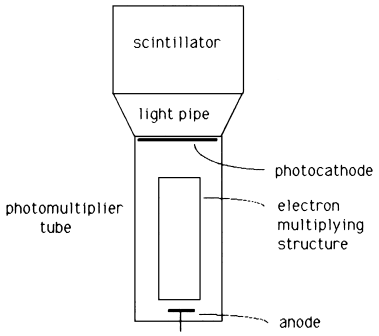

FIGURE 8 A typical scintillation detector is shown. Light generated by the incident radiation in the scintillator is transmitted through a transparent light pipe to a photomultiplier tube, where it is converted to an electrical signal.

The conversion of particle energy into light and subsequently into an electrical signal involves many inefficient steps. Therefore, the number of charge carriers produced for a typical pulse may only be a few hundred, compared with many thousands in gas-filled or semiconductor materials. The statistical fluctuations in so small a number are a major factor that limits the energy resolution in scintillators to typically 5–10%. Despite this poor energy resolution, scintillators remain popular as radiation detectors because they offer several other unique advantages. For example, they can be fabricated in much larger sizes than typical semiconductor detectors. Some scintillation materials also provide output pulses with much faster rise time than alternative devices. For gamma-ray applications, materials with much higher atomic number than that of germanium are available as scintillators to promote complete absorption of gamma-ray energy in detectors of relatively small size.

A. Inorganic Crystals

Some of the most common scintillation materials are used in the form of single crystals of inorganic materials. Sodium iodide activated with a trace amount of thallium [abbreviated NaI(Tl)] converts about 15% of fast particle energy into light, a figure that is the highest among commonly used scintillation materials. The high atomic number of the iodine component (53) ensures that large crystals of sodium iodide will fully absorb the energy of a large fraction of all incident gamma rays. Since crystals are commercially available that are many centimeters in dimension, the detection efficiency for gamma rays in large scintillators is generally much larger than for germanium detectors. Typical energy resolution measured in NaI(Tl) is about 7% measured at 0.662 MeV. Thallium-activated cesium iodide is also an efficient scintillator and shows a high interaction probability per unit pathlength for gamma rays.

Another material known as BGO ($Bi_4Ge_3O_{12}$) has an even higher effective atomic number than iodine and therefore shows the highest gamma-ray efficiency of any common scintillator. Its light output is an order of magnitude smaller than that of NaI(Tl), so its energy resolution is always poorer. Nonetheless, the better detection efficiency is often an attractive advantage that outweighs the sacrifice in energy resolution in some applications.

Other inorganic scintillators such as gadolinium silicate, yttrium aluminum perovskite, and lutetium oxyorthosilicate have been developed more recently. They are generally doped with a small concentration of cerium to serve as an activator. They offer light emission times in the tens of nanoseconds, much faster that the hundreds of nanoseconds characteristic of the more traditional NaI(Tl), CsI(Tl), or BGO. Although their light yield is generally lower, the fast response of these newer materials can be a decided advantage in timing or high-counting rate applications.

B. Organic Scintillators

Some organic molecules possess an electronic structure that when excited by the passage of a charged particle will emit light upon de-excitation. This process does not depend on the physical state of the molecule so organic scintillators can exist in the form of organic crystals, liquid solutions, or solid solutions in a plastic matrix. Organic scintillators tend to emit the scintillation light over a much shorter period of time (typically nanoseconds) compared with inorganic materials. For this reason, organic scintillators are commonly applied in fast timing or coincidence measurements.

Organic scintillators can be dissolved in some solvents to form a liquid scintillator that is widely used to detect low-energy beta particles, such as those emitted in the decay of ^{3}H and ^{14}C. The sample to be counted is also dissolved in the same solution, allowing the weakly penetrating beta particles to be detected without an intervening entrance window or dead layer. Because of their large hydrogen content, organic scintillators are also widely used in the measurement of fast neutrons through the recoil protons produced by elastic scattering of the neutrons from hydrogen nuclei.

C. Photomultiplier Tubes and Photodiodes

The light emitted by scintillators is most commonly converted to an electrical signal in a *photomultiplier tube*. Here, the first element is a photocathode that typically converts 10–20% of the incident light photons into low-energy electrons. These electrons are then electrostatically drawn into a multiplying structure in which secondary electron

emission processes are used to increase the electron number of factors of 10^5 to 10^7. The amplified pulse of the electrons is then collected at the tube output anode to form the electrical pulse. Photomultipliers tubes can preserve the good timing characteristics of pulses from fast scintillators, introducing an additional timing spread of only a few nanoseconds. They provide a nearly noiseless amplifications of the original number of photoelectrons, so the energy resolution observed from scintillators is normally dominated by the statistics in the small number of photoelectrons formed prior to the multiplication stage.

There have been recent developments in the substitution of semiconductor photodiodes for photomultiplier tubes to detect the light from scintillators. In these devices, the light produces electron–hole pairs in much the same manner as light incident on a solar cell. By applying an electric field, these charge carriers can be efficiently collected to produce an output electrical pulse. Because there is no charge multiplication, the size of the signal is much smaller than that from photomultiplier tubes. As a result, much more attention must be paid to suppress sources of noise in order to preserve energy resolution from the scintillator.

SEE ALSO THE FOLLOWING ARTICLES

DOSIMETRY • NUCLEAR ENERGY, RISK ANALYSIS • NUCLEAR FACILITIES EMERGENCY PLANNING • NUCLEAR SAFEGUARDS • RADIATION PHYSICS • RADIATION SHIELDING AND PROTECTION

BIBLIOGRAPHY

Cooper, P. N. (1986). "Introduction to Nuclear Radiation Detectors," Cambridge Univ. Press, London and New York.

Debertin, K., and Helmer, R. G. (1988). "Gamma- and X-ray spectrometry with semiconductor detectors," North-Holland, Amsterdam.

Eichholz, G., and Poston, J. (1979). "Principles of Nuclear Radiation Detection," Ann Arbor Science Publishers, Ann Arbor, Michigan.

Kleinknecht, K. (1986). "Detectors for Particle Radiation," Cambridge Univ. Press, London and New York.

Knoll, G. F. (2000). "Radiation Detection and Measurement," 3rd ed. Wiley, New York.

Tsoulfanidis, N. (1995). "Measurement and Detection of Radiation," 2nd Hemisphere Publishing Corporation, Washington, DC.



Nuclear Reactor Materials and Fuels

Massoud T. Simnad
University of California, San Diego

I. Summary of Nuclear Reactor Materials and Fuels
II. Nuclear Fuel Element Development
III. Nuclear Fuel Cycle
IV. Preparation and Properties of Nuclear Fuels
V. Fuel Element Design and Operation
VI. Fuel Element Experience in Power Reactors
VII. Neutron Moderator Materials
VIII. Reactor Control Materials
IX. Structural Materials

GLOSSARY*

Alpha emitter Element with a nucleus that loses excess energy by spontaneously releasing an alpha particle, which is a positively charged helium ion.

Beta decay Mode of radioactive decay in which a beta particle (electron or positron) is emitted from a nucleus.

Blanket Fertile or largely fertile material surrounding the cores of certain types of reactors, usually breeder reactors.

Breeder reactor Nuclear reactor that produces more fissionable atoms than it consumes; this is done by transmuting fertile material into fissionable material.

*From Kaufman, A. R., ed. (1962). "Nuclear Fuel Elements," Wiley, New York.

Burnable poison High-cross-section neutron absorber material blended with reactor fuel or cladding that is gradually changed to a low-cross-section material under neutron radiation.

Burnup Measure of the number of fissionable atoms that have undergone fission. It is usually expressed as the atomic percent of the total uranium atoms that have fissioned in the fuel, as megawatt-days of energy generated per ton of uranium, or as gigajoules of energy per kg of uranium. Other definitions include fissions/cc or atomic percent of fissions per total atoms present in the fuel.

Cladding Protective material surrounding the fuel that acts as a barrier between the fuel and the coolant medium and also prevents escape of the fission products.

Control rod Device containing material with a high neutron absorption cross section that is used to govern the fission rate of a nuclear reactor by absorbing excess neutrons.

Conversion ratio Number of fissionable atoms produced per atom fissioned in a reactor.

Cross section Probability that a given nuclear reaction will occur between a nucleus and an incident particle (e.g., a neutron). It has the dimensions of area, and the unit of cross section, called a barn, is $10^{-24}/cm^2$ in magnitude.

Decay heat Heat generated by radioactive material, particularly heat from the decay of fission products in irradiated fuel.

Disintegration Spontaneous nuclear transformation resulting in the emission of photons and/or particles from the nucleus.

Enriched uranium Uranium having a ^{235}U isotope content greater than that of natural uranium (0.7115 wt. %).

Fast breeder reactor Nuclear reactor in which there is little moderation and where fission is induced primarily by fast neutrons.

Fertile material Material capable of being transmuted into a fissionable material by capture of a neutron (^{232}Th, ^{238}U).

Fission The splitting of a fissionable nucleus (^{233}U, ^{235}U, ^{239}Pu, ^{241}Pu) into two nuclides (fragments), each of which has about one half of the mass of the original nucleus. In addition to the fission fragments, neutrons and gamma rays are produced during fission.

Fission product Nuclide produced directly by the fission of a fissionable nuclide or by subsequent radioactive decay. Thirty five fission-product elements, from zinc through gadolinium, have been identified from slow neutron fission.

Moderator Material used in a nuclear reactor to decelerate neutrons from the high velocities at which they are released. Neutrons lose velocity by scattering collisions with nuclei of the moderator. A good moderator has high scattering cross section, low atomic weight, and low neutron-absorption cross section.

Neutron fluence Total number of neutrons passing through a unit surface area in a specified time period.

Neutron flux Number of neutrons (thermal or fast) passing through unit surface area per unit time, that is, neutrons/(cm^2 sec) or neutrons (m^2 sec).

Reflector Layer of material surrounding the core of a nuclear reactor that serves to deflect escaping neutrons and return many to the core.

Thermal reactor Nuclear reactor in which fission is induced primarily by thermal neutrons (those in equilibrium with the material of the core).

THE SELECTION OF MATERIALS and fuels for nuclear power reactors involves a multidisciplinary approach, including physics, chemistry, materials science and engineering, systems analysis, and economics. There is also a need to consider the environmental and political factors that have an important impact on the acceptance of nuclear power.

The continuing growth of nuclear energy (over 400 power reactors in 33 countries in 2000) has been made feasible by the successful development of reactor fuels and materials. The goals of low fuel-cycle costs and reliable performance in the fuel elements have been achieved. The materials and fuels have to accommodate the severe operating conditions set by the designs of the reactor cores, including thermal and mechanical stresses and prolonged exposure to the coolants and nuclear irradiation.

I. SUMMARY OF NUCLEAR REACTOR MATERIALS AND FUELS

A. Classification

Nuclear reactor materials and fuels can be classified as follows.

1. Fuel and fertile materials and their cladding and fuel elements and their structural components.
2. Fuel cycles and fuel systems, which include materials preparation, fuel element fabrication, fuel reprocessing, fuel element refabrication, and the management of nuclear wastes.
3. Moderator and reflector materials, which include liquids such as water and heavy water and solids such as beryllium, beryllium oxide, graphite, and metal hydrides.
4. Coolants, which may be liquids (water, heavy water, sodium, molten salts, and organics) or gases (helium and carbon dioxide).
5. Control materials and component, which use materials with high neutron-absorption cross sections, such as boron, cadmium, indium, silver, hafnium, and rare earths.
6. Shielding materials, which serve to attenuate neutrons and gamma rays. The internal shielding in the reactor vessel is generally provided by the moderating materials and steel, and the outer shielding is usually concrete.
7. Thermal insulation materials, which limit heat loss from the reactor core to surrounding structural materials and containment vessel. The insulator materials may consist of refractory compounds or metal foils.
8. Structural materials, which include duct or coolant channels, solid moderator and reflector blocks, core support grid structures, coolant piping, heat exchanger materials, reactor vessels, and containment structure.

B. Power Reactors

The engineering designs of nuclear reactors are largely governed by materials properties. The choices of nuclear fuels and designs are limited by the characteristics of the reactor cores, namely, the fuel enrichment, the nature of the moderators and coolants selected, the operating temperatures and pressures in the core, the fuel burnup and exposure time, and the average neutron energy and fluence. The most important nuclear power reactor concepts at present include the following.

1. Light-water moderated and cooled reactors (LWR). These may be either pressurized-water (PWR) operating at about 14 MPa pressure and 300°C or boiling-water (BWR) operating at about 7 MPa and 300°C. In the PWR, the heat is transferred from the core to steam generators via intermediate heat exchangers, whereas in the BWR, the coolant water boils at the top of the core and furnishes steam directly to the turbines. The fuel consists of slightly enriched UO_2.
2. Heavy-water moderated reactors (CANDU). In these reactors, the heavy-water moderator is contained in a calandria, through which insulated pressure tubes containing the fuel elements circulate the pressurized light-water coolant at 15 MPa and 300°C to transfer the heat from the fuel elements to steam generators. The fuel is natural UO_2.
3. Carbon-dioxide gas-cooled graphite moderated reactors. The first generation of these reactors (Magnox) are cooled by circulating CO_2 gas. The fuel elements consist of natural-uranium metallic fuel rods clad with a magnesium alloy. The second-generation advanced gas-cooled (AGR) reactors use stainless steel clad slightly enriched UO_2 fuel rods, which permit steam generation at higher temperatures.
4. High-temperature helium gas-cooled reactors (HTGR). In these reactors, graphite serves as moderator, reflector, and core structure material. Coated-particle oxide or carbide fuel is used. The helium gas coolant (700–1000°C and 5–8 MPa) transfers heat to steam generators.
5. Liquid-metal cooled fast breeder reactors (LMFBR). Here the liquid sodium in the primary system transfers the heat from the core to an intermediate heat exchanger, from which sodium transfers heat to the steam generator. The fuel consists of (U, Pu)O_2 pellets contained in stainless steel cladding.

II. NUCLEAR FUEL ELEMENT DEVELOPMENT

The low fuel-cycle costs and the high reliability of the fuel elements allow nuclear reactors to compete with other energy sources, in spite of the high capital costs for their construction. Above all, the fuel must meet the regulatory requirements for safety in the operation of the plants. The fuel elements must accommodate power cycles and meet the design objectives, such as adequate heat transfer, nuclear reactivity, retention of fission products, inherent safety under accident conditions, and retention of structural and mechanical integrity.

The plant costs have been reduced by increasing the thermal output of the core and using higher quality steam. Improvements in fuel technology and heat transfer have permitted the use of higher fuel heat flux, which has increased core performance. The use of burnable poisons in the fuel has enabled control of the large excess reactivity required at initial startup with high fuel exposure cores.

There have been successful developments to improve performance by means of better fuel management and fuel cycling, advanced fuel design, fuel-cycle cost reduction, and more reliable reactor components. The ability to predict fuel element performance based upon design modeling has been a major development in recent years. More accurate and extensive data are required on critical properties of the fuel and cladding to provide the needed engineering relationships. A most useful parameter for evaluating the performance of a fuel rod is the thermal power per unit length, which is directly related to the integral of the thermal conductivity of the fuel material from a permissible temperature at the center of the cylinder to the designed temperature at the edge.

The fuel materials that have been developed for use in power reactors include metals and alloys, oxides, carbides, nitrides, and hydrides. The configurations used include cylindrical pellets, long extruded rods (metal fuels only), spherical elements (graphite matrix with coated particle dispersion fuel for the AVR-HTGR), dispersions in a matrix material (cermets), coated particles, and fluids (molten salt reactor and aqueous homogeneous reactor experiments). The most widely used fuel material in power reactors is uranium dioxide in the form of cylindrical, cold pressed, and sintered pellets.

The stages in the development of fuel elements are listed in Table I. The major components and materials in nuclear systems are summarized in Table II.

The most extensively used ceramic fuels are the oxides, namely, UO_2, (U, Pu)O_2, and ThO_2, all of which have the face-centered cubic fluorite structure and are completely miscible in solid solution. A number of reactors have also operated with the carbide fuels UC, UC_2, and (U,Pu)C, and ThC_2. Nitride fuels have been prepared and irradiated in test reactors. The properties of nuclear fuels that have been studied or used in fuel elements are summarized in Table III.

TABLE I Stages in Fuel Element Development[a]

1. Define the reactor type: purpose, coolant, and performance.
2. Calculate fuel element dimensions, heat fluxes, design features, physics, and critical assemblies.
3. Consider the range of available fuels and cladding materials and pick the most suitable for the design.
4. Consider fuel and cladding properties, both out-of-reactor and in-reactor.
5. Examine fuel-cladding interactions (chemical and physical).
6. Develop a preliminary fuel element design.
7. Develop fabrication procedures for fuel, cladding, and fuel element if necessary.
8. Develop mathematical models of the fuel element; specify and obtain input data.
9. Test fuel elements: out-of-reactor (thermal-hydraulics), in-reactor (on increasing scale), and transient tests.
10. Analyze test: post-irradiation examination, failure mechanisms, run beyond cladding breach, feedback to models, and improvements in design.
11. Optimize via iterations of 8, 9, and 10. Write detailed design and manufacturing specifications.
12. Plan production: quality assurance, NDE, SPM assay, safeguards, safety, critically control, economics, and automation.
13. Establish interfaces with the rest of the fuel cycle: mining, enrichment, reprocessing, and waste management.
14. Obtain license for qualified cores.

[a] From Frost, B. R. T. (1982). "Nuclear Fuel Elements," Pergamon, New York.

The oxide ceramic fuels have a number of advantages and disadvantages compared with other forms of nuclear fuels. The advantages include high neutron utilization, excellent irradiation stability, exceptional corrosion resistance in conventional coolants, high melting point, compatibility with cladding, ease of manufacture, and high specific power and power per unit length of fuel pin. The disadvantages include low thermal conductivity, poor thermal shock resistance, and relatively low fissionable atom density compared with metallic and carbide fuels. The relatively high melting points of the oxide fuels compensate partially for the low thermal conductivity.

The viability of the nuclear industry depends primarily on the lower cost of the nuclear fuel cycle compared with fossil fuels. The nuclear fuel-cycle cost includes the costs of the unit operations of extracting, preparing, reprocessing, and disposing of nuclear fuels and the credit allowed for reclaimed uranium and plutonium. The carrying charges during the residence time in the fuel cycle and the financing costs may reach 25% of the total cost. The fabrication costs of the fuel elements for LWRs correspond to about 20% of the total electricity generation cost.

The limitation set by the fuel burnup at discharge is governed by the irradiation behavior of the materials and/or the reactivity characteristics. The natural uranium required to prepare the initial in-core fuel loading that is required in an 1100-MW(e) reactor is approximately 580 tons for a light-water reactor, 450 tons for an HTGR, and 700 tons for a fast breeder reactor. The recycling of Pu in light-water reactors may decrease the uranium requirements by about one-third. Approximately 200 kg of Pu is produced per year in an 1100-MW(e) LWR.

Fuel management aims at the attainment of the most economical use of the fuel within the constraints set by the fuel design, the operation of the reactor, and the various cost items involved in the financing of the reactor. The cost of nuclear fuel must also include costs for the unique requirements of safety and safeguarding of enriched and irradiated fuels in processing and reprocessing facilities and costs for precautions against illegal diversion.

The judicious selection of materials and fuels for the reactor cores must consider the design, fabrication, and operation of the reactor. The effects of irradiation on the physical, mechanical, chemical, and isotopic changes during operation of the reactor must be known in advance.

TABLE II Major Components and Materials in Nuclear Systems

Reactor component	Reactor system material				
	BWR	PWR	CANDU	AGR	LMFBR
Core					
Fuel/cladding	UO_2/Zircaloy	UO_2/Zircaloy	UO_2/Zircaloy	UO_2/SS	UO_2, 25 ± 5% PuO_2/SS
Control materials	B_4C/Type 304 SS	AglnCd alloy	B_4C/SS	B_4C/SS	B_4C/SS
	UO_2-Gd_2O_3/Zircaloy 2	B_4C-Al_2O_3; borosilicate glass			
Breeding blanket	NA	NA	NA	NA	UO_2/Type 316 SS
Reactor vessel					
Shell	Low-alloy steel (SA533 Gr. B)	Low-alloy steels (SA533 Gr. B., SA508)	Zircaloy tubes in Al calandria	Prestressed concrete	Type 304 SS
Cladding	Type 308L SS (SA264)	Type 308 SS: Inconel 617			NA

TABLE III Properties of Fuels

Property	U	U–10% Mo	U_8Si
Melting point, K	1405	1423	1203
Density, g/cm^3	19.12	17.12	15.58
Heavy metal density, g/cm^3	19.12	17.12	15.58
Crystal structure	*a*	*b*	bet
Thermal conductivity, W/cm-K	0.35 (670 K)	0.29 (870 K)	0.2 (to 1170 K)
Thermal expansion, 10^6/K	19 (to 920 K)	12.3 (to 670 K)	16 (to 1070 K)
Electrical resistivity, ohm-cm	35×10^6 (298 K)	—	75×10^6 (to 1070 K)
Specific heat, cal/g-K	0.026 (to 773 K)	0.035 (to 773 K)	0.043 (to 773 K)
Heat of fusion, cal/mol	4760	—	—
Vapor pressure, atm	5×10^6 (2300 K)	5×10^6 (2300 K)	—
Debye temperature, K	200 K	—	—
Free energy of formation, kcal/mol	—	—	—
Heat of formation, kcal/mol	—	—	—
Entropy, cal/mole-K	—	—	—
Poisson ratio	0.21	0.35	—
Modulus of rupture, MPa	—	—	
Modulus of elasticity, MPa	1.7×10^6	10^6	—
Shear modulus, MPa	0.85×10^6	3×10^4	—
Tensile strength, MPa	400	300	600
Compressive strength, MPa	—	—	2000
Thermal neutron fission cross section, barns	4.18 (natural)	4.18 (natural)	0.159 (natural)
Thermal neutron absorption cross section, barns	7.68 (natural)	6.68 (natural)	0.293 (natural)
Eta (η)[d]	1.34	1.34	1.34
	UN	**$(U_{0.8}Pu_{0.2})O_2$**	**$(U_{0.8}Pu_{0.2})C$**
Melting point, K	3035 (1 atm N_2)	3023	2758 ± 25
Density, g/cm^3	14.32	11.04	13.58
Heavy metal density, g/cm^3	13.52	9.80	12.3 (2.6 Pu)
Crystal structure	fcc (NaCl)	Cubic (CaF_2)	fcc (NaCl)
Thermal conductivity, W/cm-K	0.2 (1023 K)	0.027 (1270 K)	0.18 (to 1270 K)
Thermal expansion, 10^6/K	9.3 (to 1270 K)	10.3 (to 1270 K)	12.2 (to 1670 K)
Electrical resistivity, ohm-cm	1.75×10^4 (298 K)	2×10^4	1.82×10^4
Specific heat, cal/g-K	0.049 (298 K)	0.10	0.047 (298 K)
Heat of fusion, cal/mol	12.750	—	10.920
Vapor pressure, atm	4.5×10^7 (2000 K)	—	8.1×10^2 (2000 K)
Debye temperature, K	—	—	—
Free energy of formation, kcal/mol	−64.75 (298 K)	—	21.00
Heat of formation, kcal/mol	−70.70 (298 K)	—	21.18
Entropy, cal/mole-K	15.0 (298 K)	—	14.80
Poisson ratio	0.263	0.28	0.295
Modulus of rupture, MPa	—	—	—
Modulus of elasticity, MPa	—	1.8×10^6	
Shear modulus, MPa	1.01×10^6	0.53×10^4	0.78×10^6
Tensile strength, MPa	—	—	—
Compressive strength, MPa	—	—	—
Thermal neutron fission cross section, barns	0.143 (natural)	—	—
Thermal neturon absorption cross section, barns	0.327 (natural)	—	—
Eta (η)[d]	—	—	—

[a] Orthorhombic (<936 K), tetragonal (936–1043 K), body-centered cubic (>1043 K).
[b] Orthorhombic plus tetragonal (<838 K), body-centered cubic (>838 K).

(continues)

TABLE III (*Continued*)

U–Fs	UO_2	UC	UC_2
1275	3138	2780 ± 25	2773
18	10.96	13.61	12.86
18	9.65	12.97	11.68
bcc (>100 K)	fcc (CaF_2)	fcc (NaCl)	fcc (CaF_2)
0.33 (820 K)	0.03 (1270 K)	0.216 (to 1270 K)	0.35 (to 1270 K)
17 (to 820 K)	10.1 (to 1270 K)	11.6 (to 1470 K)	18.1 (1970 K)
—	1×10^4	40.3×10^6 (298 K)	—
—	0.065 (700 K)	0.048 (298 K)	0.12 (298 K)
—	16.000	11.700	—
—	8.5×10^8 (2000 K)	1.7×10^{10} (2300 K)	2.5×10^{11} (2300 K)
—	<600 K, 870 K	—	—
—	−218 (1000 K)	−23.4 (298 K)	
—	−260 (to 1500 K)	−23.63 (298 K)	−23 (298 K)
—	18.6 (298 K)	14.15 (298 K)	16.2 (298 K)
—	0.3	0.284	—
—	80	—	—
6×10^6	1.8×10^6	2×10^6	—
—	0.75×10^6	0.873×10^6	—
270	35	—	—
—	1000	350	—
	0.102 (natural)	0.137 (natural)	0.112 (natural)
	0.187 (natural)	0.252 (natural)	0.207 (natural)
1.34	1.34	1.34	1.34
$(U_{0.8}Pu_{0.2})N$	Th	ThO_2	ThC
3053	2028	3663	2898
14.31	11.72	10.00	10.96
13.5 (2.7 Pu)	11.72	9.36	10.46
fcc (NaCl)	fcc < 1618 K < bcc	Cubic (CaF_2)	Cubic (NaCl)
0.19 (to 1270 K)	0.45 (923 K)	0.03 (1270 K)	0.28 (to 1270 K)
9.8 (to 1270 K)	12.5 (to 923 K)	9.32 (to 1270 K)	7.8 (to 1270 K)
—	15.7×10^6	—	25×10^6 (298 K)
0.046 (298 K)	0.038 (970 K)	0.07 (298 K)	0.043 (298 K)
12.590	3300	25.000	—
2.1×10^6 (2000 K)	1.3×10^{14} (1500 K)	5×10^9 (2000 K)	—
—	163.5	200 K	—
—	—	−279 (298 K)	−6.4 (298 K)
71.10	—	−293 (298 K)	−7.0 (298 K)
—	—	15.59 (298 K)	12.0 (298 K)
0.275	0.27	0.17	—
—		80	—
—	7×10^4	14×10^4	—
1.02×10^4	2.7×10^4	1×10^5	—
—	230	100	—
—	—	1500	450
—	—	—	—
—	7.56	—	—

[c] U containing 5% fissium (0.22% Zr + 2.5% Mo + 1.5% Ru + 0.3% Rh + 0.5% Pd). U-5% fissium is bcc above 10,000 K, bcc + monoclinic U_2Ru between 825 K and 1000 K, and bcc + U_2Ru + tetragonal below 825 K.

[d] Number of fission neutrons released per neutron absorbed.

The primary objectives in fuel management are not only to minimize the fuel-cycle costs but also to allow optimum utilization of the fuel and to assure availability of fuel resources. Fuel management includes (1) the out-of-core activities of planning, budgeting, purchasing, designing, and fabricating; (2) the planning of the in-core utilization of the fuel; and (3) the control of the fuel cycle.

The design of the fuel elements aims to achieve the goals of adequate heat transfer, nuclear reactivity, retention of fission products, inherent safety under accident conditions, and retention of structural and mechanical integrity. In addition, the important economic parameters must be considered, namely, reliability and high specific power and burnup, optimum fuel management, high neutron utilization, and realistic specifications for manufacture and quality assurance. A 1000-MW(e) LWR is fueled with about 9 million UO_2 pellets contained in approximately 150 km of fuel rods, with 40 fuel rods per MW(e).

There is a tradeoff between the specific power and burnup limits of the fuel and the influence of these factors on the capital cost in relation to the core dimensions, components, pressure vessel, and containment sizes. The design of the core reflects the need to optimize the critical parameters by suitable choice of fuel enrichment, distribution of fuel, control rod and burnable poison distribution, and so forth. In LWRs, the peak rod power is about 19 kW/ft and up to 25 kW/ft under power transients. The ratio of peak to average power falls in the range 2.8–3.0.

Fuel performance predictions are based on design modeling, which includes both the results of experiments and analytical studies. The principal operating conditions governing fuel lifetime are the burnup (MWd/kgU) and specific rod power (kW/m). Also, the fission gas pressure, ratchetting between the fuel and cladding, and irradiation effects on the cladding (swelling, loss of ductility, irradiation-creep, and fission product corrosion) influence the behavior of the stressed cladding. Allowance is made for the released fission gases by means of a large plenum volume in the fuel rod.

The Th-^{233}U cycle is the most advantageous of the fuel cycles in the thermal and epithermal regions. The thorium cycle also depends on the initial fissile charge of ^{235}U or Pu to generate the fissionable ^{233}U. The reactors that are based on the Th^{233}U cycle include the HTGR and the thermalh breeders MSBR, HWBR, and LWBR. The thorium cycle is associated with significantly higher conversion ratios and longer reactivity lifetimes compared with the uranium cycle. However, the fuel inventory and fuel fabrication and processing costs are also higher for the uranium cycle. Hence, increased uranium costs and lower interest rates favor the thorium cycle.

The fuel elements in power reactor cores are distributed in zones of different uranium enrichments. The highest enrichment is at the periphery of the core, to compensate for the lower neutron flux toward the periphery and thereby to achieve a flatter neutron flux profile and higher power output. At each refueling period (about once a year), the fuel elements are discharged from the central zone of the core, and the elements in the outer zones are moved inward. The fresh fuel elements are loaded into the vacated outer zone. The control rods are another core component that is periodically replaced. A 1000-MW(e) light-water reactor (LWR) has an initial fuel loading of low-enriched (2% to 3%) uranium of approximately 80,000 kg (80 metric tons) and a replacement fuel requirement of about 25,000 kg (25 metric tons) per year to make up the fuel that is consumed. Supplying the fuel for the 1000-MW(e) LWR requires the mining of 21.8×10^7 kg (240,000 short tons) of uranium ore, the processing of about 4.5×10^5 kg (500 tons) of uranium oxide into feed for the enrichment plants, and the fabrication of 8.3×10^4 kg (92 tons) of the enriched uranium oxide into 7.2×10^4 kg (80 tons) of reactor fuel elements for the initial core loading. The spent fuel elements contain several million dollars worth of unconsumed uranium and plutonium, as well as the fission products. The fuel reprocessing plants are designed to separate the fission products from the remaining fuel and to solidify the liquid radioactive waste for permanent disposal. The recovered fuel is recycled.

III. NUCLEAR FUEL CYCLE

A. Fissionable Materials and Fission Products

The fissionable isotopes used in nuclear reactors include ^{233}U, ^{235}U, ^{239}Pu, and ^{241}Pu. The fertile isotopes are ^{238}U and ^{232}Th. The fertile isotopes are converted into fissionable isotopes by neutron absorption (^{238}U into plutonium isotopes and ^{232}Th into ^{233}U). Natural uranium contains 0.71% ^{235}U, 99.28% ^{238}U, and 0.006% ^{234}U. Fuel enriched in ^{235}U, ^{233}U, or plutonium is used to provide greater latitude in selecting materials for use in the reactor system and to achieve higher burnup. Since ^{233}U and plutonium must be produced from thorium and ^{238}U, respectively, by neutron capture, the neutrons are provided initially by fission of ^{235}U (Fig. 1).

The isotope ^{239}Pu is present in minute quantities (1 part in 100 billion) in uranium ores. It is produced by neutron irradiation of ^{238}U by the reactions shown in Fig. 1. Short periods of irradiation produce mostly ^{239}Pu, and longer irradiations result in progressively more of the higher isotopes of plutonium, up to ^{246}Pu. The odd-number isotopes of Pu are fissionable, whereas the even-number isotopes have high neutron-absorption cross sections.

The nuclear fuel cycle includes (1) production of nuclear fuel (mining, milling, and enrichment), (2)

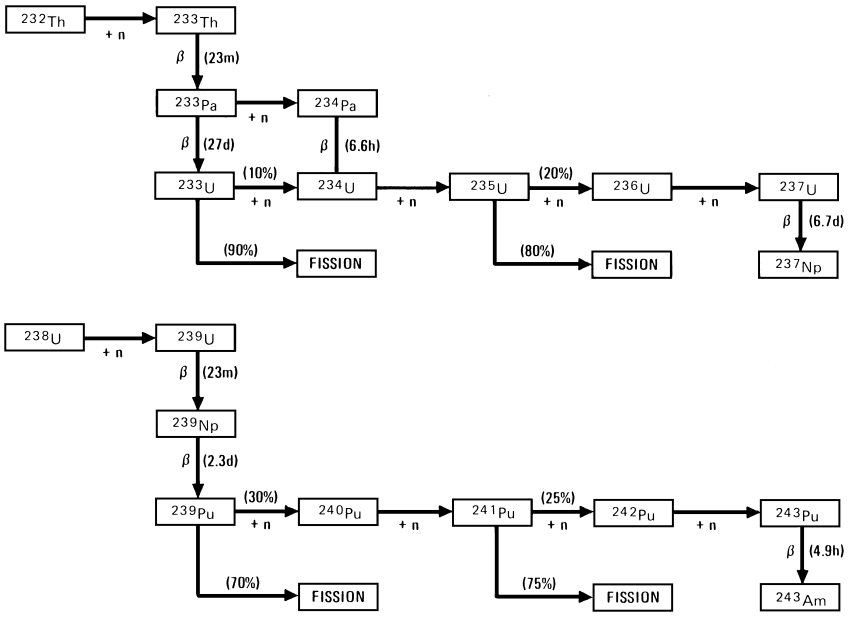

FIGURE 1 Nuclide chains originating with ^{232}Th and ^{238}U. [From M. T. Simnad and J. P. Howe (1979). *In* "Materials Science in Energy Technology" (G. G. Libowitz and M. S. Whittingham, eds.), Academic Press, New York.]

fabrication of fuel elements, (3) reprocessing and recycling of the spent fuel to recover and raise the uranium and plutonium content, and (4) storage of the radioactive waste (Fig. 2).

When the fissionable isotope content of the fuel is above 15%, special precautions must be taken to ensure that critical assemblies are not formed. Federal regulations require that the quantities of these materials in process are strictly controlled by administrative procedures and through appropriate design of the dimensions of the process equipment, as well as by placing neutron detectors at strategic points to warn of approach to criticality. Quality control is carried out by means of nondestructive and destructive evaluations. Nuclear fuels in their natural state have a low level of radioactivity and do not pose a significant hazard. However, irradiated fuel is highly radioactive and must be handled and treated in shielded facilities. Figure 3 and Table IV show the chain yields of fission products and their chemical states. Special precautions have to be taken to minimize dust formation and contamination in handling and fabricating ceramic fuels in powder or particle form.

Enrichment of the fuel in the fissile isotope ^{235}U is required for LWR, AGR, and HTGR power reactors. Hence, the uranium is extracted from the oxide in the form of the hexafluoride UF_6, which is processed through an isotope separation plant (Figs. 4 and 5). The plutonium produced in the fuel cycle is recycled in thermal or fast breeder reactors (Fig. 6).

Ceramic fuels can be fabricated into precise shapes (usually cylindrical pellets) that are clad in tubular thin-walled metal sheathing (cladding), which is back-filled with helium and endcapped. The cladding in water-cooled reactors is Zircaloy or stainless steel. It protects the fuel from the reactor coolant, retains the volatile fission products, and serves structurally to provide geometrical integrity. The clad fuel pins are assembled into fuel elements. The fuel elements are held in position by grid plates in the reactor core. The fuel burnup to which a reactor may be operated is expressed as megawatt-days per kilogram (MWd/kg), where MW(d) is the thermal output and kg the total uranium (sum of ^{235}U and ^{238}U). Recently, the units GJ/kg M (gigajoules/kg metal) have been adopted. In light-water power reactors, the core may be operated to about 35 MWd/kg (about 3.5% burnup) before fuel elements have to be replaced. In fast breeder reactors (LMFBRs) and high-temperature helium gas-cooled reactors (HTGRs), the burnups may exceed 100 MWd/kg (about 10% burnup of the heavy metal atoms). Burnup conversion factors are given in Table V.

The production of uranium hexafluoride UF_6 for the enrichment plants is carried out in conversion plants. The cost of this process is approximately 4% of the fuel-cycle cost. There are two commercial processes, namely, (1) the refining–fluoridation process (Kerr–McGee) and (2) the dry fluoride volatility process (Allied Chemical Co.). The refining–fluoridation process consists of solvent extraction of uranium from a nitrate solution, which is washed with water to remove impurities. The uranium is then reextracted into dilute nitric acid solution (0.01-*N* HNO_3), and the uranium oxide formed is reduced with hydrogen to UO_2, which is converted first to UF_4 (green

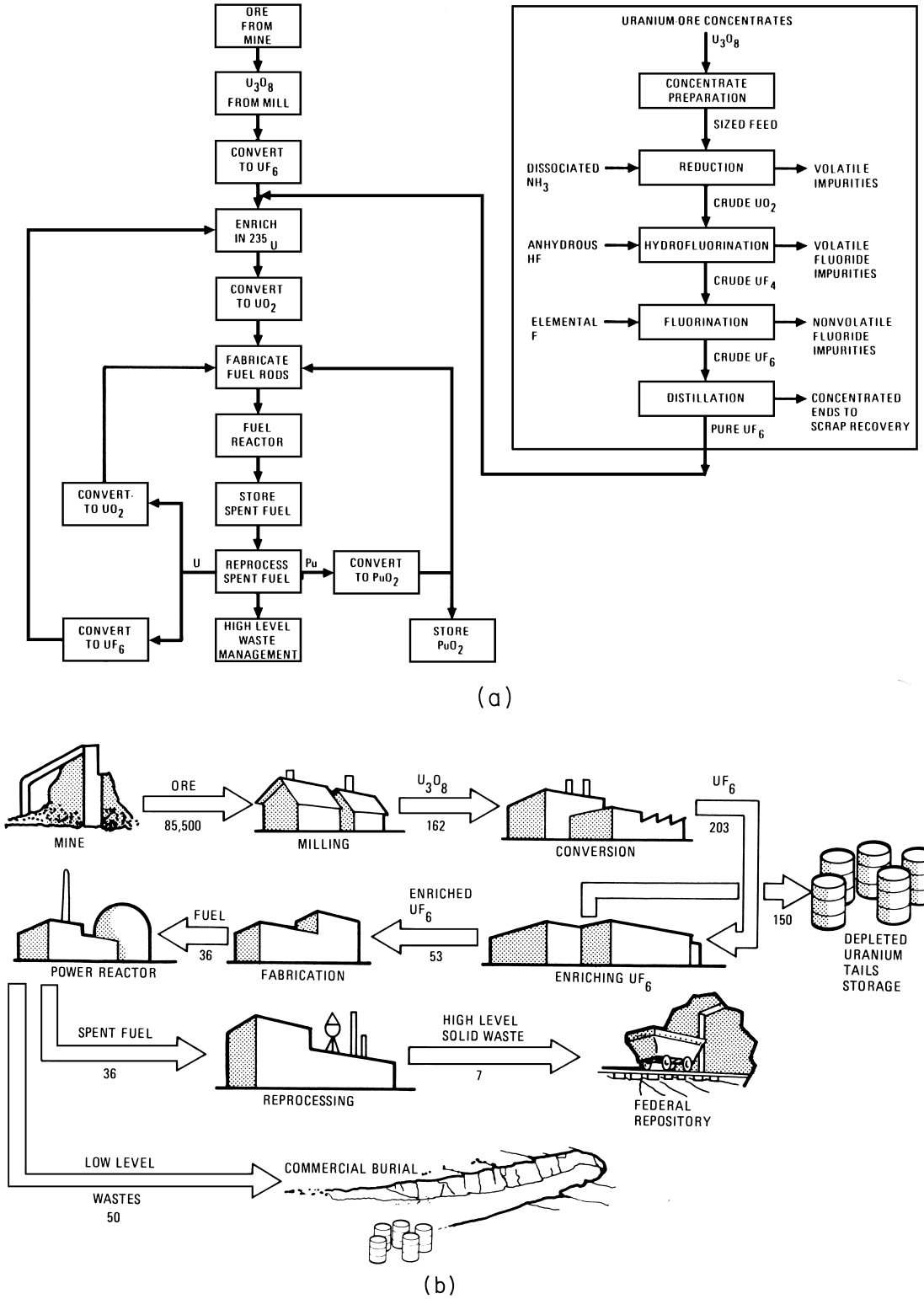

FIGURE 2 (a) Overall refining process flow diagram with outline of complete uranium fuel cycle. (b) Annual quantities (tons) of fuel materials required for operation of 1000-MW(e) light water reactor. The depleted uranium storage is not required for the reactor, but these tails must be stored safely and have value for future breeder reactor blanket. [From M. T. Simnad and J. P. Howe (1979). *In* "Materials Science in Energy Technology" (G. G. Libowitz and M. S. Whittingham, eds.), Academic Press, New York.]

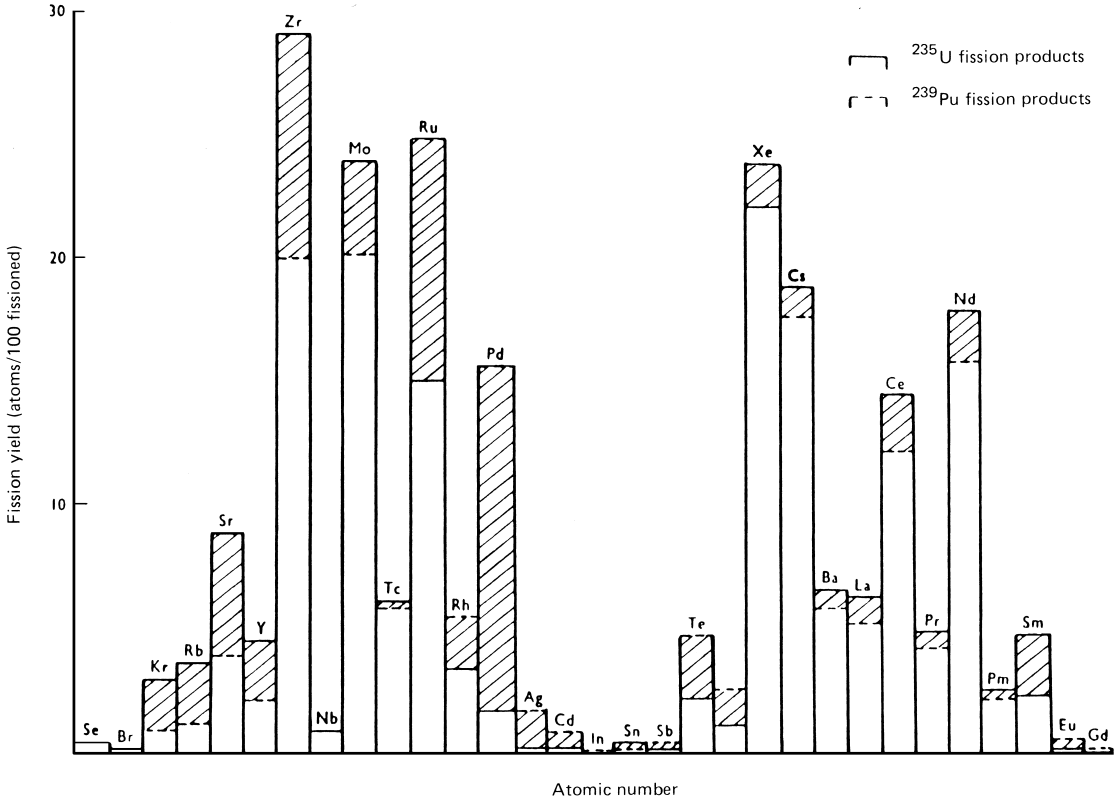

FIGURE 3 Yield of major fission products for fast fission of ^{235}U and ^{238}Pu. [From M. T. Simnad and J. P. Howe (1979). *In* "Materials Science in Energy Technology" (G. G. Libowitz and M. S. Whittingham, eds.), Academic Press, New York.]

salt) by reaction with HF gas and then to UF_6 with fluorine gas. The dry fluoride process involves fluid-bed reduction, hydrofluorination, and fluorination of UO_2. The UF_6 is then double-distilled to produce the pure product. The enriched UF_6 is reacted with aqueous ammonia to yield ammonium diuranate (ADU), which is heated in an atmosphere of steam and hydrogen to yield UO_2.

TABLE IVa Chemical State of Solid Fission Products in Irradiated UO_2

Fission product	Predicted chemical state	Remarks
Cs	Metallic	Volatile and insoluble in UO_2
I	Metallic	
Te	Metallic	
Mo	Metallic	Involatile and insoluble in UO_2
Tc	Metallic	
Ru	Metallic	
Rh	Metallic	
Ba	As oxides (BaO, SrO) and possibly zirconates ($BaZrO_3$, $SrZrO_3$)	Insoluble in UO_2
Sr		
Zr	As oxides; some of Zr may exist as $BaZrO_3$ and $SrZrO_3$	Soluble in UO_2
Ce		
Nd		

The enrichment process involves the diffusion of UF_6 vapor through a series of porous membrane barriers. Since the maximum theoretical separation per stage is governed by the ratio of the masses of gas molecules in the UF_6, namely, 1.00429, a large number of stages extending several miles are required. For example, to attain an enrichment of 4% ^{235}U, a cascade of 1500 stages is required. At each stage, the gas that diffuses from the tube through the barrier is fed to the next higher stage, and the remaining portion, about 50%, is recycled to the lower stage.

The separative work in enrichment entails about one third of an average fuel-cycle cost. The separative work unit is a measure of the work required to carry out the separation of feed into tails. For example, the production of 1 kg of 3% ^{235}U requires 4.306 units of separative work and uses 5.479 kg of uranium feed material (0.71% ^{235}U to yield tails of 4.479 kg having a ^{235}U content of 0.2%). The separative work costs are made up of power cost (49%), capital cost (35%), and operating, research, and development cost (16%). The three U.S. diffusion plants require 6000 MW(e) power capacity and consume 45 billion kWhr of electric power. At full

TABLE IVb Final Fuel Composition (in Atomic Percent) of $(U_{0.85}Pu_{0.15})O_2$ Fuel Element in a Fast-Fission Environment at 10% Burnup

Elements	State	Location	Concentration
Y	Oxide, solid solution	Columnar[a]	0.07
La	Oxide, solid solution	Columnar[a]	0.17
Ce	Oxide, solid solution	Columnar, equiaxed	0.44
Pr	Oxide, solid solution	Columnar[a]	0.16
Nd	Oxide, solid solution	Columnar[a]	0.51
Pm	Oxide, solid solution	—	0.06
Sm	Oxide, solid solution	—	0.11
Eu	Oxide, solid solution	—	0.02
Ba	Oxide, solid solution	Columnar,[a] equiaxed	0.21
Zr	Oxide, solid solution	Columnar[a]	0.68
Sr	Oxide, solid solution	Equiaxed	0.14
Nb	Oxide, solid solution	—	0.02
Mo	Metallic phase	Columnar[b] (inclusions)	0.66
Tc	Metallic phase	Columnar[b] (inclusions)	0.19
Ru	Metallic phase	Columnar[b] (inclusions)	0.69
Rh	Metallic phase	Columnar[b] (inclusions)	0.16
Pd	Metallic phase	Columnar[b] (inclusions)	0.41
Cs	Metallic phase	Columnar[b] (inclusions)	0.60
Rb	Metallic phase	—	0.07
		Total concentration	5.37

[a] Primarily in columnar-grain matrix.
[b] Primarily near columnar-grain boundaries.

capacity these plants have a capacity of 17.2 million SWU per year.

Other enriching techniques include the centrifuge processes and laser separation. Both these methods are under intensive study and appear to have a potential for lower power requirements and capital costs and higher yields.

The characteristics of LWR-grade plutonium generated from three cycles of operation in a large reactor are as follows: the isotopic composition is 1% ^{238}Pu, 58% ^{239}Pu, 23% ^{240}Pu, 13% ^{241}Pu, and 6% ^{242}Pu. The isotopes ^{239}Pu and ^{241}Pu are fissile. The major sources of alpha radiation are ^{239}Pu, ^{240}Pu, and ^{241}Pu. The gamma-emitters are ^{241}Pu and the daughter products of ^{241}Pu (13-yr half-life), namely, ^{241}Am and ^{237}U. Also, neutrons are emitted by spontaneous fission from ^{238}Pu, ^{240}Pu, and ^{242}Pu.

The fission products present in irradiated oxide fuels consist of the following.

1. Volatile elements, which are Rb, Cs, I, Sb, Cd, and the inert gases Xe and Kr.
2. Zr and the rare earths, which form solid solutions with the oxide fuel.
3. SrO and BaO, which are present as occlusions dispersed in the fuel.
4. Noble metals—Mo, Ru, Tc, Pd, Rd, and Ag—which are in the unalloyed state and occur as white occlusions in the equiaxed and columnar grains in the fuel. The Mo may form MoO_2 or MoO_3 in a region of high oxygen potential.
5. Noble metal alloys. The nominal composition of the alloy generally located in the central voids in the fuel is 20% Mo, 17% Tc, 48% Ru, 13% Rh, and 2% Pd.

B. Reprocessing of Nuclear Fuel

The reprocessing of LWR fuel assemblies would reduce the uranium needs and enrichment requirements by approximately 35%. The recycling of the plutonium for LWRs has been studied extensively and can now be used commercially. However, the institutional barriers to reprocessing in the United States have, in effect, eliminated this option for the time being in this country. Several other nations are proceeding to use reprocessed fuels in their LWRs. It should be pointed out that a typical core in a LWR derives about 50% of its power from the fissioning of bred-in plutonium isotopes near the end of an equilibrium cycle. The performance of the mixed-oxide recycle fuels (containing 3–6 wt. % PuO_2) has been very impressive and generally superior to that of the uranium dioxide fuel. Other conservation measures include extended burnup of fuel and optimization of plant availability or capacity factor.

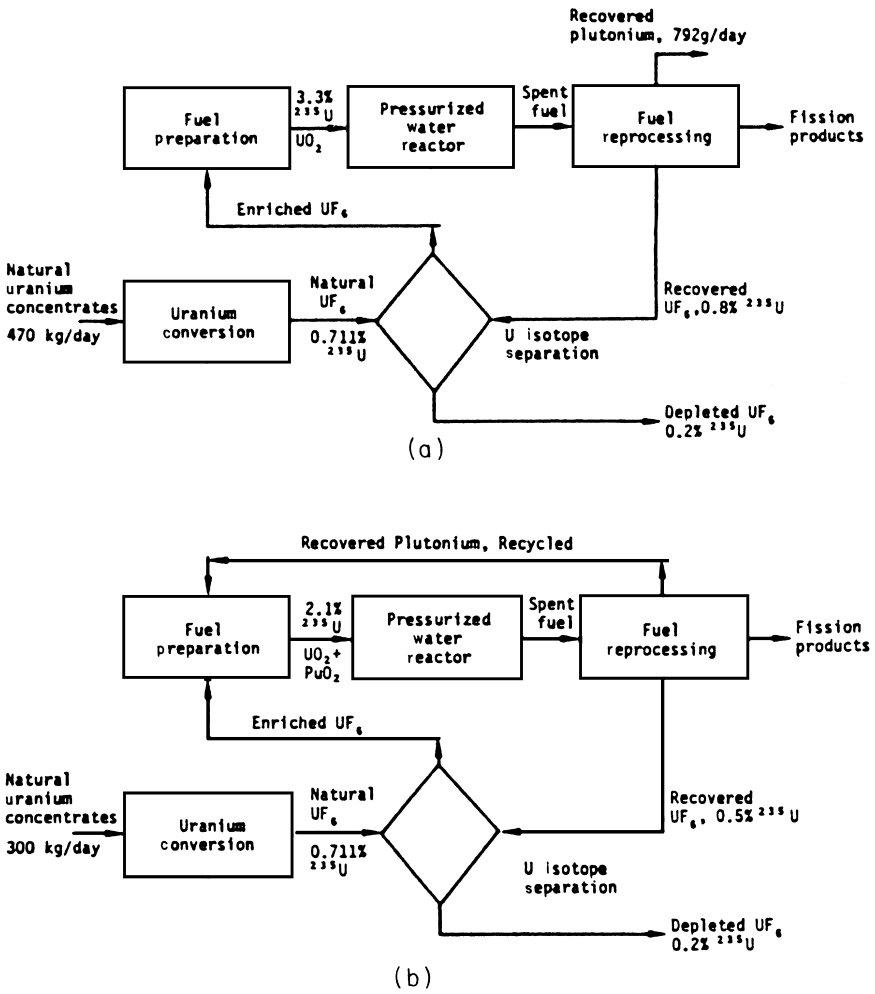

FIGURE 4 Fuel processing flow sheets for 1000-MW(e) PWR: (a) without plutonium recycle and (b) with plutonium recycle. [From M. T. Simnad and J. P. Howe (1979). *In* "Materials Science in Energy Technology" (G. G. Libowitz and M. S. Whittingham, eds.), Academic Press, New York.]

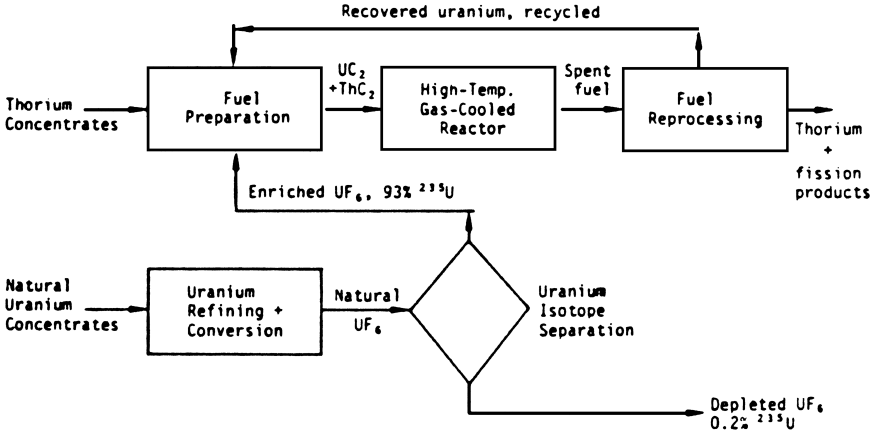

FIGURE 5 Fuel processing flow sheet for HTGR. [From M. T. Simnad and J. P. Howe (1979). *In* "Materials Science in Energy Technology" (G. G. Libowitz and M. S. Whittingham, eds.), Academic Press, New York.]

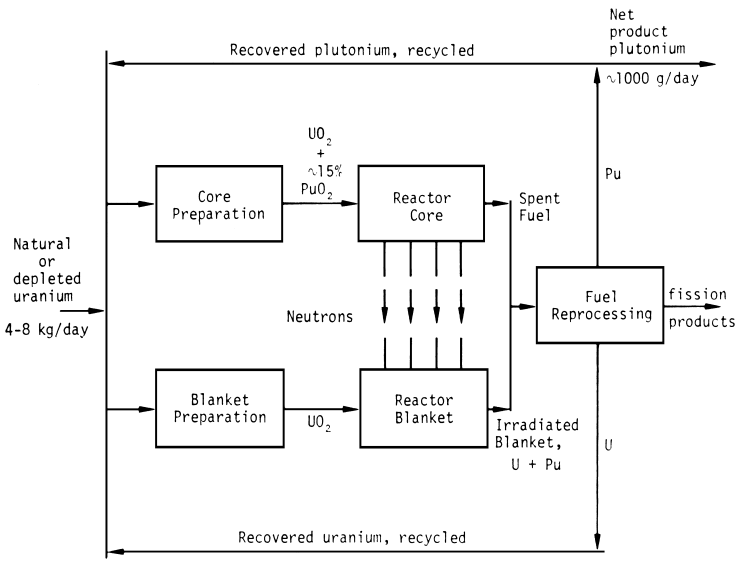

FIGURE 6 Fuel processing flow sheet for 1000 MW(e) fast breeder reactor. [From M. T. Simnad and J. P. Howe (1979). *In* "Materials Science in Energy Technology" (G. G. Libowitz and M. S. Whittingham, eds.), Academic Press, New York.]

The reprocessing of spent fuel serves to reduce fuel-cycle costs. The basic process used for LWR fuels is the solvent extraction process. The fuel pins are first disassembled (about 4 months after removal from the reactor core) in a chop-leach step to remove the fuel from the clad. The fuel is dissolved in nitric acid and the solution is then subjected to solvent extraction (PUREX process) to strip first the Pu and then the U from the solvent. After purification cycles by means of subsequent solvent extractions [tributyl phosphate (TBP) in kerosene], the Pu is recovered as the nitrate in aqueous solution and the U as UO_2 or nitrate in dilute nitric acid solution. The fission products in the waste solutions are stored for several years in cooled tanks to remove much of the decay heat and are then solidified. About 100–300 gal of fission product waste solutions are generated per ton of U fuel.

TABLE V Burnup Conversion Factors

Material	Fissions/cm^3	Percent burnup of heavy atoms	MWd/kg	
Uranium	10^{20}	0.209	1.810	
	4.78×10^{20}	1.0	8.650	
			U	UO_2
UO_2	10^{20}	0.411	3.560	3.130
	2.43×10^{20}	1.0	8.650	7.630
			U	UC
UC	10^{20}	0.305	2.640	2.500
	3.28×10^{20}	1.0	8.650	8.220

The four main solid fission product isotopes from spent reactor fuel are Sr, Cs, Ce, and Pm. It has also been proposed that the elements Ru, Rh, Pd, Xe, Kr, and tritium may be produced economically as by-product isotopes from fission products. Fission product yields are shown in Fig. 3. Their chemical states are listed in Table III.

A 1000-MW(e) LWR generates approximately 200 kg of Pu annually. The fabrication of recycled Pu poses problems of shielding arising from gamma radiation from ^{241}Pu and the decay daughters ^{237}U and ^{241}Am, as well as neutrons from the spontaneous fission of ^{238}Pu, ^{240}Pu, and ^{242}Pu. A plant with 1700 tons capacity will provide the needs of 39 LWR power plants.

C. Transportation, Safeguards, and Waste Disposal

The spent fuel from LWRs contains approximately 50% of fissile material that can be used for the reload batch. The fission product activity from a 3000-MW(t) core after 1-yr decay is approximately 3×10^8 Ci. Decay heat of the discharged fuel is lowered by storing at the reactor site for a period of 3–4 months before shipment. The amount of fission product activity shortly after shutdown is about 10 Ci per thermal watt of power. The shipping cask for LWR spent fuel consists of an annular stainless steel shell with depleted uranium or lead in between for shielding. The decay heat is removed by means of cooling fins. The spontaneous fast neutrons from the ^{242}Cm and ^{244}Cm are shielded with a neutron moderator several centimeters thick. The cask may weigh up to 100 tons, but

highway transportation is limited to under 20 tons (about 0.5 tons U fuel capacity). Hence, railroad transportation is required.

The safeguards on the fuel cycle are based on four methods: (1) accounting for the materials balance on a continuing basis by means of a computer program, NMIS (Nuclear Materials Information System), (2) surveillance, (3) nondestructive assay by remote detection systems (e.g., detecting the gamma radiation from ^{239}Pu), and (4) physical protection.

The assessment of the safety of nuclear reactors has been based on design basis accident (DBA) considerations. This approach identifies the events that can lead to the release of radioactivity and do harm to people and property. The reactor designs incorporate safeguards against the worst physically possible chain of events. It has been estimated that almost half the effort in the design and operation of nuclear reactors is related to safety features.

The principal fission products and other radionuclides in the reactor effluents for waste disposal are ^{3}H, ^{58}Co, ^{60}Kr, ^{85}Kr, ^{89}Sr, ^{131}I, ^{133}Xe, ^{134}Cs, ^{137}Cs, and ^{140}Ba. With 1000-GW installed capacity [about one thousand 1000-MW(e) plants], approximately 19,000 tons of spent fuel would be reprocessed per year. The volume of liquid waste would be 5.8 million gal/yr.

IV. PREPARATION AND PROPERTIES OF NUCLEAR FUELS

The processing of nuclear fuels requires the provision of strict accountability, safeguards, and criticality control. The fissionable isotopes are accountable to within 0.1 g. Also, personnel have to be protected from the toxicity and radioactivity of the fuel materials. Special gloveboxes and hot cells are utilized, with appropriate protective shielding and filters and fire prevention measures. Quality control and quality assurance must be exercised in all the stages of production.

Nuclear fuels are classified as metallic, ceramic, and dispersions. The metallic fuels are generally alloyed to improve their resistance to irradiation and corrosion. Ceramic fuels include the oxides, carbides, and nitrides. Dispersion fuels include two-phase metallic fuels and dispersions of ceramic fuels in metal or cermic or graphite matrices.

A. Metallic Fuels

Uranium alloys have been used in the fuel elements in the carbon-dioxide cooled, first-generation nuclear power reactors in Britain (Calder Hall or Magnox reactors) and France and in fast breeder reactor prototypes (Dounreay, EBR-I and -II, and Fermi).

Metallic uranium is produced by the reduction of uranium tetrafluoride by magnesium or calcium in a pressure vessel. Uranium fuel rods are produced by casting, rolling, extrusion, machining, and heat treating. Uranium undergoes three phase changes up to its melting point, namely, the alpha (orthorhombic) up to 666°C, beta (tetragonal) from 666 to 771°C, and the gamma (body centered cubic) from 771 to 1130°C (melting point). Anisotropic alpha-uranium is subject to dimensional changes under both thermal cycling and nuclear irradiation. The changes are governed by the structure and composition as well as temperature and burnup.

Metallic uranium fuels are generally limited to operation below approximately 600°C maximum temperature and to relatively low burnups of about 5 MWd/kg U because of irradiation damage. Swelling and growth become excessive primarily because of fission gas bubbles at high temperatures and the formation of lattice defects (vacancies, interstitials, dislocation loops, etc.) as low temperature. Irradiation creep is also a problem at low temperatures. There is little swelling below about 400°C. The growth reaches a maximum in the range 400–600°C. Above approximately 700°C, fission gas swelling predominates. The Magnox reactors used uranium adjusted with iron (260 ppm), aluminum (650 ppm), carbon (800 ppm), silicon (20 ppm), and nickel (50 ppm). The French EDF reactors used U–1% Mo in EDF-1, -2, -3, and -4 and Sicral alloy [uranium containing Al (700 ppm), Fe (300 ppm), Si (120 ppm), and Cr (80 ppm)] in EDF-5. These minor alloying elements result in grain-size refinement and very finely divided precipitates and the swelling diminishes by several orders of magnitude. These additions modify the α–β transformation and favor grain refinement and absence of preferred orientation upon quenching these alloys from temperatures in the beta range. Thus, heat treatment minimizes distortion of fuel elements due to either thermal cycling or irradiation growth, since induced intergranular stresses and strains are reduced, a typical grain size effect. These fuels were clad with magnesium alloys (Mg containing 0.8% Al, 0.002–0.05% Be, 0.008% Ca, and 0.006% Fe in the U.K., and Mg containing 0.6% Zr in France).

Metallic fuels for breeder reactors have been developed and studied at Argonne National Laboratory. An alloy of U–15% Zr–10% Pu has a solidus temperature of 1155°C. This fuel is satisfactory after irradiation to 16 at. % burnup when adequate void space is provided between the fuel and cladding to accommodate 25–30% swelling and a plenum for fission gases. The fuel is sodium-bonded to the cladding and has a smear density of 75%. It attained a power rating of 15 kW/ft and expanded to touch, but not strain, the cladding. The swelling rate was 2–$\frac{1}{2}$% per at. % burnup (the solid fission products accounted for 10%

of the dilation and the fission gas bubble swelling for 22–66%; 60–70% of the fission gases were released via cracks and fissures.) There was a marked effect of external pressure on swelling. For example, the swelling per 1 at. % burnup was 50% at 1 atm and 10% at 67 atm. The cast alloy U-5 wt, % fissium (2.5% Mo, 2% Ru, remainder Si, Rh, Pd, Zr, and Nb) has been tested as a fuel in EBR-II. Swelling becomes marked above 500°C, and it can be exposed to a burnup of 1.2%. This fuel, when made into rods by centrifugal casting, developed a texture that resulted in excessive swelling. Over 4% burnup was achieved without rupture of the stainless steel cladding.

B. Oxide Fuels

The dioxides of Th, U, and Pu have the face-centered cubic fluorite structure. They are completely miscible in solid solution. Uranium dioxide can take up oxygen interstitially to form hyperstoichiometric UO_{2+x}, where x may be as high as 0.25 at high temperatures. As the temperature is lowered, a phase having the composition U_4O_9 precipitates. Hypostoichiometric oxides of uranium UO_{2-x} form under conditions of low oxygen partial pressure at high temperatures and revert to stoichiometric UO_2 precipitating U on cooling. Unsintered, finely divided UO_2 powders oxidize to U_3O_8 at room temperature when exposed to air. The dioxides of Pu and Th form only the stoichiometric dioxides because of the stability of the Th^{4+} and Pu^{4+}. In UO_2–PuO_2 solutions, Pu^{4+} may be reduced to Pu^{3+}.

1. Uranium Dioxide

Uranium dioxide is the most widely used fuel material in nuclear power reactors, usually in the form of cylindrical, cold-pressed, and sintered pellets with densities in the range of 92–97% of the theoretical. The properties that combine to make UO_2 such a unique fuel material are (1) high melting point (2800°C), (2) chemical stability in water cooled reactors, (3) compatibility with cladding (Zircaloy and stainless steel), (4) excellent irradiation stability, and (5) ease of fabrication.

Deviations of composition from stoichiometry have a profound influence on the properties of UO_2, diminishing the already low thermal conductivity, lowering the melting point and strength, increasing creep and fission product migration and release, and altering the complex irradiation behavior. The increase in oxygen activity with burnup can be very significant in leading rods in LWRs (5% burnup) and in fast breeder reactor fuels (over 10% burnup).

The allowable values of the thermal conductivity integral and the temperatures within pellets have been estimated from observation of microstructure; for example, the melting point boundary corresponds to 2865°C, columnar grain growth to 1700°C, and equiaxed growth to 1500°C. The reported integral conductivity values from 500°C to melting range from 63 to 73 W/cm. The thermal conductivity of UO_2 decreases as the O/U ratio is increased.

The melting point of stoichiometric UO_2 is 2865 ± 15°C. It drops to 2425°C at on O/U ratio of 1.68 and to 2500°C at an O/U ratio of 2.25. The lowering of the melting point to 2620°C at a burnup of 1.5×10^{21} fissions/cm^3 has been reported.

Particularly striking among the behavioral features of UO_2 is the large increase, as the O/metal exceeds 2, in the rate of creep, sintering, diffusion, and other processes depending on mobile defects. Creep data on UO_2 demonstrate this effect.

The uranium oxide (yellow cake) obtained from the milling operation must be purified before it can be used in nuclear fuels. The characteristics of the UO_2 powder are largely determined by its method of preparation. The purification is accomplished by solvent extraction or by the hydrofluor process. In the solvent extraction method, the uranium oxide concentrate is dissolved in nitric acid, and the resulting solution is passed down through an extraction column through which 30% *n*-tributyl phosphate in kerosene or in hexane flows upward; that is, the solvent is the continuous phase, and the ratio of organic to aqueous is about 13:1. The uranyl nitrate is extracted into the organic solvent and is further purified by scrubbing with dilute nitric acid or water. The solution is then fed into a stripping column where the uranium is extracted into dilute (0.01 *N*) nitric acid solution. The stripped solvent is purified and recycled. The aqueous uranium nitrate solution is evaporated to dryness, and the resulting uranium nitrate is calcined at approximately 350–450°C to UO_3 (orange oxide). The UO_3 is reduced to UO_2 by hydrogen at about 600°C. Alternately, the nitrate solution may be reacted with ammonia to precipitate ammonium diuranate, which is filtered, dried, calcined, and reduced by hydrogen to UO_2. The UO_2 is converted to UF_4 (green salt) by reaction with HF gas. The UF_4 is a solid with a melting point of 960°C. It is shipped to uranium enrichment plants where it is reacted with fluorine gas. The reaction is highly exothermic, and the reactor towers are cooled during operation to a temperature between 450 and 550°C to form the volatile compound uranium hexafluoride, UF_6. The latter is used as the feed material in gaseous diffusion plants for the enrichment of the uranium. Sublimation of UF_6 takes place above 56°C.

In the dry hydrofluor process, the U_3O_8 concentrate (yellow cake) is ground and sized into feed material for a fluidized-bed unit, where it is reduced by hydrogen to UO_2 at 540–650°C. The UO_2 particles are then reacted in two successive fluidized-bed reactors with anhydrous HF at 480–540°C and 540–650°C, respectively, to produce UF_4

(green salt). The fluorination is carried out with excess fluorine, with an inert solid diluent, CaF_2, which serves to prevent caking and to distribute the heat of reaction. Next, the UF_4 is reacted with fluorine gas at 340–480°C to produce UF_6, which is collected in cold traps (−15°C). Further purification (>99.97%) is accomplished by fractional distillation of the UF_6 at a pressure of 0.35 to 0.7 MPa (50 to 100 psig).

Pure uranium dioxide is produced from UF_6 by hydrolysis of the UF_6 with water and precipitation of ammonium diuranate or ammonium uranyl carbonate by addition of ammonia or ammonium carbonate, respectively. The precipitate is filtered, dried at 175°C, and calcined and reduced at 800°C in hydrogen to UO_2. The characteristics of the powder influence the processing and properties of the finished fuel pellets as well as their performance. The UO_2 is cooled under nitrogen and reduced to fine powder in wet, rubber-lined ball mills or by micronizing. The milling operation may be eliminated with ceramically active powder. It is important to add the correct amount of ammonia in the precipitation step to produce a sinterable product. Too much ammonia yields a gelatinous ammonium diuranate (ADU), which is difficult to filter, whereas with too little ammonia, the UO_2 product is difficult to press and sinter. Sinterable UO_2 is prepared by the rapid precipitation of ADU under conditions of low uranium solubility. The excess ammonia is programmed to adjust for the solubilizing and complexing action of the fluoride concentration, which increases as UF_6 is fed into the system. Conditions of relatively low uranium solubility are desirable in order to maximize yields. For example, a concentration of 25 g/liter of fluoride may require an excess ammonia concentration of 5–15 g/liter to precipitate the ADU in a form that yields ceramically active UO_2 powder. The occluded fluoride impurity in the precipitated UO_2 is removed by passing steam over the ADU during calcining and reduction at 800°C. Hydrogen reduction is continued after the steam treatment is stopped.

Upon exposure to air, the UO_2 powder partially oxidizes to $UO_{2.03}$ to $UO_{2.07}$, and in extreme cases the powder may be pyrophoric and burn to U_3O_8. The highest oxygen forms (UO_3 and U_3O_8) are generally formed between 500 and 600°C. At higher temperatures, oxygen is released, and above 1100°C, UO_2 is again the stable form.

The fuel for water-cooled power reactors is enriched to contain 2–4% ^{235}U. Higher enrichments up to 93% ^{235}U are used in fuels for fast breeder reactors, HTGRs, and certain research and test reactors.

The commercial method for producing UO_2 fuel elements is to cold press and sinter cylindrical pellets of ceramic-grade UO_2, which are loaded into tubular metal cladding (Zircaloy or stainless steel). The cladding is sealed by welded end-plugs to form a fuel rod or fuel pin,

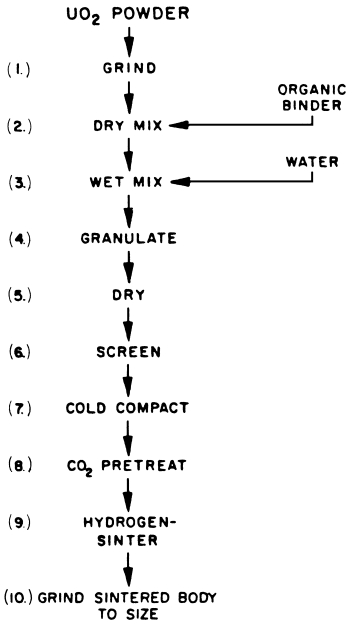

FIGURE 7 Process flow diagram of principal operations for fabrication of UO_2 fuel components. [From M. T. Simnad and J. P. Howe (1979). *In* "Materials Science in Energy Technology" (G. G. Libowitz and M. S. Whittingham, eds.), Academic Press, New York.]

and an assembly of the fuel rods into bundles constitutes a fuel element or fuel subassembly.

The main steps in the production of UO_2 pellets consist of mixing the UO_2 powder with binder and lubricant materials, granulation to form free-flowing particles, compaction in an automatic press, heating to remove the fugitive binder and lubricant, sintering in a controlled atmosphere, and grinding to final specified dimensions (Fig. 7). A large water-cooled reactor core contains several million fuel pellets.

The granulated mixtures are compacted in automatic pellet presses that are double-acting cam-operated. The ends of the green pellets are dished by means of punches with slightly convex faces. The dished configuration provides space for thermal expansion of the pellet centerline during operating conditions. Chamfering of the pellet edges also improves performance. The length-to-diameter ratio of the compacts made in double-acting presses is usually limited to a maximum of 2:1 to minimize differences in density that would result in cracking due to differential shrinkage during sintering. The two-piece dies used to compact the highly abrasive fuel granules consist of a hard liner (tungsten carbide) and a soft steel shrink ring to reduce elastic die expansion. The punches are made of tungsten carbide.

A slight taper is introduced in the exit side of the die to prevent laminations in the compacts, by allowing a gradual elastic expansion during ejection from the die. For typical

pellets of 1.0-cm diameter, the diametral clearance between die and punches is approximately 15–35 μm. The binders and lubricants are removed from the green compacts by heating in a high flow of CO_2 for several hours at 500–800°C, which also reduces the carbon content to below 50 ppm. The pellets are then sintered in a hydrogen atmosphere at 1550–1700°C. The sintered pellets may have densities ranging from 90 to 97% of theoretical density, depending upon the nature of the UO_2 powder, the green compact density, and the sintering time, temperature, and atmosphere. Centerless belt grinding with silicon carbide abrasive is used to attain the specified dimensional tolerances in the sintered pellets.

Recent developments in the processing of UO_2 pellets to improve the quality and lower the fabrication costs, include the double-cycle inverse (DCI) process used in France in which no additives are made to the UO_2 powder except for a small amount of lubricant (0.2% zinc stearate). In this process the UO_2 powder is produced from UF_6 by pyrohydrolysis at 250°C:

$$UF_6 + 2H_2O \rightarrow UO_2F_2 + 4HF,$$

followed by hydrogen reduction at 700°C,

$$UO_2F_2 + H_2 \rightarrow UO_2 + 2HF.$$

The UO_2 powder obtained by this process is readily granulated and sintered, without the addition of binders, to controlled densities. KWU (Germany) controls pore size distribution by addition of U_3O_8 to the UO_2 powder. The pellets have high stability (no further densification takes place during operation). The pellet density in the French (DCI) process is controlled by the cold compaction pressure in forming the green compacts. In Germany (KWU), the ammonium uranyl carbonate (AUC) process is used to produce UO_2 powder that is free-flowing as calcined and does not require any pretreatment such as granulation before cold compaction.

The quality assurance activities in fuel fabrication are quite costly (as much as 30% of fuel fabrication costs), but this cost is more than compensated by the considerable improvements in fuel performance experienced when good inspection practices have been implemented. One of the most important quality requirements for fuel pellets is the need to minimize the moisture and fluorine contents (to $<$10 ppm each) to prevent internal corrosion failure of the cladding. The pellets should be stored in a dry environment and preferably heated in vacuum after loading into the cladding. A major fuel rod failure mechanism is mechanical interaction between the fuel pellets and the cladding in the presence of fission products (e.g., iodine, cesium, and tellurium), which results in stress corrosion or intergranular cracking of the cladding.

The serious problem of UO_2 pellet densification under irradiation was experienced in pressurized water reactors in the early 1970s. This behavior causes the fuel materials to contract and leads to loss of integrity of the fuel rods by collapse of the cladding in axial gaps in sections of the fuel columns. The solution to fuel densification has been to control the manufacturing process so as to produce fuel pellets with higher density and stabilized pore structures (pore size and grain size). Prepressurizing the fuel rod with helium also avoids clad flattening.

In recent years there have been extensive studies to develop an alternate fuel fabrication technique in which crushed or spherical fuel particles are vibratory-packed directly into the cladding tubes, thereby avoiding the problems of pellet production. In this process the fuel fabrication operations can be carried out more economically and automatically by remote operation at room temperature. The gap between the fuel and cladding is eliminated, thereby relaxing the tolerance on the clad tube diametral dimensions. The results of irradiation tests of these fuel rods indicate improved performance over pellet fueled rods for equivalent exposures.

Spherical fuel particles produced by the wet chemical sol–gel process have been used in HTGRs and in test elements in water-cooled reactors and liquid-metal-cooled fast breeder reactors. The process consists of producing an aqueous solution or a hydrosol of the salts of the fissile and/or fertile materials, which is dispersed through spray nozzles into spherical droplets. Highly homogeneous mixed oxides are prepared by coprecipitation. The droplets are gelled by either an internal precipitation or dehydration reaction, washed and aged, and then heat treated to dry and sinter to produce high-density spherical particles (Fig. 8). The process is highly compatible with the shielded, remote-fabrication facilities required for irradiated recycle fuel and especially for the production of (U, Pu) oxides and carbides for fast reactors.

The packing efficiency of sphere-pac fuel is governed by the size ratios of the particles. It has been found that the cladding diameter should be at least ten times larger than the diameter of the coarse-sphere particles. Also, the size ratio among coarse, medium, and fine particles should be at least 77:7:1. A smear density of 90% of theoretical density has been achieved with a three-size mix containing 67% coarse, 23% medium, and 10% fine spheres, with diameter ratios of 77:7:1. The production methods for medium and fine spheres (50–550 μm) are well established. However, particles larger than about 500 μm in diameter are difficult to fabricate. For the production of high-density fuel, a hybrid technique that combines the sphere-pac and pelletizing methods has been studied. In this approach the spherical sol–gel particles are first converted to U_3O_8 at 600–800°C and then cold pressed and

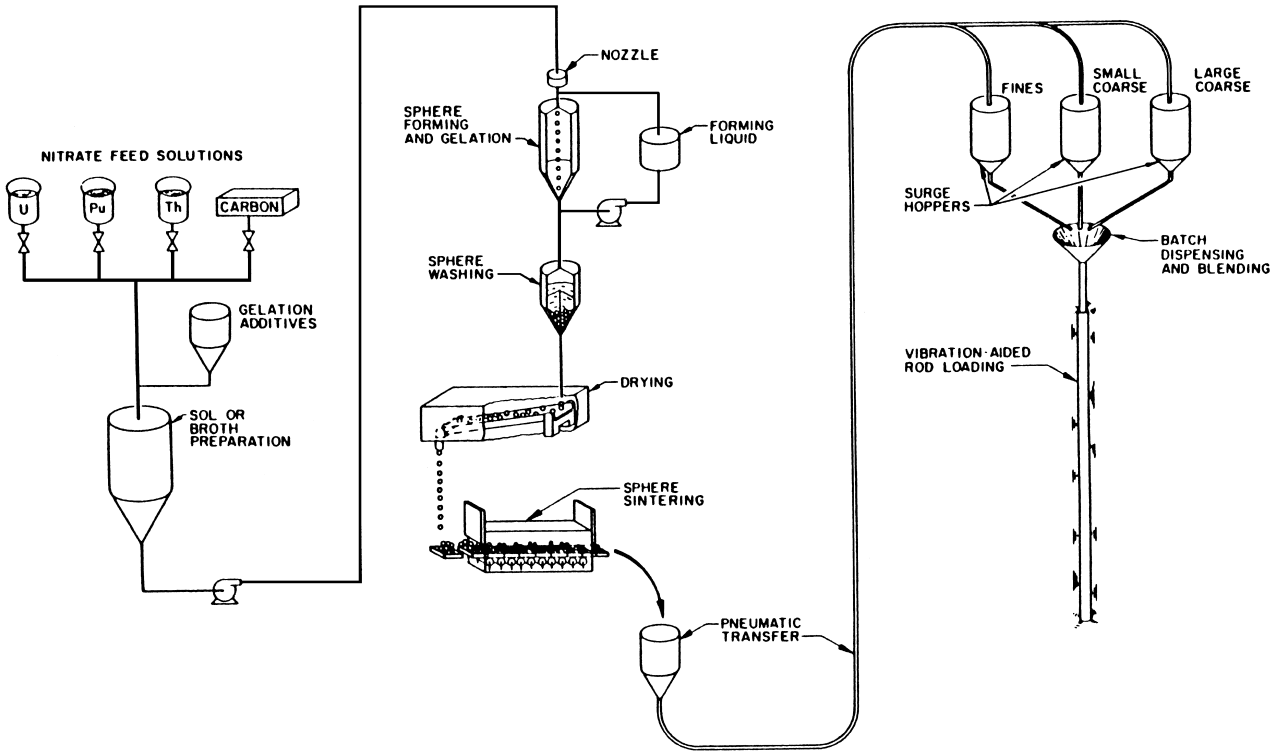

FIGURE 8 Major steps in the gel-sphere-pac process. [Courtesy of Oak Ridge National Laboratory.]

sintered in hydrogen at high temperature (1500–1700°C) to form pellets.

Most useful fuel elements are cylindrical, as are reactor cores, and for similar reasons. The exception is the spherical element for the experimental AVR helium gas-cooled reactor at Jülich, Germany. The overall active length of an element derives from the neutronic calculations that determine the size and fuel loading of the reactor. The diameter and number of the cylinders, usually called rods or pins, must satisfy two requirements: (1) the total volume of the pins must contain the required mass of fuel and fertile material and (2) the surface area multiplied by the local permissible heat flux and integrated over the reactor core must equal the required power. A third requirement trades minimizing fabrication costs against maximizing specific power and forces the diameter into the upper range permitted by the first two requirements. Cladding thickness, strength, and neutron absorption enter into these three requirements and are vital in a fourth, namely, fuel burnup and life. Prediction of fuel performance, life, probability, and mode of failure is the essence of nuclear fission fuel engineering. Implied in life and performance are stability of dimensions, tolerable corrosion, and confinement and management of fission products. For structural and handling purposes, fuel rods are grouped, spaced, and supported in conveniently sized bundles, or subassemblies.

The costs of fuel can be reduced primarily by higher burnups, lower fabrication costs, and an increase in the maximum specific power output of the fuel rods. Fuel assembly prices have not risen because fabrication costs have dropped and thus balanced the rising labor and materials costs. The specific fuel costs have actually decreased with the higher burnups.

A large [1000-MW(e)] LWR reactor core contains approximately 40,000 fuel rods arranged to form about 200 fuel assemblies. The fabrication of a fuel rod proceeds as follows (see Fig. 4). The cladding tube is thoroughly cleaned, and the first end-plug is pressed into the tube and welded. The UO_2 pellets are loaded into the cladding tube, the plenum spring is placed on top of the fuel pellets, and the tube is back-filled with pressurized helium. The second end-plug is pressed into the tube and welded. A typical fuel rod and fuel assembly are shown in Figs. 9 and 10. The loaded and sealed fuel rod is then tested and inspected before final assembly, which includes dimensional inspection, helium mass spectrometer testing for leak tightness, radiography of the welds, and testing for surface defects on the cladding. Zircaloy-clad rods are etched in a nitric hydrofluoric acid bath and exposed for 3 days to high-pressure steam in an autoclave [400°C, 9.6 MPa (1400 psi)]. Acceptable rods are covered with a uniform black, lustrous oxide coating.

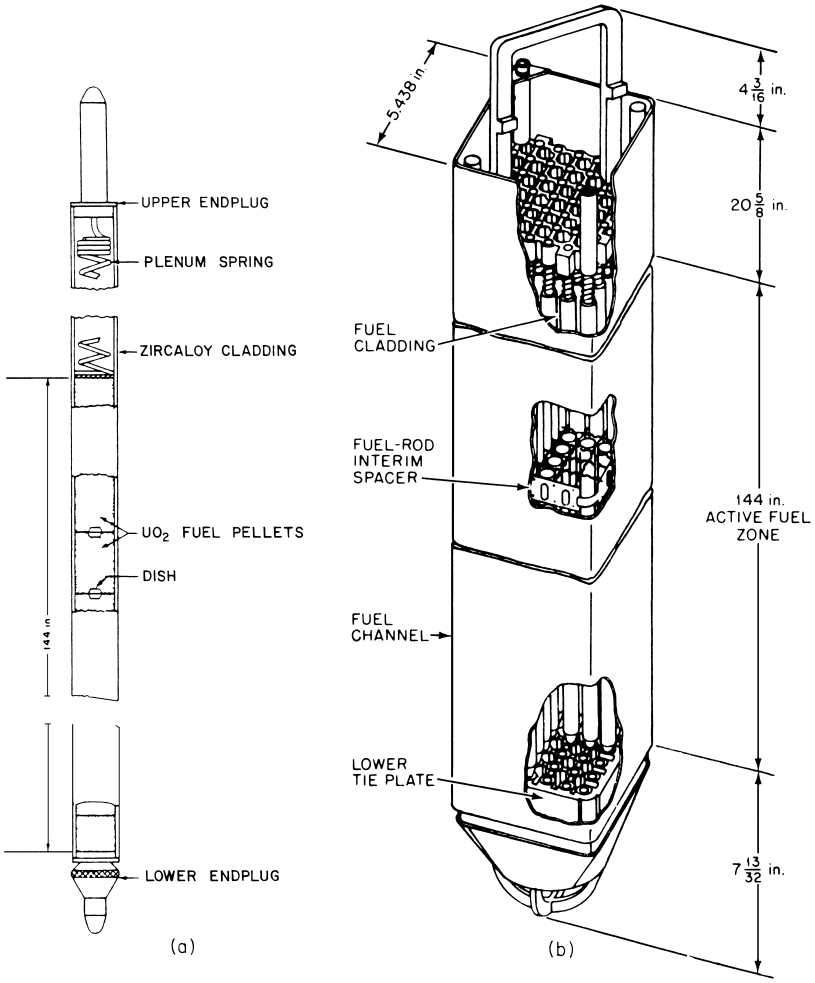

FIGURE 9 (a) Fuel rod schematic for BWR. (b) Fuel assembly schematic for BWR. [From M. T. Simnad and J. P. Howe (1979). *In* "Materials Science in Energy Technology" (G. G. Libowitz and M. S. Whittingham, eds.), Academic Press, New York.]

In the pressurized heavy-water reactors developed in Canada (PHWRCANDU), the main structural materials are zirconium and aluminum alloys. The use of heavy water as a moderator provides good neutron economy and permits a wide range of possible fuel cycles (including Th,^{233}U or U,Pu) and fuel management schemes. The UO_2 fuel elements are positioned in Zircaloy-2 pressure tubes, which pass through an aluminum calandria containing the heavy water moderator (Fig. 11).

The advanced CO_2 gas-cooled reactors in the United Kingdom are graphite moderated and fueled with slightly enriched UO_2 fuel clad in stainless steel. The uranium dioxide fuel is in the form of sintered pellets [10.2 mm (0.40 in.) diameter], which are loaded into stainless steel tubes about 508 mm (20 in.) long with a 0.04-mm (0.015-in.) wall. A cluster of 21 fueled tubes is supported by stainless steel grids within a graphite sleeve to form a fuel element. In each channel several fuel assemblies are joined together by a central tie bar to form a fuel stringer. The stainless steel alloy developed for the cladding has a 20% chromium, 25% nickel composition stabilized with niobium. This alloy is produced by a double vacuum melting technique, is free from sigma-phase formation, and has excellent resistance to oxidation in CO_2 at temperatures as high as 850°C.

2. Plutonium Oxide Fuels

Plutonium is obtained by neutron capture from ^{238}U because only an insignificant amount occurs in nature. Plutonium serves as a fissile fuel in both fast and thermal reactors. The fissile isotopes ^{239}Pu and ^{241}Pu produced from ^{238}U can replace some of the ^{235}U in thermal reactors. However, the most efficient and economical use of plutonium is in fast breeder reactors, where more ^{239}Pu and ^{241}Pu are produced than are fissioned in situ. Plutonium

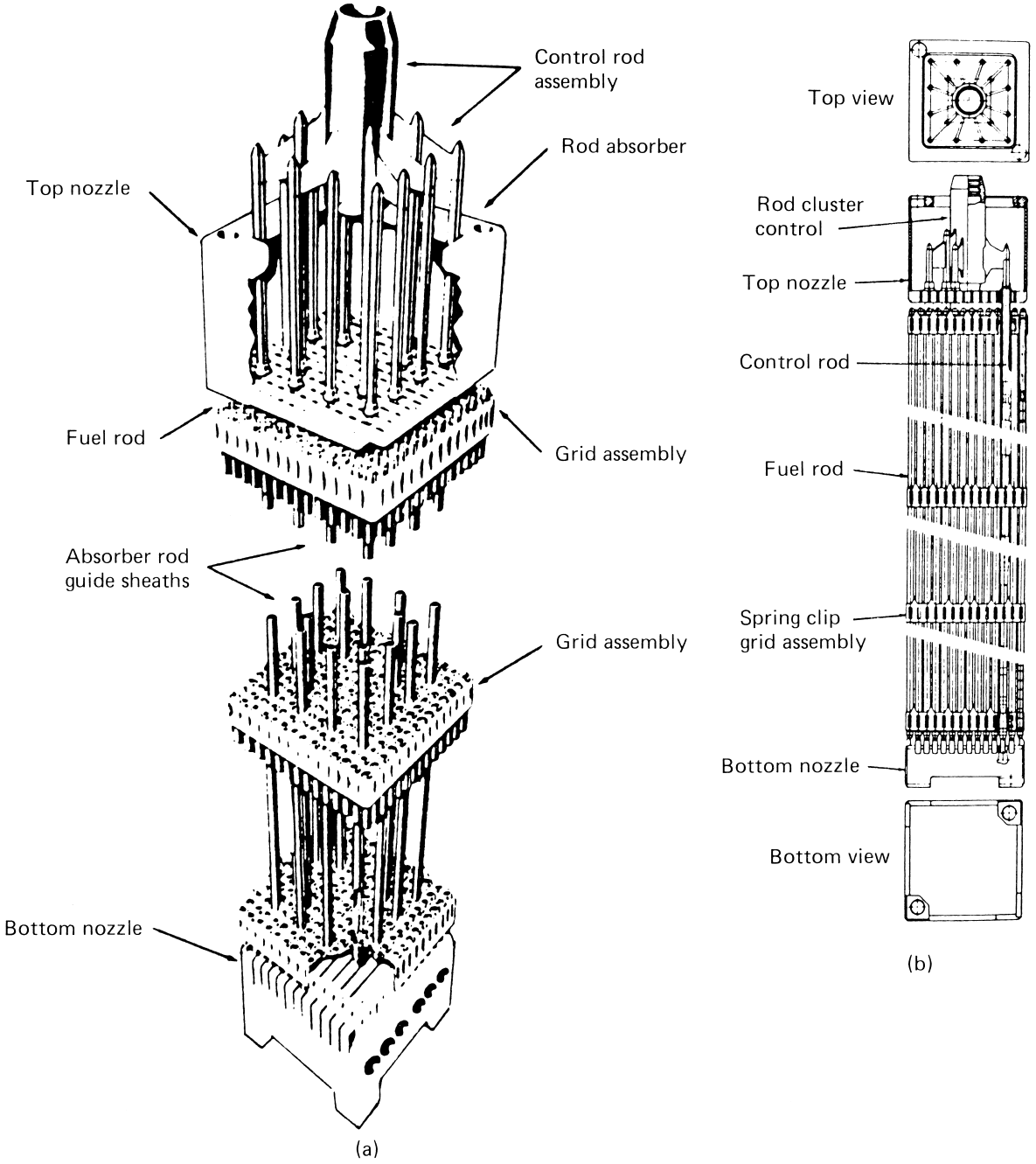

FIGURE 10 (a) Pressurized water reactor rod-cluster control assembly. (b) Fuel assembly schematic for PWR. [From M. T. Simnad and J. P. Howe (1979). *In* "Materials Science in Energy Technology" (G. G. Libowitz and M. S. Whittingham, eds.), Academic Press, New York.]

is derived by chemical reprocessing from irradiated fuel containing ^{238}U. the spent fuel is dissolved in nitric acid, and the plutonium is obtained as a nitrate in the solution. Precipitation of the plutonium is obtained as the hydroxide by adding ammonia, as the peroxide (Pu_2O_7) by addition of hydrogen peroxide, or as the oxalate with oxalic acid. PuO_2 is obtained by heating the hydroxide, peroxide, or oxalate in hydrogen at 500–800°C. The PuO_2 is mixed with UO_2 for use in fast or thermal reactor fuels (15–20% PuO_2 in fast reactor fuel, 3–5% in thermal reactors). The mixed oxide $(U,Pu)O_2$ can be prepared by coprecipitation or by mechanical mixing.

The large-scale production of plutonium-bearing fuels involves special mechanized equipment designs,

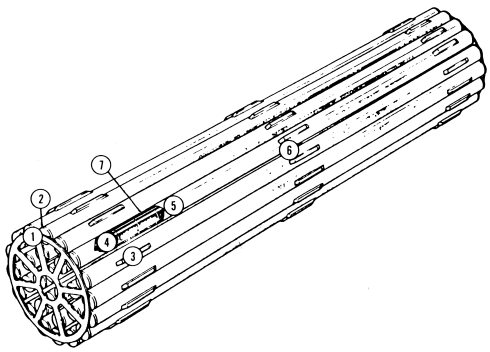

FIGURE 11 Fuel bundle for CANDU reactor: 1, Zircaloy structural end plate; 2, Zircaloy end cap; 3, Zircaloy bearing pads; 4, VO_2 pellets; 5, Zircaloy fuel sheath; 6, Zircaloy spacers; and 7, graphite coating. [From M. T. Simnad and J. P. Howe (1979). *In* "Materials Science in Energy Technology" (G. G. Libowitz and M. S. Whittingham, eds.), Academic Press, New York.]

improved shielding, rapid analyses, and continuous accountability. The major problems in the production of the mixed oxide fuels for fast breeder reactors are as follows.

1. Contamination or radiation exposure of personnel.
2. Criticality incidents and facility contamination.
3. Plutonium inventory and safeguards control.
4. Uniformity of plutonium enrichment.
5. Improved fuel closure methods and nondestructive tests.
6. Fuel assembly techniques.
7. Shipping methods for fuel assemblies and plutonium.
8. Systems for data storage and retrieval.
9. High costs and statistically insignificant information associated with initially low throughputs of plutonium fuel.
10. Lack of statistically significant data from well-characterized materials irradiated under well-known conditions.
11. Reactions between fission products and fuel cladding.
12. Fission product migration.
13. Fuel melting or slumping.
14. Transient performance of fuel and assemblies.
15. Fission gas release.
16. Inadequate knowledge of relationships of oxygen-to-metal ratio, grain size, density, and other properties to irradiation behavior.
17. Inadequate funding for many research and development activities.

Pellets of UO_2–PuO_2 or $(U,Pu)O_2$ are prepared by cold pressing and sintering either a mechanical mixture of the oxides or, preferably, a chemically prepared solid-solution powder, respectively (Table VI). Mechanical mixing should be done by wet ball milling. The important variables that influence the sintering process include the nature of the oxide particles (morphology and size distribution), the ratio of uranium to plutonium oxides, the sintering atmosphere, and the green density. The presence of up to 10% PuO_2 particles reduces the sinterability of UO_2 in a mechanical mixture. Sintering in an atmosphere of CO–CO_2 mixture results in higher density pellets. However, with solid-solution oxide $(U,Pu)O_2$, the sinterability in hydrogen is enhanced with PuO_2 content and is better in hydrogen than in carbon dioxide or argon atmospheres. The optimum temperature for sintering the mixed oxide is 1400°C.

There are several methods for the production of the lower smear density fuel pellets (80–85% of theoretical) that are specified in fast breeder fuel designs to improve the irradiation stability of fuel pins. The composition of the sintering furnace atmosphere has to be carefully adjusted so as to control the oxygen-to-metal ratio in the hypostoichiometric range. The limited contact or remote operation equipment must be highly reliable, and maintenance, which can be time consuming and costly, must be minimum. The sintered pellets (about 5-mm diameter) are centerless ground to meet the required dimensional tolerances of 1%. Proper control of pellet production processes could minimize or even eliminate the grinding operation. The fuel pellets are inspected at the Hanford Engineering Development Lab (HEDL) by means of rapid (5 pellets/sec) test instruments, which perform complete characterization of 100% of the core loading of pellets (3 million in the Fast Test Reactor at the Hanford Engineering Lab).

The operational experience with mixed oxide $(U,Pu)O_2$ fuel in LWRs has been excellent. Fuel assemblies have exceeded 40 MWd/kg average and 70 MWd/kg peak burnups.

3. Thorium Oxide

ThO_2 is miscible with UO_2 over the entire composition range. The low-UO_2 compositions used in the fuels are stable in air at elevated temperature because thoria is stable in oxygen up to its melting point (3300°C). The only stable oxide of thorium is ThO_2, and no higher oxides are formed. It has a cubic fluorite structure and low thermal conductivity. ThO_2 fuel pellets can be fabricated by methods similar to those described for UO_2, and the densities achieved are sensitive to the characteristics of the starting powder material, which can be produced by thermal decomposition of the nitrate, oxalate, hydroxide, or carbonate. Higher densities at lower temperatures can be achieved with oxide powder derived from decomposition of the carbonate. ThO_2–UO_2 mixtures are formed by coprecipitation

TABLE VI Highlights of Typical Mixed-Oxide Fabrication Process (HEDL)

PuO_2	10–20 m^2/gm surface area
Calcining	675°C soak, 60–75 min soak time, 200°C/hr rise, SS crucible
Screening PuO_2	−325 mesh, 6–12 m^2/gm surface area
Screening UO_2	−100 mesh, 8 m^2/gm surface area
Blending	(1) Hand premix through 20-mesh screen 6 times
	(2) V-blend 10 min
Ball milling	Low-ash rubber-lined mills, 12-hr cycle, tungsten carbide media, surface = 4–10 m^2/gm
Binder addition	3 wt. % Carbowax 20 *M* in H_2O (20 wt. % solution)
Drying	3–4 hr at 70°C
Granulation	−20 mesh
Re-drying	3 hr at 70°C
Prepressing	1/2 in. diameter die, 30–50 kpsi
Granulation	−20 mesh
Pellet pressing	20–30 kpsi, 53% theoretical density green density
Binder removal	
Atmosphere	Argon-8% H_2 8 SCFH
Rate of temperature rise and cooling	120–140°C/hr (200°C/hr max)
Soak temperature	350–650°C
Soak time	4 hr
Batch size	3 kg max
Sintering	
Atmosphere	Argon-8% H_2 dried to <1 ppm H_2O 1–6 SCFH
Soak temperature	1650°C
Soak time	4 hr
Batch size	6 kg max
Cycle	23 hr (The furnace is evacuated at 850°C during the cool-down to reduce gas and moisture content of sintered pellets.)
Gauging	Micrometers and dial indicators 0.001 in. accuracy
Grinding	Centerless (dry)
Pellet loading and fuel pin assembly	
Decontamination	
Closure welding	TIG weld, helium atm
Helium leak check	For cladding and weld integrity
Nondestructive testing	Gamma scan for fuel pellet placement and isotopic content
Cleaning and passivating	Caustic base cleaner and HNO, passivating
Surface contamination test	For removable and fixed alpha
Packaging and storage	

of their salts or by mechanical mixing. Granulated mixtures of the oxides containing a binder (Carbowax) and lubricant and up to about 50% U_3O_8 can be cold pressed into pellets and sintered in hydrogen or in air at 1750–1850°C to form the $(Th,U)O_2$ solid solution. The U_3O_8 is prepared by heating UO_2 powder in air at 1000°C. The addition of about 1% CaO promotes the sintering of ThO_2 in air. (Calcium has a low neutron-capture cross section.) Sintered thoria exhibits good corrosion resistance in high-temperature water and in sodium.

The sol–gel process has been successfully used to prepare dense, spherical particles of ThO_2 and $(Th,U)O_2$ for sphere-pac and coated particle fuels. The thoria is dispersed in water from nitrate solutions by slow heating and steam denitration to form a stable sol from which spherical particles are produced. The sol droplets are injected at the top of a tapered glass column containing an upward flow of 2-ethylhexarol (2-EH). The water from the sol particles is slowly extracted by suspension in the 2-EH, and the gelled spheres drop out of the column. Coalescence of the particles is prevented with surfactants in the 2-EH. The sol–gel spheres are dried in steam and argon at 220°C and sintered in hydrogen at 1300°C.

C. Carbide Fuels

There are three compounds in the uranium–carbon system: UC, U_2C_3, and UC_2. The UC has the highest uranium density, has a face-centered cubic (fcc) structure, and is stoichiometric at a 4.8 wt. % carbon composition. At lower carbon contents, free uranium metal is present, generally at grain boundaries and as small particles within the grains. The hyperstoichiometric UC exhibits a Widmanstatten structure of UC_2 platelets in the UC grains. The monocarbides of Th, U, and Pu have the fcc NaCl structure and are completely miscible. ThC and UC are stable to their melting points. The tetragonal CaC_2 structure of UC_2 transforms to a fluorite-type lattice at about 1700°C.

Compared with UO_2, UC has a higher uranium density, has at least five times greater thermal conductivity, and is almost as refractory.

The compatibility of UC with stainless steel depends on the stoichiometry and whether the gap between pellet and cladding is filled with gas or sodium. The cladding acts as a sink for carbon, and sodium enhances the transport of carbon from the fuel to the cladding. The decarburized fuel tends to crack, and the carburized cladding loses ductility quickly, even at 600°C. With a gas gap, there is no significant interaction with stainless steel cladding below about 800°C.

Mixed-carbide fuels have also been studied in order to broaden the single-phase field in UC so that the undesirable second phases are not present or are rendered harmless. Alloying UC with ZrC appears to provide the most promising combination, since ZrC additions increase the melting point and lower the vapor pressure. Both chromium and vanadium addition to UC have been reported to improve the compatibility of the carbide fuel with stainless steel cladding.

Uranium carbides may be prepared by a number of methods, including reaction of uranium with carbon, reaction of uranium dioxide with carbon in vaccum at elevated temperatures, or the reaction of uranium powder with a hydrocarbon such as methane.

The cold pressing is carried out in hardened steel dies. The carbide powder is first mixed with about 0.5–5% of binder lubricants, such as paraffin, camphor, Carbowax, cetyl alcohol, or beeswax dissolved in nonaqueous inert solvents such as benzene, isopropyl alcohol, or methyl alcohol. The bonded carbide powder is granulated by forcing through a screen and then loaded into the dies. The green density of the cold-pressed pellets may be as high as 80% of theoretical, and the sintered pellets may be densified to about 90% of theoretical. The optimum sintering condition is 1800°C for approximately 4 hr.

By using a feed of spherical particles of controlled particle sizes, fairly high density uranium carbide fuel pins can be fabricated by means of vibratory packing directly into the cladding tube, as with sphere-pac oxide fuel.

Arc melting and casting of uranium carbide fuel rods have been achieved in large quantities. In the skull-melting procedure the uranium carbide is arc melted in a water-cooled crucible with a graphite-tipped electrode. The molten carbide is contained in the shell or skull of solid uranium carbide in the crucible and cast into suitable molds by tilt pouring or by centrifugal casting. The castings generally have very high densities (>99%).

The mixed carbides, UC–PuC, offer a significant improvement in breeding and a shorter doubling time through their higher metal-atom density and thermal conductivity. The disadvantages of the carbide fuels are the difficulty of control of composition (stoichiometry) to be compatible with the cladding and the sodium coolant and to minimize swelling, and the lack or adequate irradiation experience at high burnups and elevated temperatures. Cost studies indicate that carbide-fueled fast reactors have a fuel-cycle cost advantage over the oxidefueled reactors.

Compared with mixed-oxide fuels, the mixed-carbide fuels have higher heavy-metal density (13 versus 9.7 g/cm^3), better neutron economics, greater thermal conductivity (10 times greater), higher linear heat rate capability [1485 W/cm (45 kW/ft) for carbide] and specific power [up to 500 W/g (U + Pu)], improved breeding gain, and lower fuel-cycle cost when compared with oxide fuel at the same burnup.

With carbide fuels prevention of carbon transport from the fuel to the cladding material or vice versa requires control of the chemical potential of carbon in the fuel (e.g., by using stoichiometric UC composition: by stabilizing the fuel with small additions of Cr, V, or Mo; or by Cr plating the pellets). Both carbide and nitride fuels have good compatibility with sodium but relatively poor oxidation resistance.

D. Nitride Fuels

Uranium mononitride UN has been studied fairly extensively as a reactor fuel but has not been used in any reactor. It possesses a combination of desirable properties: a FCC NaCl structure, a high melting temperature (2850°C for congruent melting at and above 2.5 atm of nitrogen), good thermal conductivity, high uranium density (14.32 g/cm^3), compatibility with most potential cladding materials, and good irradiation stability and fission product retention. A disadvantage is the parasitic capture of neutrons in the transmutation of nitrogen atoms by the (n, α) and (n, p) reactions and the release of nitrogen during the burnup of nitride fuel. The stability of UN in air is much higher than that of UC. The evaporation of UN has been studied under various conditions at temperature near 1700°C. Under dynamic vaccum conditions or sweep-gas conditions, the

rate of evaporation of nitrogen approaches that of uranium, resulting in the evaporation of UN without leaving an accumulation of liquid uranium on the surface of the UN.

Specimens of UN have been prepared by three fabrication methods: (1) hot isostatic pressing, (2) cold pressing and sintering, and (3) direct reaction of uranium with nitrogen through consumable arc-melting and casting procedures. The first two techniques use U_2N_3 powder formed by reacting uranium with nitrogen at 850°C followed by decomposition to UN at about 1300°C in a dynamic vacuum.

E. Fuel Element Cladding and Duct Materials

The reactor core is an assembly of fuel element bundles or subassemblies that contain the fuel rods. The cladding materials serve to maintain the design configuration of the fuel rods and to protect the fuel from the coolant medium. The cladding also prevents the fission products from entering the primary system of the reactor.

The fuel subassemblies contain spacers to maintain the coolant channel configuration. The ducts surrounding the fuel rods bundles direct the flow of coolant through the core. The ducts provide strength and support to the subassemblies and must not distort in service. The materials selected for the cladding, duct, and core structure must retain their integrity in the core environment and also have low neutron-absorption cross sections. The latter requirement limits the choice of materials to a very few, namely, aluminum, magnesium, zirconium, beryllium, graphite, and thin stainless steel for thermal reactors. In fast reactors, however, the neutron cross sections are lower, and stainless steels and nickel alloys are used extensively.

The principal stresses to which the cladding is subjected arise from the swelling of the fuel and the release of fission gases, as well as from the pressure of the coolant and the thermal stresses. There are also complex stresses resulting from fluctuating stresses at cracks in the fuel pellets and at pellet–pellet interfaces. The cladding material must possess adequate strength, ductility, and corrosion resistance. It must also be compatible with the fuel and be resistant to irradiation damage. Heat transfer considerations play an important role in the design of the cladding and may call for spiral fins or surface roughening or require spacers in the form of wire wrapped around the cladding in a spiral form or grids welded to the ducts.

V. FUEL ELEMENT DESIGN AND OPERATION

A. Design of Fuel Elements

The type and requirements of the reactor govern the design and the selection of the fuel elements and materials for the reactor. The core design must include inputs from reactor physics, engineering (fluid flow, heat transfer, and stress analysis), materials science and technology, safety, and economics. This process is always based on an iterative procedure, whereby information from experimental results and operational experiences are factored into the refinement of the design.

The fuel rods are grouped together into subassemblies, which may be enclosed by metallic ducts that act as structural members and coolant-flow channels. In pressurized water reactors, the fuel rods are not enclosed by ducts but are spaced by means of metal grids placed at intervals down the subassemblies or by wire spacers wrapped around them.

The core designer must have an appreciation of the numerous complex phenomena that occur in fuel elements during operation. These include the results of the fission process in the fuel; the variations of temperature, fission rate, and neutron flux in the core; and the sensitivity of the fuel, cladding, and core structural materials to these factors. In addition, the problems of heat and mass transfer, corrosion, irradiation damage, and fuel–clad chemical and mechanical interactions must be assessed.

The temperature limitations in the reactor core are based upon factors such as the melting temperature of the fuel and cladding materials, phase changes in the fuel, corrosion rates of the cladding and structural materials, and maximum heat flux limits set to prevent continuous film boiling of liquid coolants and to retain the integrity of the cladding during accidental power transients.

The cost of fuel failures that lead to reactor shutdown is higher than the cost of avoidance of fuel failure because the purchase of replacement power adds a considerable incremental cost (about a million dollars per day for a large power reactor). The parameters that affect fuel costs include the following: incomplete burnup, leak testing and replacement of fuel pins, the increased storage capacity and shipping and reprocessing required for failed fuel elements, and derating of the fuel. Also, fuel failures increase the costs associated with operation and maintenance of the reactor, such as maintenance of radwaste systems and limiting personnel exposure to radiation. In recent years the typical rates of fuel rod failures in power reactors have been commendably low (less than 0.001%). The goal now is to design fuel rods that are more tolerant and forgiving of reactor operational procedures, particularly the rates of power increases and power cycles.

B. Operational Factors

Operational experience with nuclear fuels in power, test, and research reactors is being continually evaluated. The

quality assurance system incorporates the various stages of design, fabrication techniques, and performance of the fuel elements. The quality assurance circuit for fuel elements includes the major tasks of fuel technology, namely, to determine the properties of the materials, develop fabrication techniques, and establish testing and inspection methods for quality control. The primary factors that limit the performance of fuel rods are pellet–clad interaction, fission gas release, and rod boxing. Much effort is being expended on the development of computer codes for fuel rod design and evaluation of the operational limits under steady-state and transient emergency conditions. The design codes have been benchmarked against operating experience and can be applied to a wide range of irradiation conditions and fuel parameters.

The important economic effects of fuel design, fuel fabrication methods, and quality control on nuclear power generating costs have been assessed in some detail. The major factors that reduce costs include decreasing fuel failure rates, increasing margin to thermal operating limits in the fuel elements, and improving fuel utilization. Thus, the performance and reliability of the fuel have a marked effect upon power generating costs. The fuel-cycle costs are approximately 25% of the nuclear operating costs. However, improved fuel performance does influence the costs of plant capital, operations, and maintenance and the total electrical system generation costs. For example, an increased core output and fuel reliability increases the plant capacity factor and thereby reduces the total system reserve requirements and costs, particularly by decreasing the need for costly replacement power.

The performance requirements for ceramic nuclear fuel elements include the following items:

1. Dimensional stability to high fuel burnups
2. Fission product retention
3. Corrosion resistance
4. Fabricability
5. Economic advantage
6. Inspectability
7. Chemical reprocessing and recycling

There are numerous variables that influence the complex relationships that govern the operating characteristics of oxide fuel elements. These include the configuration and dimensions of the fuel pellets, the compositions of the cladding, fabrication methods, fuel center temperatures, and heat fluxes. There has to be a compromise between the conflicting requirements of the materials scientist, the thermal designer, and the nuclear physicist. Long-term in-pile tests under simulated reactor operating environments are the principal means for evaluating the performance of fuel elements.

In addition to the microscopic crystal and defect structural features of the specific substances, both fuel and cladding, the macroscopic variables are neutron flux and fluence, fission rate and distribution, heat flow, mass flow, their conjugate thermal and chemical gradients and conductivities, temperature, chemical potentials, external pressure and other forces, coefficients of expansion, elastic moduli, creep coefficients, and other constitutive relationships. In spite of the complexity, empirical numerical relationships among some of the variables and processes have been devised and incorporated in computer programs that afford some degree of correlation and prediction of the performance of fuel elements and are of use in the design of reactors and of fuel element testing programs.

The practical effects on the performance and life of the fuel elements have to do largely with mechanical deformation, corrosion and failure of the cladding, and possible changes in the distribution of heat-producing fissile materials. Five major mechanisms may move the fuel radially toward the cladding in an operating fuel element: thermal expansion, fuel swelling due to the accumulation of fission products, thermal ratchetting, mechanical ratchetting of cracked fuel, and thermal diffusion. These mechanisms are interdependent and must be evaluated for the full service life of an element. At the same time, the cladding undergoes changes in dimensions, ductility, and strength due to fast-neutron-induced voids and loops, dislocation tangles, helium bubbles at grain boundaries, and possibly, grain boundary attack by Cs_2O, Se, or Te; this corrosion depending on the chemical potential of oxygen.

The simplest effect of fission product accumulation is the expansion of the solid due to the relative atomic volume of uranium and the fission products, which depends on the chemical state (e.g., cesium metal has a larger atomic volume than cesium ions). Thus, the expansion of UO_2 per at. % burnup ranges from 0.13 to 0.23% if cesium segregates as Cs_2O and to 0.54% if as Cs metal. In more dense UC, swelling is at least 1.2% per at. % burnup. The chemical state of fission products varies with the initial stoichiometry of the fuel and with burnup; that of some products is indicated in Table IV. In the ranges of higher temperature and temperature gradients, the products move toward some steady-state distribution more or less in accordance with our incomplete notions of the stability and vapor pressure of various species. The major volume changes are due to fission gases, and it is primarily their behavior that has been studied and modeled. Fifteen percent of the fission product atoms are the fission gases xenon and krypton, depending on neutron flux and spectrum; the fractions of the total fission gas atoms generated that are trapped and/or released depend on the

many factors mentioned and govern the behavior of the fuel element.

At low temperature the large krypton and xenon atoms are relatively immobile and are metastably housed singly and in small aggregates within defect structures ranging from one or two vacant sites per atom to voids and bubbles containing many atoms. Surface energy accounts for the confining forces, even for single atoms, and up to bubbles of the order 1.0 μm in diameter where bulk yield and creep strengths prevail. Sufficient vacancies to permit equilibrium of the given bubble with surface forces are provided by the atom displacement mechanisms. In addition, displacement mechanism, both knock-ons and spikes, disperse and move the aggregates, the former termed radiation-induced resolution. Thus, in a reactor even in low-temperature regions, atoms and small bubbles may move fractions of a micrometer per day, resulting in some distribution of aggregate sizes.

However, the dominant effects are at temperatures where thermally activated motion of vacancies are higher. In this range, movement occurs of all sized aggregates of fission gases to traps such as dislocations and boundaries and thence to more stable states, the most stable being a segregated gas phase.

Recent studies of the effects of temperature, thermal gradients, and stress gradients on the nucleation and migration of bubbles have elucidated the influence of these factors on fuel swelling. The bubbles migrate up the thermal gradients toward the fuel center, being held and carried along by lattice defects (dislocations, grain boundaries, precipitates, and also defects by fission recoil damage) until they are large enough to escape from or migrate along the defects. Bubble migration has been postulated to be by Brownian motion for very small bubbles, by surface diffusion when they are larger, and by an evaporation–condensation process at elevated temperatures in very large bubbles (at $r \approx 10^4$ Å). The phenomenon of fission gas resolution in irradiated fuel has been incorporated in the picture. If enough bubbles collect on a grain boundary to touch one another, continuous paths result for escape from the solid. In addition, the operating history of the fuel in the reactor must be considered, since cracks form in the fuel (in grain boundaries at high burnups) during power changes and release fission gases to the fuel–cladding gap. These are some of the processes that have been incorporated in computer codes that have been developed to predict fission gas release and swelling.

A nonsteady-state (or ratchetting) mode of mechanical fuel–cladding interactions during power changes appears to be a primary cause of diametral increases in fuel pins and end-of-life failure of LWR elements.

Fuel rod design requires a knowledge of the fraction of fission gases that is released and the fraction that is retained in the fuel as gas bubbles. The principal stresses to which the cladding is subjected arise from (1) released fission gas pressure and (2) retained gas in the fuel in bubbles that are restrained by surface tension forces, by the hoop strength of the cladding, and by the creep strength of the fuel.

There are four competing mechanisms: (1) retention of the fission gases in the fuel lattice at low temperature, (2) diffusion and release of the fission gases to the free surface of the specimen at very high temperatures, (3) growth of closed pores at intermediate temperatures leading to swelling, and (4) fission gas resolution from bubbles into the matrix. Hence, the tendency to swell is maximum at some intermediate temperatures.

Segregation of many of the solid fission products takes place in the irradiated fuel. The concentrations of the fission products vary, depending on the isotope, the thermal gradients, and the chemical activity.

The swelling due to solid fission products has been evaluated on a thermodynamic basis by assigning a chemical form to each of the fission products and a corresponding molecular or atomic volume. The nonuniform distribution of the fission products in the fuel does not allow a more quantitative assessment of the swelling. For example, cesium contributes a very large proportion of the swelling, and if it is present as cesium oxide at the fuel–cladding interface, the solid fission product contribution reduces from 0.54% to about 0.23% $\Delta V/V$ per 1% burnup.

In very-high burnup mixed-oxide fuel at elevated temperatures, the migration of nongaseous fission products out of the fuel has been observed; this migration reduces the magnitude of the fuel swelling attributed to solid fission products.

Fission gas release from thermal and fast flux irradiations has been shown to be different because of the much larger flux depression in thermal flux irradiations. In a thermal flux, there is a higher local volumetric fission rate near the surface regions of the fuel than at the center, with the rate differing by a factor as high as two between the surface and the center. Hence, the fission gas concentration is larger in the cooler surface regions of the fuel body. In a fast flux, on the other hand, there is a relatively uniform volumetric fission rate and fission gas generation rate.

Another difference between thermal and fast flux irradiations is that the fission gas yield per fission is greater in a thermal flux than in a fast flux. In a thermal flux, the ^{135}Xe captures a neutron to yield ^{136}Xe, which remains gaseous instead of decaying to ^{135}Cs. Hence, there is more fission gas present in fuel irradiated in a thermal flux. There is also a tendency toward lower fission gas release at lower linear power densities.

The fission products Cs and I combine to form caesium iodide, which migrates down the temperature gradients in the fuel rods to the fuel–clad gap and through the gap to the coolest regions. Problems of internal corrosion and strain deformation in the cladding have been ascribed to the presence of these fission products.

C. Fuel Element Modeling

During the past decade a lot progress has been made in the computer modeling of nuclear fuel elements. This approach provides a quantitative basis for the design of fuel elements and allows a more rational planning and analysis of irradiation tests. However, it is essential to generate reliable input data on the properties of the fuels and materials for insertion into the many subroutines of the codes. The publication of data compilations for the light-water reactors (MATPRO) and for the fast breeder reactors (NSMH) has been an invaluable aid in code development studies.

Computer codes have been developed in the United States and Europe to describe fast breeder and light-water reactor fuels. They address the complex processes occurring during the life of operating fuel elements as functions of the power histories by rigorous analyses based on first principles. These codes have been well documented and are on file at the Argonne National Laboratory, Argonne, Illinois 60439, USA. They can be obtained on tape and IBM cards with user's manual.

The most challenging problem in the development of the fuel element modeling codes has been the complex effects of neutron irradiation on materials and fuels. The cladding and structural stainless steel alloys in fast reactor cores swell through void formation by migration of the vacancies formed by fast neutron irradiation. This leads to a movement of the cladding away from the fuel and thereby to a reduction of fuel-induced stresses. Radiation-induced creep could cause further movement of the cladding under the pressure of fission gases.

The ductility of the irradiated cladding is markedly reduced (to less than 1%), and little deformation can be accommodated by the cladding. The alloys also lose ductility through defect cluster formation and as a result of helium formation by (n, α) transmutation reactions. The defect clusters are effective at the lower temperatures (0.2–0.5 melting temperature). The helium atoms segregate at grain boundaries and dislocations at elevated temperatures (above approximately 550°C), resulting in loss of ductility and creep strength. The swelling-temperature relationships follow a bell-shaped curve, with the peak swelling temperature for austenitic stainless steel being approximately 500°C. The nonuniformity of temperature distributions and neutron fluxes in the core can lead to severe bowing of the cladding and the ducts. The factors involved in irradiation damage are illustrated in Figs. 12–17.

VI. FUEL ELEMENT EXPERIENCE IN POWER REACTORS

A. Light-Water Reactors

The fuel element designs attempt to meet the goals of economical fuel cycle costs within the framework of the regulatory requirements for safe plant operation. The power distribution and shutdown capability are maintained by means of control rod systems in the reactor core. A large PWR [1000 MWe] plant core contains about 200 fuel assemblies, consisting of Zircaloy-clad uranium dioxide pellets. The fuel assemblies are 3.8 m in length and are arranged within a 3.4 m diameter region. In the BWRs there are about three times as many assemblies because the fuel rods are larger in diameter than those of the PWR.

The remedies that have been applied to solve the fuels problems have been quite effective, resulting in marked improvements in fuel performance in recent years in the LWRs. An important example of this is the development of stable fuel pellets by control of their grain size, pore structure, and density and the back-filling of the fuel rods with pressurized helium to prevent cladding collapse and to improve the gap conductivity at high burnups. The improved reliability of the fuel elements, and the establishment of safe margins between the operating limits and the damage limits in the fuel, have been important factors in improving plant capacity factors and availabilities.

The property data for LWR fuel rod materials are available in the handbook *MATPRO*, which has been compiled with support from the U.S. Nuclear Regulatory Commission. Extensive studies have been in progress during the past decade to develop fuel designs that will achieve much higher burnups (over 4000 GJ/kg M), so as to allow longer fuel cycles (18-month cycles) with high reliability and to survive ramps to about 60 kW/m and 6–24-hr holds at peak power even after high burnups. The incorporation of a thin copper or zirconium barrier between the fuel and the cladding has been a successful means to attain this goal.

The basic design limits for the fuel elements in LWRs are set by heat transfer, clad strain, center melting of the UO_2 fuel, and endurance of the fuel pin and element, including corrosion, fretting, vibration, and mechanical and metallurgical damage. Current BWR and PWR peak local burnups in fuel assemblies are on the order of 50 MWd/kg U and peak steady-state linear heat ratings of up to 630 W/cm, with a fission-gas release value of about 30%.

The most serious problem that has occurred in fuel element operational experience is fuel densification, which

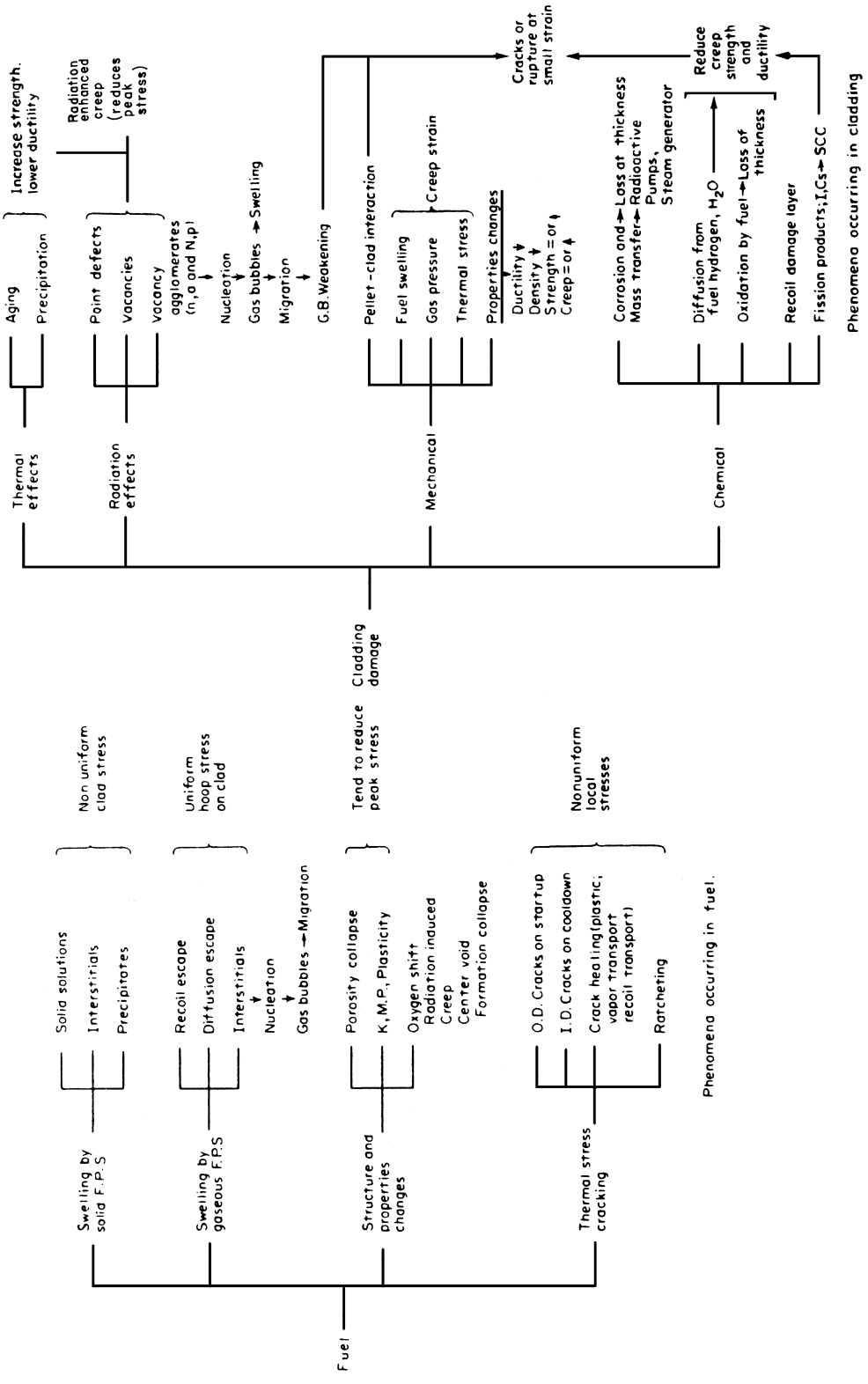

FIGURE 12 Phenomena occurring in cladding and fuel. [Courtesy of B. R. T. Frost.]

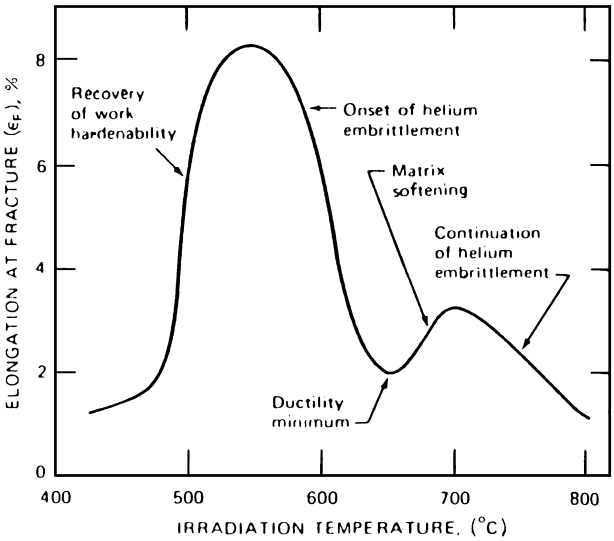

FIGURE 13 Effect of irradiation temperature on the ductility of stainless steel. [Courtesy of D. Olander.]

results in collapsed sections in fuel rods. This effect was observed during 1972 in several large PWRs. The cladding collapses were found to have resulted from the occurrence of axial gaps in the fuel pellet columns within the rods. All of the rods with the flattened sections were of the unpressurized type. The inward creep of the cladding was not arrested where gaps in the fuel pellet column occurred until essentially complete flattening had taken place. Completion of the fuel densification process has required less than 2000 hr of reactor operation in the power range. The effects of fuel densification cause a decrease in the heat transfer and increase in the linear heat generation rate of the fuel pellet, resulting in local power peaking and increased stored energy in the fuel rod.

In-reactor fuel densification is ascribed to irradiation-induced reduction of porosity with radiation-enhanced vacancy diffusion in the UO_2 fuel pellets, thermal sintering, and irradiation-enhanced creep of UO_2. Fuel structures

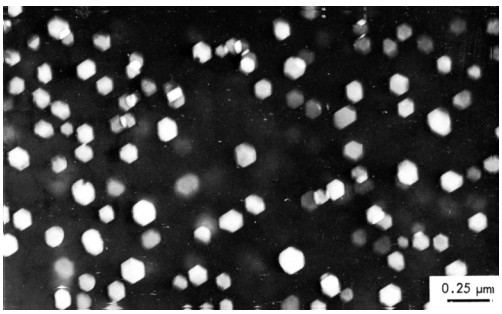

FIGURE 14 Void structure in irradiated stainless steel. [From M. T. Simnad and J. P. Howe (1979). *In* "Materials Science in Energy Technology" (G. G. Libowitz and M. S. Whittingham, eds.), Academic Press, New York.]

(controlled pore size and grain size) have been identified that resist densification in-pile. Prepressurizing the fuel with helium also avoids clad flattening.

A gap is provided between the fuel pellets and the cladding to accommodate fuel expansion. Control of the pellet density near 90% and provision of concave or dished pellet ends, and possibly a central hole, also allow accommodation of fuel swelling.

The design limit for the plastic strain in the Zircaloy cladding is 1% (caused by swelling and thermal expansion of pellet). The linear power rating corresponding to this limitation is 930 W/cm.

In LWRs the types of fuel failures that have been reported include the following.

1. Clad failure by excessive strain from fuel swelling and fuel–clad interactions
2. Internal corrosion of cladding resulting from presence of moisture, fluoride, or hydrogen in the fuel
3. Wear and fretting of clad by extraneous metallic pieces
4. Defects in the cladding or in the welds
5. Hot spots in the clad due to deposits of scale or poor heat transfer on corner rods

Zirconium alloys were developed for water reactors for fuel element cladding and pressure tubes because of their low neutron cross section, adequate strength in the operating temperature range, and satisfactory resistance to corrosion by water at high temperatures. In the United States, over three million Zircaloy-clad UO_2 fuel rods have operated in LWRs.

The Zircaloy cladding must withstand thermal, bending, and hoop stresses and resist corrosion. The corrosion rate of the zirconium alloy and the hydrogen embrittlement accompanying excessive corrosion limit the coolant temperature and, hence, influence the thermal efficiency and capital cost of water reactors. The design criteria must make allowance for the degradation of heat transfer conditions and loss of ductility with time and temperature due to the buildup of the corrosion film, hydride formation (design limit 600 ppm), and crud buildup. The maximum allowable strain in the zirconium alloy cladding is set at 1% throughout the core life. One cause of low ductility is the precipitation of hydride platelette normal to the stress direction. The fission gas pressure is limited by means of a plenum space to accommodate the gases released from the fuel pellets (about 0.116 ratio of plenum void space to volume of fuel) (see Figs. 9 and 10).

The zirconium alloy claddings are also susceptible to hydriding on the internal surfaces from reaction with hydrogeneous impurities in the fuel rod (e.g., adsorbed moisture, the presence of fluoride contamination, and

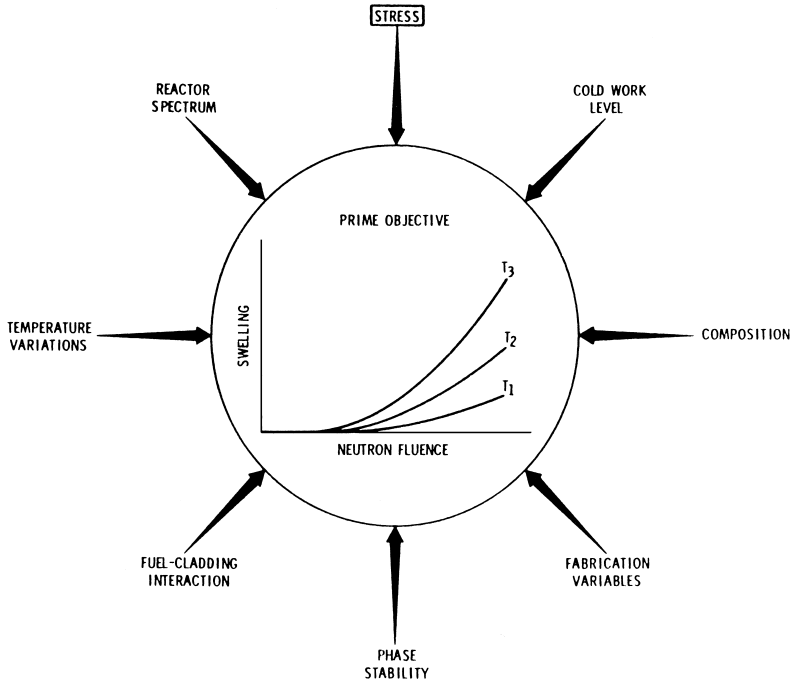

FIGURE 15 Factors influencing swelling. [From M. T. Simnad and J. P. Howe (1979). *In* "Materials Science in Energy Technology" (G. G. Libowitz and M. S. Whittingham, eds.), Academic Press, New York.]

hydrocarbons). These impurities can be eliminated by drying the fuel in the cladding during fabrication (approximately 250°C for a day). In PWRs the corrosion rate (0.1–0.3 mg/dm^2/day) at 300–350°C) of Zircaloy is increased slightly by irradiation. In BWRs, there is a significant increase (up to tenfold) in the corrosion rate of Zircaloys because of the radiolytic oxygen in the BWR coolant, but the rate of hydrogen pickup is similar for both types of reactors.

B. Heavy Water Reactors

In PHWR-CANDU and SGHWR reactors, the main structural materials are zirconium and aluminum alloys. The use of heavy water as a moderator provides good neutron economy and permits a wide range of possible fuel cycles (including Th–^{233}U or U–Pu) and fuel management schemes. The UO_2 fuel elements are positioned in Zircaloy-2 pressure tubes that pass through an aluminum calandria containing the heavy water moderator (see Fig. 11).

In the CANDU reactors the natural UO_2 pellet fuel is clad with Zircaloy-4, and the fuel rods are separated by Zircaloy-4 spacers brazed to the cladding. The fuel elements are made up of bundles of 28 rods. The maximum fuel rod rating is about 690 W/cm. The fuel temperature is 400°C surface and 2000°C center. The operational experience with the fuel elements in the CANDU reactor has been highly satisfactory. A recent modification has significantly improved the fuel's performance. The new fuel rods include a thin graphite layer between the fuel and cladding, designated CANLUB fuel. This has decreased friction and the strain concentrations in cladding expanded over fuel fragments resulting from power cycling. The mean burnup in heavy water reactors is about 10.5 MWd/kg U, and the maximum specific fuel rod rating is about 20 kW/ft.

C. Carbon Dioxide Gas-Cooled Reactors

The first generation of commercial nuclear power reactors in Britain and France were cooled by carbon dioxide gas. These reactors were graphite moderated and fueled with natural uranium metal rods clad in magnesium alloys, the performance of which has been covered. The first of these reactors (Calder Hall) started generating electricity in 1956. The second-generation CO_2-cooled graphite moderated reactors in Britain (the AGRs) use slightly enriched UO_2 clad in stainless steel. These fuel elements can operate at higher temperatures to much greater burnups, giving higher efficiencies and ratings.

The magnesium alloy cladding in the Magnox reactors is finned to improve heat transfer. The "adjusted" uranium alloy fuel has antiratchetting grooves that lock the fuel to the cladding and minimize thermal cycling effects. The fuel temperature has to be kept below 665°C to avoid the phase transformation that occurs in uranium at this

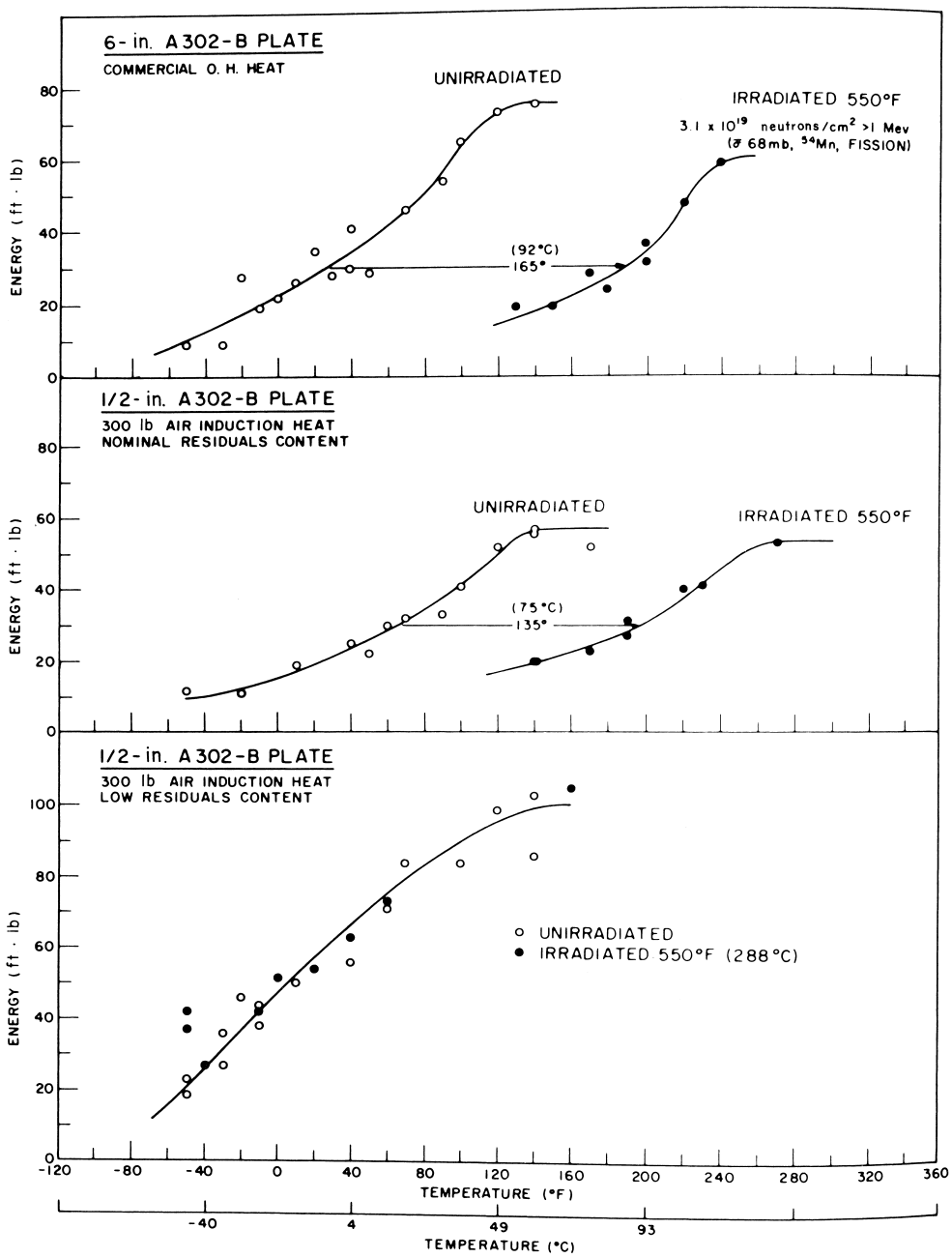

FIGURE 16 Radiation embrittlement sensitivities of pressure vessel steel. [From M. T. Simnad and J. P. Howe (1979). *In* "Materials Science in Energy Technology" (G. G. Libowitz and M. S. Whittingham, eds.), Academic Press, New York.]

temperature. These fuel elements have performed very well, allowing high plant capacity factors that tend to compensate for the low thermal efficiency and low burn up of the fuel.

The AGR reactors use a super stainless steel (Fe-20%, Cr-25%, Ni-0.5%, Nb) alloy that has good high-temperature strength and oxidation resistance. The cladding is ribbed to enhance heat transfer. The fuel pellets are in the form of hollow pellets to accommodate ramp-induced swelling.

D. Helium Gas-Cooled Reactors

The high-temperature gas-cooled reactors (HTGR) use helium gas at about 800°C and 5 MPa (685 psi) as the primary coolant, graphite as the neutron moderator and

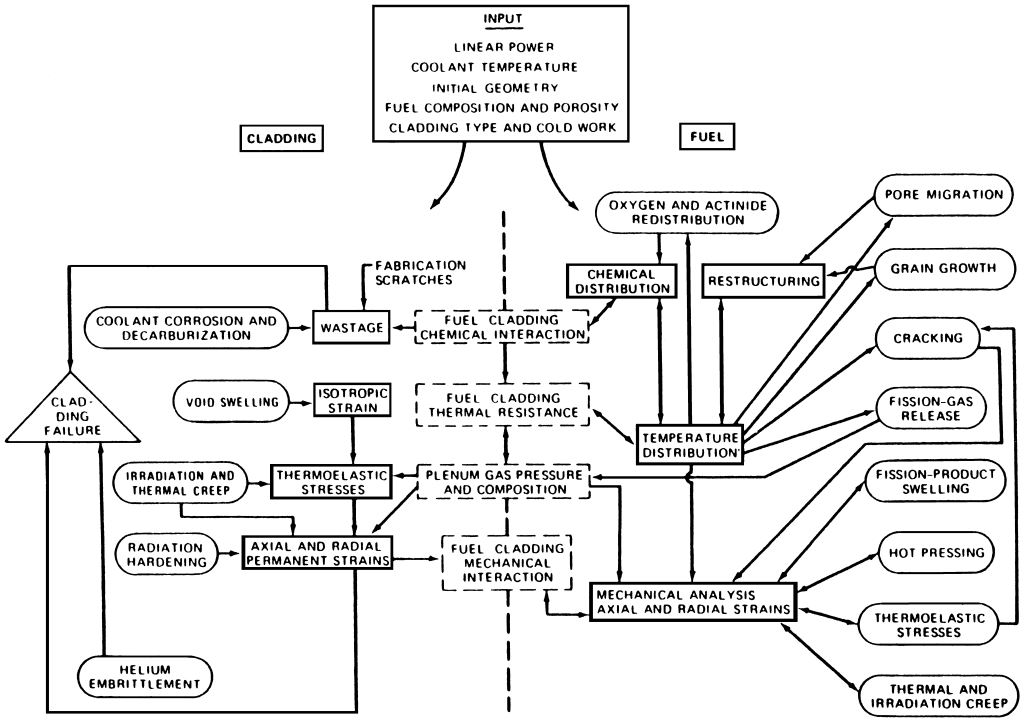

FIGURE 17 Interrelation of mechanical, metallurgical, and chemical processes in fuel element irradiation behavior. [Courtesy of D. Olander.]

fuel element structural material, and coated (Th-U) carbide or oxide fuel particles dispersed in a graphite matrix as the fuel. Currently TRISO-UC_2 and BISO-ThO_2 (Fig. 18) are the candidate fissile and fertile fuel particles, respectively, for the large commercial HTGRs being developed. The manner in which advantage may be taken of high-temperature materials deserves emphasis.

The choice of graphite as the moderator and core structural material is based on its unique chemical, physical, and mechanical properties at elevated temperatures and on its very low neutron cross section, satisfactory radiation stability, ease of fabrication, and low cost. The use of the graphite moderator as a diluent of the fuel permits much greater fuel dilution than would otherwise be possible and thereby minimizes radiation damage, increases specific power, and greatly extends the heat transfer surface.

The Th-^{233}U standard fuel cycle (see Fig. 2) (with ^{235}U as the initial fissionable fuel) is used because of its potential for achieving a higher fuel utilization and lower power cost than any other thermal spectrum reactor system. The neutronic characteristics of ^{233}U are far superior to those of either plutonium or ^{235}U in thermal systems. A substantial portion of the power comes from fission of the ^{233}U converted from the fertile ^{232}Th. The carbon-to-thorium ratio is optimum at a value of 240. This concept promises a conversion ratio as high as 0.85, a steam-heat-power efficiency of about 39%, and a low fuel cost, even with high ore costs. The annual uranium requirements for the HTGR are 30–40% less than for a pressurized-water reactor (PWR) with plutonium recycle operation. Enrichment requirements for the HTGR, but the total separative work commitment over the life of the reactor is about the same for the HTGR and PWR. Because it can use plutonium as a fissile nuclide and provide a burnup of over 100 MWd/kg, the HTGR can also use plutonium more efficiently than light-water reactors.

The use of coated-particle fuel allows the high-temperature operation of the core to very high burnup (80%) of the fissile fuel, with extremely high retention of the fission products. Also, the ^{235}U fissile particles are segregated from the ^{233}Np and can be separated during the fuel reprocessing operation. The average fuel burnup of 100 MWd/kg obtainable is by far the highest of all existing thermal reactor systems.

Inherent safety is achieved in the HTGRs by virtue of the single phase and inertness of the coolant, the high heat capacity of the fuel elements and moderator and their refractory nature, the negative temperature coefficient (which provides a safe shutdown mechanism) redundancy in the circulating systems, and assurred retention of 4% of the coolant. The fission product plateout activity is limited to low levels that permit direct maintenance.

The fuel exposure, as measured in MWd/kg, is not an important constraint in the HTGR. The average exposure

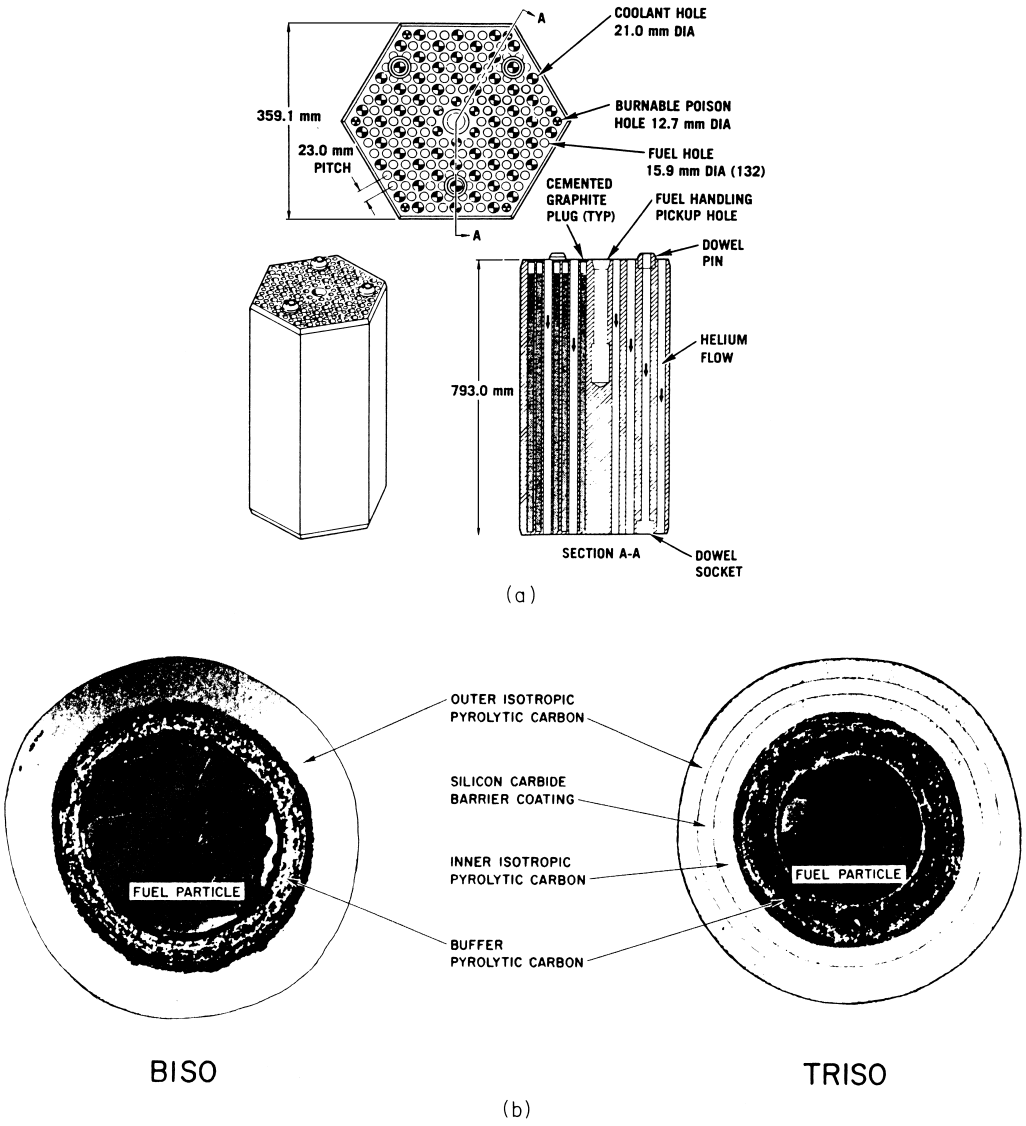

FIGURE 18 (a) HTGR standard fuel element. (b) Typical coated fuel particles. [Form M. T. Simnad and J. P. Howe (1979). *In* "Materials Science in Energy Technology" (G. G. Libowitz and M. S. Whittingham, eds.), Academic Press, New York.]

is about 95 MWd/kg, but the burnup in individual fuel particles in the HTGR reaches 0.75 fission per initial metal atom, or about 700 MWD/kg. The coatings on the fuel particles have been developed as a result of extensive studies on the production and properties of pyrolytic carbon coatings and irradiation tests on coated particles. The coatings are designed to retain the fission products and to withstand the effects of fuel burnup and irradiation. These include the internal pressure buildup due to fission gas accumulation, fission recoil damage, and stresses arising from fast neutron irradiation-induced dimensional changes in the pyrocarbon coatings. The inner buffer layer of low-density pyrocarbon serves to protect the outer layers from fission recoil damage and provides void space to accommodate the fission gases, fuel swelling, and coating contraction. The silicon carbide layer in the TRISO coatings decreases the release of certain fission products that migrate readily through the pyrocarbon (e.g., barium, strontium, and cesium).

The pebble bed reactor, developed and built in Germany, is a helium gas-cooled, high-temperature reactor fueled with spherical, graphite matrix fuel elements surrounded by bottom and side graphite reflectors. The fuel elements consist of pyrolytic carbon coated $(U,Th)C_2$ spherical particles dispersed in a graphite matrix and encased in spherical graphite balls, 6 cm in diameter (Fig. 19). The

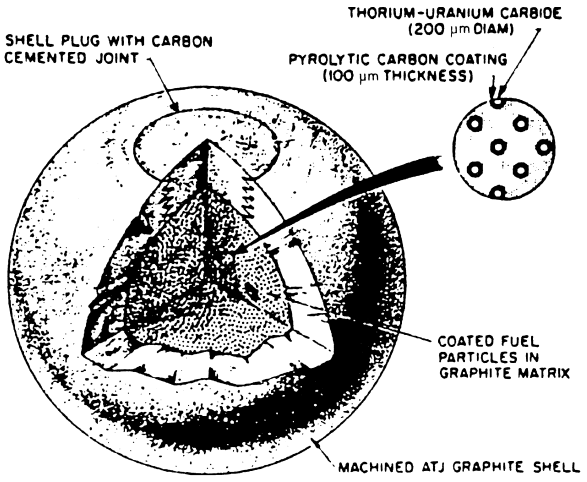

FIGURE 19 Spherical AVR fuel element. [From M. T. Simnad and J. P. Howe (1979). *In* "Materials Science in Energy Technology" (G. G. Libowitz and M. S. Whittingham, eds.), Academic Press, New York.]

continuous on-load refueling is accomplished by removing used fuel from the bottom of the core and adding new fuel at the top.

The AVR reactor has certain basic characteristics that are similar to those of the other helium-cooled reactors. These include (1) the use of graphite both as structural material and moderator, (2) (U,Th) C_2 fuel particles coated with pyrolytic carbon coatings and dispersed in a graphite matrix, and (3) high gas temperatures that allow the use of modern steam cycles. This leads to high efficiency and good conversion of fertile elements into fissile materials (^{232}Th into ^{233}U). The reactor is also compact as are other helium-cooled reactors. The AVR reactor is a prototype designed to yield construction and operation experience and to prove the feasibility of the pebble bed concept.

E. Fast Breeder Reactor Fuel Elements

Fast breeder reactors increase fuel usage to over 70% of the uranium employed, compared with about 1% in thermal reactors. In a 30-yr period, a fast breeder reactor of 1000 MW(e) capacity would require about 23,000 kg (23 tons) of uranium compared with about 3 million kg (3000 tons) in a light-water-cooled reactor. The fuel-cycle cost is also expected to be significantly lower in fast breeder power reactors than in thermal reactors or fossil-fueled power stations. The cost of power is not strongly influenced by the cost of uranium in fast breeder reactors.

There will be an adequate supply of plutonium (about 600 tons) from LWRs by the year 2020, when commercial fast breeder reactors are expected to be available. This amount of plutonium is sufficient of fuel as many as 200 fast breeder reactors. The value of plutonium is much greater in a fast reactor than in a thermal reactor. Although the technical feasibility and advantages of the fast breeder reactor have been demonstrated, the goal of the fast reactor programs at present is to improve the technology so as to build economically viable fast breeder reactors in the next decade.

The fuel rods in fast breeder reactors consist of stainless steel clad, mixed-oxide (U, Pu)O_2 fuel. A major development in recent years has been the successful demonstration of the use of ferritic stainless steels and modified austenitic stainless steels, which exhibit adequate resistance to swelling and embrittlement under fastneutron irradiation. The design of the fuel elements for fast breeder reactors is shown in Fig. 20, and the metallurgical and chemical processes in fuel element irradiation are depicted in Fig. 17.

In a fast breeder reactor, the fuel configuration consists of a highly enriched fuel surrounded both axially and radially by fertile blanket material (natural or depleted UO_2) in which plutonium is bred. The enrichment required decreases with increasing size of the reactor, ranging from fully enriched fuel for small reactors to about 20% enrichment in a 1000-MW(e) reactor. The breeding process counteracts loss of reactivity with burnup, so that burnups of over 10% of heavy atoms of 100 MWd/kg can be achieved. The main limiting facor on burnup is degradation of cladding and duct materials by radiation damage.

The fuel elements are grouped into hexagonal subassemblies that are stacked together to form a compact cylindrical core. The fuel pins are spaced by wires wrapped around them or by grids. The power distribution in the core is flattened by means of zones of differing enrichment in the core. The fuel rods in the enriched region have small diameters to avoid excessive central fuel temperature with the high heat rating that is required. The components of fuel-cycle cost include the following items: fabrication, breeding credit, inventory, and capitalization charges.

Developments in the performance of advanced fuel and structural materials in fast breeder reactors were presented in international symposia (Lyons, France, 22–26 July 1985, and Knoxville, Tennessee, April 1985). The U.S. experience has been summarized in a series of papers from the Hanford Engineering Development Laboratory (HEDL), where the Fast Flux Test Facility (FFTF) has served as a powerful tool for irradiation testing of fuels and materials for commercial reactors. The following section is based upon the information presented in recent HEDL papers, which were kindly furnished by Drs. Ersel Evans and R. D. Leggett.

The FFTF is a 400-MW(t) sodium-cooled fast reactor with a peak fast neutron flux of 7×10^{15} n/(cm^3 sec). The

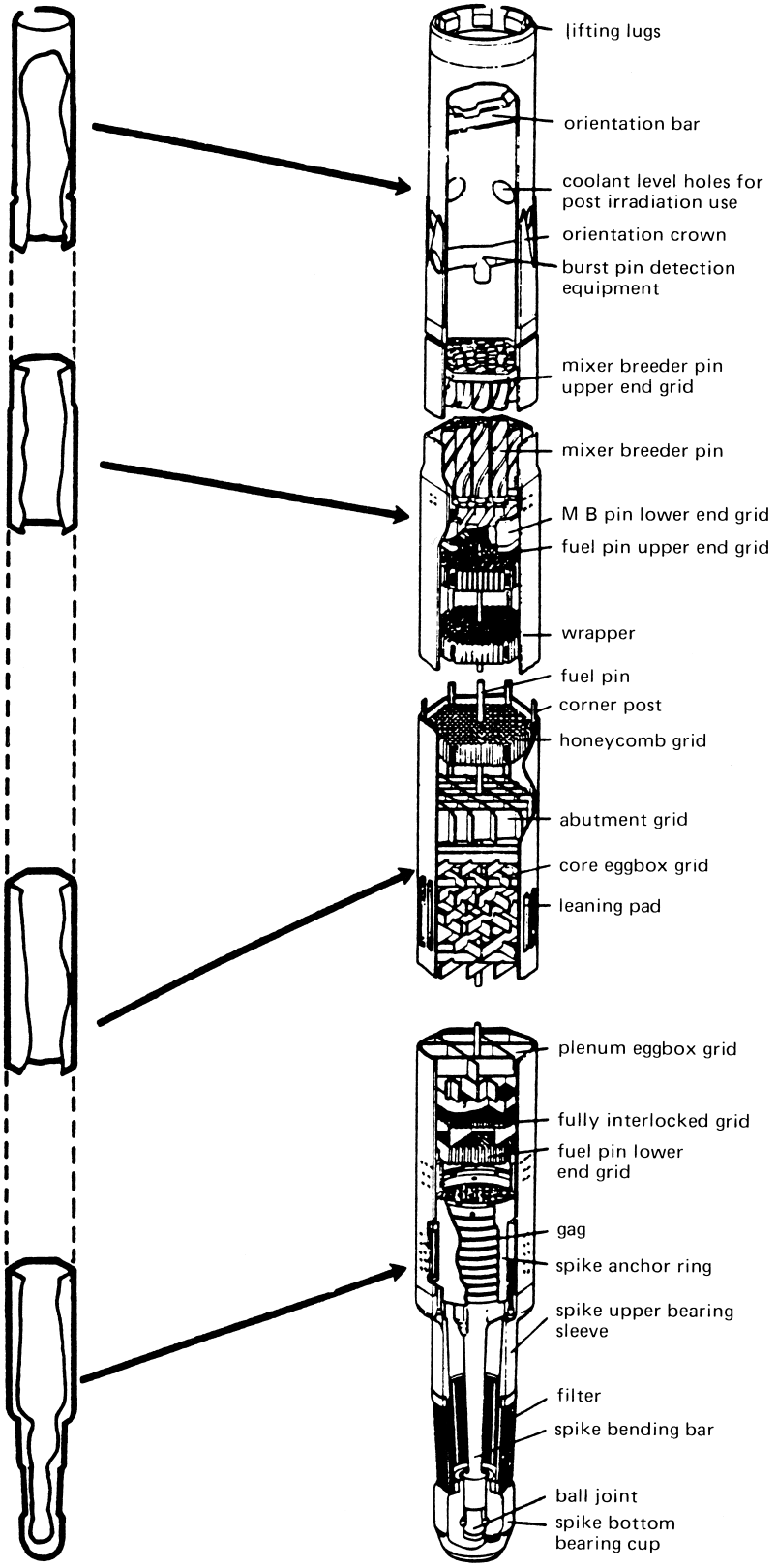

FIGURE 20 Fuel assembly schematic for FBR. [From M. T. Simnad and J. P. Howe (1979). *In* "Materials Science in Energy Technology" (G. G. Libowitz and M. S. Whittingham, eds.), Academic Press, New York.]

reactor began routine, full-power operation in April 1982. In the 1000 equivalent full-power days (EFPD) since, the plant has demonstrated excellent performance and reliability. The complex irradiation testing program in the FFTF has yielded extensive technical data. The most encouraging test has been the successful irradiation of 125 standard driver fuel assemblies, containing over 27,000 commercially fabricated fuel pins, to the equivalent of the plant's one-year reference fuel system without a single cladding failure. The tests were continued to proof-test a long-lifetime core system with a number of 3–5-yr components, as well as to evaluate innovative plant improvements that are intended to reduce capital costs and to improve the LMFBR's economic potential. The reactor's on-mission time was 98%.

Important experiments were performed in the FFTF, which included fifty instrumented fuel assemblies. Mixed-oxide fuel, as well as two assemblies containing carbide fuel, have been irradiated in the FFTF. Peak burnup for the mixed-oxide fuel was 155 MWd/kg as of December 1986. The limits to fuel performance were established in these tests. The extended-life fuel systems were tested in the Core Demonstration Experiment, which can take advantage of improved materials that are more resistant to radiation damage and of knowledge gained of fuel assembly behavior in the FFTF. The extension of fuel and component life in the reactor core will result in important reductions in the costs associated with fuel fabrication and inventory, reprocessing and waste disposal, and operations and maintenance. It will also be necessary to reduce the fuel fabrication cost from $4000/kg to $3000/kg to reduce the annual fuel cost to less than the LWR. This should be feasible by process simplification, automation, and application of learning.

A special irradiation device in the FFTF, the materials open test facility (MOTA), served to test nonfuel materials in the reactor core under controlled temperature conditions. Over 3000 material samples have been irradiated in MOTA, including ferritic (HT-9) and modified austenitic stainless (D-9 and D-9I) steels to be used in the long-life demonstration test. The results of these tests indicate that mixed-oxide fuel clad with the stainless steel alloys HT-9, and D-9, or with dispersion-strengthened ferritic stainless steel, enclosed in an HT-9 alloy duct, can be expected to achieve the extended burnup goals of 3-yr in-core residence capability. The ferritic alloys appear to be the only clear candidate alloys capable of achieving the 5-yr residence objective, corresponding to 250 MWd/kg peak burnup and 4.0×10^{23} n/cm^2 ($E = 0.1$ MeV) peak neutron fluence.

An automated, remotely-controlled fuel pin fabrication process was installed in the secure automated fabrication (SAF) facility at HEDL. This facility implements process improvements and specifications and has produced mixed uranium–plutonium oxide fuel for the FFTF. The fabrication and support systems in this facility are reported to be designed for computer-controlled operation from a centralized control room. The throughput capacity was 6 MT/yr. The FFTF was shut down in 1995.

The inherent safety features of the mixed-oxide fuel in LMFBRs include a large negative Doppler coefficient, a dispersive rather than compactive behavior during design-basis hypothetical accidents, and a low-energy molten fuel–coolant interaction. The latter has been well demonstrated in the BR-5-10 test reactor in Russia, where a core was operated until cladding breaches had occurred in about 40% of the fuel assemblies. The reactor operation was stable, and only a small increase occurred in the level of radioactivity of the primary coolant system.

The operational experience with LMFBR reactors has been very encouraging in all the countries that have built these systems, namely France, Germany, Japan, United Kingdom, the former Soviet Union, and United States. A dozen LMFBRs have been in operation to date, ranging in power from 5 MW(t) to 3000 MW(t) and providing an experience range that now exceeds 70 yr of reactor operation.

VII. NEUTRON MODERATOR MATERIALS

Moderator materials serve to slow down the high-energy neutrons liberated in the nuclear fission reaction, mainly as a result of elastic scattering reactions. These materials contribute to the conservation of neutrons in a thermal or epithermal nuclear reactor core by slowing them down to the energy levels at which the fission reaction occurs most efficiently. The most desirable properties in moderator materials are low atomic number, small cross section for neutron capture or adsorption, and large scattering cross section for neutrons.

The reactor core is generally surrounded by a neutron reflector, which also serves to conserve neutrons by backscattering the neutrons that have escaped from the core. The critical mass of the fissile nuclide is decreased by the use of a reflector. The same materials that are used as moderators may be used as reflectors in thermal and epithermal reactors. In fast reactors, where most of the fissions are caused by high-energy neutrons, the reflector consists of a dense element of high mass number to minimize moderation of the neutrons that are backscattered into the core. The most commonly used moderator and reflector materials include ordinary and heavy water (deuterium oxide), carbon (graphite), beryllium, and zirconium hybride. In fast reactors, which contain no moderator

in the core, the reflector may be steel and depleted uranium. The choice of moderator and reflector materials for a particular reactor is based upon nuclear considerations and upon operating conditions (e.g., temperature, irradiation damage properties, compatibility with coolant, and cladding). Solid moderator and reflector materials are considered here.

A. Graphite

Graphite is the most extensively used solid moderator and reflector material for thermal reactors, although its nuclear properties are not as good as those of beryllium or heavy water. It is available in high purity and at reasonable cost. Its mechanical properties, high thermal conductivity, and thermal stability are good up to extremely high temperatures. However, at elevated temperatures, it is attacked by reactor coolants such as air, carbon dioxide, water vapor, and liquid sodium. It also carburizes cladding materials such as stainless steels and zircaloys at high operating temperatures.

The most stable commercial grade graphites are the near-isotropic materials, such as H-451, which is being evaluated for HTGRs. There are few experimental data above 4×10^{22} nvt ($E > 0.1$ MeV) fluence range, the probable limit of usefulness of graphite in reactors.

The viscoelastic response of graphite materials in irradiation environments has been analyzed. In this approach, the effects of irradiation-induced creep and dimensional changes are considered in the stress analysis. The mechanical response of graphite is assumed to be viscoelastic, and the constitutive relations are inferred from measurements. A computer program has been developed for analysis of plane strain, generalized plane strain, and axisymmetric problems, using the finite element method. The material properties are considered to be temperature dependent as well as neutron flux dependent.

The dimensional-change behavior of nuclear graphites generally is in the pattern just mentioned. In extruded material there is first a contraction in the direction transverse to the extrusion direction and then a turnaround and rapid expansion. In the direction parallel to extrusion, there is a contraction at an increasing and then decreasing rate, followed by a turnaround and expansion. The rapid expansion is associated with porosity generation between filler particles; the isotropic and finer grained materials expand at a lower rate. The initial shrinkage rate is temperature dependent, decreasing up to 800°C and then increasing with increasing temperature up to 1200–1400°C.

The thermal conductivity of the graphites is primarily by phonons and is markedly reduced by irradiation at low temperature. The rate of reduction declines, and the conductivity approaches a saturation level, which increases as the irradiation temperature increases. Eventually, when irradiation-induced expansion starts, the conductivity again decreases, probably because of internal cracking. The time constant for approach to saturation appears to increase linearly with irradiation temperature, whereas the conductivity after saturation increases exponentially with irradiation temperature.

The irradiation-induced creep of graphite has been studied. The transient creep strain and the steady-state creep constant increase with increasing irradiation temperature over the interval 500–1200°C. For different graphites, the transient creep strain and steady-state creep constant are both inversely proportional to Young's modulus. Creep strains up to 2.5% in tension and 5% in compression have been reported. However, there is some indication that in isotropic graphites compressive creep slows down or stops when the strain reaches 2–3%.

The new near-isotropic commercial graphites, which use isotropic petroleum coke as filler for improved radiation stability, have been fabricated in large sections and evaluated for use as core components in large HTGRs. These graphites are typified by grades H-451 (Great Lakes Carbon) and TS-1340 (Union Carbide Corp.).

B. Zirconium Hydride

The atomic density of hydrogen in many metal hydrides is greater than in liquid hydrogen or in water. Metal hydrides are efficient moderators and neutron shielding materials and are particularly suitable for minimizing the core shield volume.

Examples of the use of metal hydrides as moderators include the following reactor systems. In the gas-cooled Aircraft Nuclear Propulsion (ANP) reactor program (General Electric) yttrium hydride was in the form of large, hexagonal-cross-section rods that were metal-clad and had central axial holes for fuel elements and coolant channels. These elements were capable of operation at 1000°C in air. The SNAP space power reactors (Atomics International) used uranium–zirconium hydride rods as a combination fuel-moderator element. A similar uranium–zirconium hydride fuel element was developed for the TRIGA research reactors (General Atomic). The sodium-cooled prototype reactor KNK (Interatom and Karlsruhe) contained metal-clad zirconium hydride as a moderator element for operation at temperatures up to 600°C. The hydride bodies should be clad to prevent significant loss of hydrogen at elevated temperatures. The rates of hydrogen loss through stainless steel cladding 250 μm thick have been determined. A 1% loss of hydrogen per year occurs at about 500°C. Glass–enamel-coated metal cladding (about 76 μm thick internal coating) has a very low permeability (about 10% of that of molybdenum)

and has been used successfully in the SNAP (space nuclear power) reactor UZrH fuel elements at temperatures up to 700°C.

Most of the irradiation experience to date is limited to the uranium–zirconium hydride fuels used in the SNAP and TRIGA reactors. The presence of uranium (about 8–10 wt. %) complicates the situation because of the damage resulting from fission recoils and fission gases. Transmission electron-microscope studies of irradiated samples indicated the presence of voids within the range of fission recoils in the vicinity of the uranium fuel particles, with the regions far from the fuel particles retaining a microstructure similar to unirradiated material. The UZrH fuel exhibits high growth rate during initial operation, the so-called offset growth period, which has been ascribed to the vacancy-condensation type of growth phenomenon over the temperature range where voids are stable. The voids are also associated with the delta–epsilon phase banding.

C. Beryllium

Beryllium metal has been used as the moderator and reflector in a number of reactors, such as test reactors (MTR, ETR, and ATR); the Oak Ridge research reactors (ORR and HFIR); the Experimental Breeder Reactor (EBR-II): research reactors in France, Japan, and the Russia; and the SNAP reactors. Beryllium has many of the nuclear properties desirable for a moderator and reflector, such as low neutron-absorption cross section, high neutron-scattering cross section, low atomic weight, high melting point, high specific heat, and fairly good corrosion resistance in water. Its disadvantages are high cost, low ductility, toxicity, crystallite growth, and swelling under irradiation at high temperatures. These features combine to eliminate its use as a structural material in commercial reactors.

Beryllium has a close-packed hexagonal crystal structure, alpha form, with a c/a ratio of 1.5671 and lattice parameters $a = 2.2866$ Å and $c = 3.5833$ Å. The alpha form transforms to the body-centered cubic form at about 1250°C, with a lattice constant of $a = 2.551$ Å.

A number of parameters influence the mechanical properties of beryllium, such as orientation of the test specimen, purity, iron and BeO content, grain size and anisotropy, strain rate. temperature, method of production, surface condition, and irradiation.

Commercial beryllium has good resistance to atmospheric corrosion. It shows variable behavior in high temperature water. The oxidation of beryllium in air or dry oxygen follows a parabolic rate at temperatures up to about 700°C. However, at temperatures above 750°C a breakaway reaction that is associated with the appearance of voids sets in after an induction period.

For each transmuted Be atom, two atoms of He and one Li atom are produced. Thus, for an exposure of 10^{22} n/cm^2 about 22 cm^3 He gas at STP, equivalent to 1 at. %, is present in the metal. The solubility of helium in beryllium is extremely low. Because of its high cross section, the Li soon reaches an equilibrium level, whereas the quantity of ^{3}He increases with time. Both these isotopes have high neutron cross sections.

At temperatures below approximately 500°C, the rate of growth of irradiated beryllium is about 0.2% per 10^{22} nvt ($E > 1$ MeV) up to a fluence of 10^{22} nvt. The helium at low temperatures is in enforced solid solution in the beryllium lattice, and no gas bubbles are observed. At elevated temperatures (above 600°C), the helium gas migrates and agglomerates into gas bubbles, which results in marked swelling. The gas bubbles themselves can migrate by a surface diffusion mechanism and coalesce into larger bubbles.

The stresses arising from the inhomogeneous growth of beryllium can result in cracking even in the low-temperature range. Bowing, cracking, and swelling occurred in MTR reflector blocks subjected to fast neutron fluences in the range $4–10 \times 10^{21}$ nvt.

The design thermal stress for beryllium reflectors has been limited to 12,000–15,000 psi. Considerable swelling occurs when beryllium is irradiated to high fluences (above approximately 1×10^{21} nvt) at high temperatures or is annealed at high temperatures after irradiation at low temperatures. The swelling threshol (or breakaway) temperature decreases as the fast neutron fluence increases. The lowest threshold temperature reported is 550°C for a fast fluence of 1.6×10^{22} nvt. However, there is evidence from yield strength measurements that suggests that helium mobility is significant at temperatures above 300°C.

VIII. REACTOR CONTROL MATERIALS

Reactor power control is accomplished by means of control rods and burnable poisons that contain neutron-absorbing materials. In PWRs a soluble chemical, boric acid, in the primary coolant also provides power control. The concentration of boric acid is varied to control reactivity changes caused by depletion of fuel and buildup of fission products.

A. Boron Carbide

Boron carbide is the most extensively used control material. It is used in thermal and fast reactors. The data on boron carbide obtained from thermal reactors differ substantially from the results of fast neutron spectra irradiations. There have also been differences in irradiation behavior reported from experiments by different

groups, particularly in the relations between temperature and swelling and in the rates of release of tritium.

The absorption of neutrons by ^{10}B results in the primary formation of ^{7}Li, helium, and tritium by the following reactions:

$$B + n \rightarrow He + Li + 2.3\ MeV$$

$$B + n \rightarrow T + He + He.$$

The fast neutron capture cross section of the ^{10}B isotope is greater than that of any other known isotope. The absorption cross section in a thermal neutron flux is much larger than that in a fast breeder reactor spectrum, resulting in considerable self-shielding in a thermal reactor flux and a sharply decreasing reaction profile. Hence, it is difficult to extrapolate thermal reactor irradiation data to predict the behavior of boron carbide in fast breeder reactor spectra, where there is virtually no self-shielding and where the reaction rates and irradiation are homogeneous throughout the absorber material.

Boron carbide has a boron concentration of 85% of that of elemental boron. Natural boron contains 19.8% of the high-cross-section isotope ^{10}B, and the content of ^{10}B in natural boron carbide is 14.7%. The thermal neutron absorption cross section of ^{10}B is 4000 b and of natural B_4C about 600 b. The energy of the secondary gamma radiation is 0.5 MeV. The neutron-absorption cross section decreases with an increase in the neutron energy by the $1/V$ relation for neutron energies below 100 eV. It remains fairly constant for energies between 100 eV and 0.1 MeV and has several resonances between 0.5 and 5 MeV. The cross section in a fast breeder reactor spectrum is about 1 b.

Boron carbide pellets and structures can be produced by cold pressing and sintering (70–80% density) or by hot pressing. The FFTF uses hot-pressed pellets of 92% density. In the hot-pressing operation, the B_4C powder is first cold pressed into pellet form and then hot pressed in graphite dies at temperatures from 2050 to 2300°C under pressure of 10.3 MPa (1500 psi). The density is controlled by varying the temperature and the pressure. Some reactors have used boron carbide in powder form, vibratory-packed in 20% cold-worked type 316 stainless steel cladding.

The British protoytype fast reactor (PFR) studies on boron carbide compatibility covered the temperature range of 450–1000°C for test durations of up to 15 months. The reaction rate was determined to be acceptable up to 600°C. Copper coating (125 μm thick on a 25-μm nickel substrate coating) was used on the inside diameter of the M-316 stainless steel cladding to restrict the interaction. In heat treatment tests, no interaction has been found for exposure times of 10,000 hr at 850°C. No failure of the copper plating occurred after thermal cycling 40 times between 400 and 750°C. In-pile tests have also been carried out in the Dounreay fast reactor (DFR). The density of the B_4C pellets in the DFR experiments is in the range 86–90% theoretical density.

The use of boronated graphite in HTGRs has been reported. Boronated graphites containing 23–43 wt. % boron as B_4C were successfully irradiated at 300–750°C to fast neutron fluences up to 7×10^{25} n/m^2 (E > 29 fJ).

The interaction of B_4C graphite bodies with metal cladding (Hastelloy X and Incoloy 800) has been investigated. The reaction rate is found to be appreciable only above 800°C.

B. Silver–Base Alloys

The combination of silver with 15 wt. % cadmium and 5 wt. % indium provides a control rod alloy with suitable neutron absorption properties over the spectrum of neutron energies present in pressurized light-water reactors. This alloy clad in stainless steel or Inconel has been used as control rod material in PWRs. However, with any significant increase in the price of silver, alternate materials would be under consideration.

C. Hafnium

The successful use of hafnium as a control rod material in the Shippingport PWR and submarine reactors has led to work on its application in other LWR reactors. Hafnium can be used without excessive reactivity loss or damage over extended irradiation (approximately 40 yr) for the lifetimes of the plants. Cost considerations will govern the extent to which Hf will be used in control rods.

D. Europium Hexaboride

There has been increasing interest in the use of europium hexaboride as an alternate control material to B_4C in fast breeder reactors.

E. Europium Oxide

Europium oxide has been under development and is being considered as a neutron absorber material for use in the control rods of fast breeder reactors in the United States, Britain, Germany, and Russia. The BOR-60 fast breeder reactor (Russia) has operated satisfactorily since 1972 with europium oxide in one of the control rods. The principal difference in design results from the absence of gas generation in europium oxide under irradiation with its (n, γ) reaction, and longer reactivity lifetime. This allows the use of thinner wall cladding with no gas plenum.

With a pellet density of 93% and a diametral gap of 8 mils (200 μm) (to accomodate 1.5% swelling), the europium oxide assembly is expected to have at least the same nuclear worth (reduction of neutron multiplication) as the rods containing B_4C. The centerline temperature is calculated to be between 700 and 950°C, based on unirradiated thermal conductivity values. Lifetimes of at least two years are predicted, based on assessment of the probable changes in the reactivity of Eu_2O_3 when exposed to fast neutrons, because the nuclides resulting from transmutation also have large cross sections. These studies indicate a rate of loss of reactivity worth with neutron exposure one-third that of control rods containing B_4C. The main areas of concern are determining actual nuclear worths, maintaining pellet dimensional stability, and accommodating decay heating.

F. Burnable Poisons

Neutron-absorbing materials are also used in reactors to prevent power peaking in the early stages of operation of the core and to allow optimum burnup of the fuel and power shaping in the core. Boric acid solution in the primary coolant is used in PWRs as the burnable poison to provide power control. Ceramic pellets containing burnable poisons are included in the fuel rods in most power reactors. Examples of these materials are boron carbide dispersions in alumina, borosilicate glass, and gadolinium oxide dispersed in the uranium dioxide fuel.

IX. STRUCTURAL MATERIALS

The structural components of nuclear reactor systems include the pressure vessel, piping, and valves, which are fabricated from a number of different materials. The components are joined by welding, and a large reactor contains thousands of welds and many kilometers of piping.

The pressure vessel in LWRs is constructed from welded heat-treated steel plate and forgings. The vessel is given a final postweld heat treatment at about 880 K. The wall thickness of the vessel is about 230 mm in a LWR and 165 mm in a BWR for a 1000-MW(e) system. In the sodium-cooled fast breeder reactors, a relatively thin-walled (75 mm) stainless steel tank is suitable because of the relatively low pressure (1 MPa).

The piping and valves are made of either cast or forged stainless steel or austenitic clad ferritic steel. However, the problems with stress corrosion cracking of austenitic stainless steels in the BWRs has led to the selection of carbon steel (unclad SA 106 Grade B and SA 333 Grade 6) in the most recent BWR designs.

A number of remedial measures have been developed to control stress corrosion cracking of welded piping in the BWRs that contain the susceptible Type 304 stainless steel piping. Stress corrosion cracking in this material is governed by the degree of sensitization of the alloy, the tensile stress level, and the nature of the corrodant. The stresses arise from both applied and internal stresses and from grinding operations. The presence of even parts per billion of radiolytic oxygen in the BWR coolant water plays a very significant role in stress corrosion cracking. It is the interactions among these parameters that result in crack initiation and propagation.

The remedial actions that have been examined include solution heat-treating the weldments to eliminate weld sensitization; installing corrosion-resistant cladding to isolate the sensitized regions; induction heating the outer pipe wall at the weld region while water-cooling the inside surface so as to generate compressive stresses in the inside surface upon cooldown; and heat-sink welding, which also results in compressive stresses on the inside surface.

The materials employed in nuclear reactors are fabricated to special nuclear-grade specifications. Significant advances have been made in the design analysis methods and in the selection and development of structural materials for nuclear plants in recent years.

The design rules for the major nuclear components are defined by ASME Boiler and Pressure Vessel Code, Section III, Nuclear Power Plant Components. These rules generally apply to LWRs, where the components are designed to operate in the subcreep range of temperatures. For applications where the components operate in the creep regime, the ASME Code Case 1592 is applicable. This code provides creep stresses that limit the elastically calculated load-controlled stresses for the stainless steels Types 304 and 316, Alloy 800H, and 2-1/4 Cr-1 Mo ferritic steel. A factor of safety is applied to the analyses to account for defects in the materials (Section XI of the ASME Boiler and Pressure Vessel Code). The limits on the service degradation of materials properties are defined in the Code of Federal Regulations (10CFR50) and in the Regulatory Guides issued by the U.S. Nuclear Regulatory Commission (USNRC).

The Structural Integrity Plan is used to assess the effects of materials flaws quantitatively to preclude failures resulting from flaw instabilities. This plan considers the influence of flaw size and the mechanical properties (particularly fatigue, corrosion fatigue, and stress corrosion) by means of analytical techniques.

Nuclear power reactors are contained in two types of pressure vessels, namely, steel pressure vessels (for most types of reactors) or prestressed concrete pressure vessels (for many gas-cooled reactors). The exception to this is the use of Zircaloy pressure tubes in the heavy-water moderated reactors (CANDU and SGHWR). The steels used are ferritic low-alloy steels (Mn-Mo-Ni grades,

ASTM-type A302-B, A537B, and A533-B plates and ASTM-A508 Class 2 in the United States), which are lined with stainless steel in LWR applications.

The pressure vessel materials are subject to neutron irradiation during operation of the reactors. This results in significant effects on the mechanical properties of the steels used for the pressure vessels, primarily an increase of the yield strength, decrease of the ductility, a rise in the brittle-ductile transition temperature, and decreased fracture toughness.

The neutron exposures on the LWR vessels range from about 5×10^{18} n/cm$^2 > 1$ MeV to as high as 5×10^{19} n/cm$^2 > 1$ MeV. The important factors governing radiation embrittlement of pressure vessel steels are the sensitivity of the steel to embrittlement, the neutron fluence and energy spectrum, and the irradiation temperature. Much useful information is being accumulated from reactor vessel surveillance programs. The profound influence of minor constituents (tramp impurities), particularly copper and phosphorous, on the irradiation embrittlement of steel at elevated temperatures has been demonstrated at the U.S. Naval Research laboratory. The temperature range of transition can be raised by as much as 300°C by neutron irradiation.

The main criterion used in specifying the operational limitation of the pressure vessel steel is the nil-ductility transition temperature (NDT), which in the irradiated steel must not exceed 33°C below the lowest operating temperature. An important theoretical development in recent years has been the concept of the damage function, which evaluates the relative damage by a given neutron energy spectrum. There is no significant temperature effect from room temperature up to approximately 230°C, above which the damage diminishes with increasing temperature.

The fine-grained vacuum deoxidized steels with low impurity content (Cu $< 0.1\%$, P and S $< 0.012\%$) provide a material with remarkably good resistance to irradiation embrittlement.

Recent assessments of the engineering damage cross sections for neutron embrittlement of pressure vessel steels have concluded that most ($\sim$94%) of the neutron embrittlement is caused by neutrons of energies >0.1 MeV. It is recommended that the threshold of >0.1 MeV be adopted for use in assessment of neutron embrittlement of reactor pressure vessel steels and also that the computed damage-fluence values incorporating damage cross sections be used to account for the influence of neutron spectrum on embrittlement.

Prestressed concrete reactor vessels (PCRV) have been used for the gas-cooled reactors in France, Britain, and the United States. The PCRV consists of concrete reinforced with bonded, deformed steel bars and unbonded prestressing systems. The main cavity, penetrations, and cross ducts are lined with a 20-mm-thick liner keyed to the concrete with anchors. The liner and closures form a leak-tight barrier for the primary coolant. The liner is cooled with water. Thermal insulation keeps the concrete within allowable temperature limits. The prestressing of the concrete acts to produce a net compressive stress on both the main cavity liner and the penetration liners, thereby making it highly unlikely that crack propagation could occur. The tendons that are in tension and that provide the confining strength are not irradiated. Moreover, they may be monitored and replaced if evidence of weakness is observed.

SEE ALSO THE FOLLOWING ARTICLES

FISSION REACTOR PHYSICS • NUCLEAR FUEL CYCLES • NUCLEAR POWER REACTORS • NUCLEAR SAFEGUARDS • RADIATION PHYSICS • RADIOACTIVE WASTE DISPOSAL • SPACE NUCLEAR POWER

BIBLIOGRAPHY

Cochran, R. G., and Tsoulfanidis, N. (1999). "The Nuclear Fuel Cycle: Analysis and Management," American Nuclear Society, La Grange Road, Illinois.

Frost, B. R. T. (ed.). (1994). Nuclear materials. *In* "Materials Science and Technology, A Comprehensive Treatment" (R. W. Cahn, H. Haasen, and E. J. Kramer, eds.), vol. 10. VCH Publishers, Inc., New York.

J. Nucl. Mat., monthly journal published by North-Holland, Amsterdam.

Kaufman, A. R. (ed.). (1962). "Nuclear Fuel Elements," Wiley, New York.

Olander, D. R. (1976). "Fundamental Aspects of Nuclear Fuel Elements," TID-26-11P. National Technical Information Service, Springfield, Virginia.

Roberts, J. T. A. (1981). "Structural Materials in Nuclear Power Systems," Plenum, New York.

Simnad, M. T. (1971). "Fuel Element Experience in Nuclear Power Reactors," American Nuclear Society, La Grange Park, Illinois.

Simnad, M. T. (1989). "Overview of fast breeder reactors," *Energy Int. J.* **23,** 523–532.

Simnad, M. T. (1989). "Review of Fuel Element Developments for Water-Cooled Nuclear Power Reactors," TPR-299. International Atomic Energy Agency, Vienna.

Simnad, M. T. (2001). Shielding materials in nuclear reactors. *In* "Encyclopedia of Materials Science and Technology" (R. W. Cahn, ed.) to be published, Elsevier, Amsterdam.

Simnad, M. T., and Howe, J. P. (1979). Materials for nuclear fission power reactor technology. *In* "Materials Science in Energy Technology" (G. G. Libowitz and M. S. Whittingham, eds.), pp. 32–143. Academic Press, New York.



Nuclear Reactor Theory

Ronald A. Knief
XE Corporation

I. Overview
II. Neutron Physics
III. Reactor Physics
IV. Design Calculations

GLOSSARY

Chain reaction Sustained reaction wherein neutrons cause fissions, which in turn produce more neutrons that cause the next generation of fissions.

Critical Condition where a fission chain reaction is stable with production balancing losses at a nonzero neutron level.

Core Region within a reactor occupied by the nuclear fuel that supports the fission chain reaction.

Cross sections Measures of probability for interaction between nuclei and neutrons; the *microscopic cross section* is the probability per unit atom density of material per unit distance of neutron travel that a reaction will occur; the *macroscopic cross section* is the probability per unit distance of neutron travel that a reaction will occur.

Delayed neutrons Neutrons emitted after fission following the first radioactive decay of certain fission fragments.

Fissile Material capable of sustaining a fission chain reaction.

Fission Process in which a heavy nucleus splits into two or more large fragments and releases kinetic energy.

Leakage Loss of neutrons from the fission chain reaction when they travel beyond the boundary of the fuel core.

Multiplication Ratio of neutron production rate to neutron loss rate; infinite multiplication factor k_∞ neglects leakage; effective multiplication factor k includes leakage; $k = 1$ is the critical condition.

Neutron flux Scalar quantity, the product of neutron density and neutron speed, used to characterize a neutron population participating in nuclear reactions.

Prompt neutrons Neutrons emitted at the instant of fission.

Reactivity Measure of excess neutron multiplication defined as $(k-1)/k$ for effective multiplication factor k; reactivity equals 0 is the critical condition.

Reactor Combination of fissile and other materials in a geometric arrangement designed to support a neutron chain reaction.

NUCLEAR REACTOR THEORY—the theory of neutron chain-reacting systems—combines the principles of nuclear physics and neutron transport. Its primary focus is to describe reactor systems that use nuclear fission for energy production or other purposes.

I. OVERVIEW

It was discovered in 1938 that neutron bombardment could cause uranium to split, or fission, and release a large amount of energy. With the subsequent determination that the uranium-235 (^{235}U) isotope not only fissioned but also emitted additional neutrons, the prospect emerged of a sustained chain reaction and production of usable energy.

Nuclear reactor theory evolved from the combination of experimental and calculational methods used in support of controlling the fission chain reaction for research or energy generation. The detailed description of the neutron population considered the mechanisms for neutron production, absorption, and leakage in each of the materials present and through time-dependent changes in composition, temperatures, and other characteristics. Early empirical methods have been enhanced by sophisticated computer-based procedures.

II. NEUTRON PHYSICS

The subset of nuclear physics that is of most interest in nuclear reactor theory includes all reactions initiated by or producing neutrons. The more significant concepts and terms are reviewed here.

An atom is viewed simplistically as consisting of orbital electrons and a massive central nucleus somewhat akin to planets and a sun in a solar system. The electrons each carry a negative charge while the nucleus consists of positively charged protons and uncharged neutrons. The neutral atom consists of equal numbers of electrons and protons.

An arbitrary nuclear species or nuclide may be symbolized as ${}^{A}_{Z}\mathrm{X}$ for atomic number Z electrons and protons, atomic mass number A particles (protons plus neutrons) in the nucleus, and chemical element X. The atomic mass number definition recognizes that the proton and neutron have nearly equal mass and that they account for the vast majority of the overall mass of each nuclide. The atomic number Z and chemical symbol X correspond to the same chemical element.

Nuclides of a given atomic number with different atomic mass number are called isotopes. By definition each isotope has the same chemical properties; however, neutron-reaction characteristics may vary dramatically as, for example, is particularly evident with isotopes of uranium ^{233}U, ^{235}U, and ^{238}U, as described later.

One of the most dramatic observations in nuclear physics was that when dealing with masses of nuclei and their constituent particles "the whole is not equal to the sum of its parts." When the parts are assembled, the resulting atom is observed to have missing mass, or a mass defect Δ according to

$$\Delta = [Z(m_\mathrm{p} + m_\mathrm{e}) + (A - Z)m_\mathrm{n}] - M_\mathrm{atom}, \qquad (1)$$

where the masses m_p, m_e, and m_n of the proton, electron, and neutron, respectively, are multiplied by their number present in the atom of mass M_atom. This mass is converted into kinetic energy at the time the nucleus is formed according to the famous expression developed by Albert Einstein

$$E = mc^2 \qquad (2)$$

for kinetic energy E, mass m, and proportionality constant c^2, where c is the speed of light in a vacuum. Commonly used units for energy and mass, respectively, are mega-electron-volts ($1\ \mathrm{MeV} = 10^6$ electron volts $= 1.60 \times 10^{-13}$ J) and atomic mass unit ($1\ \mathrm{amu} = \frac{1}{12}$ mass of carbon-12 atom $= 1.66 \times 10^{-27}$ kg $= 931$ MeV).

The energy associated with the mass defect is the binding energy BE according to

$$\mathrm{BE} = [M_\mathrm{atom} - Z(m_\mathrm{p} + m_\mathrm{e}) - (A - Z)m_\mathrm{n}]c^2 = -\Delta c^2. \qquad (3)$$

The binding energy is seen to be negative since it represents energy given off when the particles are assembled or conversely, which would need to be added to cause disassembly.

As the number of constituent particles in nuclides increases, so does the binding energy. The rate of increase, however, is not uniform as shown by Fig. 1—the binding energy per nucleon plotted as a function of atomic mass number. That the nuclides in the center of the range are more tightly bound on the average than those at either end gives rise to both the fission and fusion phenomena.

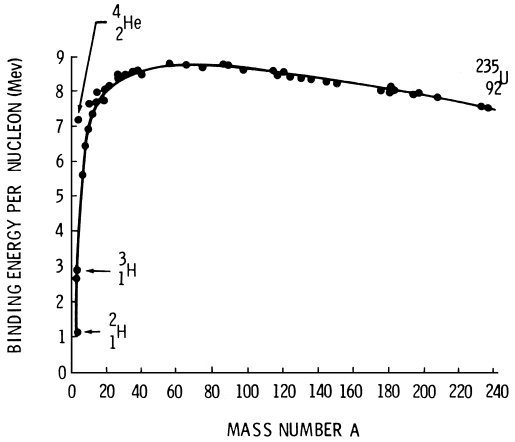

FIGURE 1 Binding energy per nucleon as a function of atomic mass number.

In fission, splitting a heavy (relatively loosely bound) nucleus (e.g., ^{235}U, into two lighter (more tightly bound) nuclei results in the release of excess binding energy) and, thus, the energy available from fission. Fusion occurs when two light nuclei (e.g., ^{2}D [deuterium] and ^{3}T [tritium], the heavy isotopes of hydrogen) are combined to more tightly bound products (e.g., ^{4}He [helium] and a neutron), thereby releasing energy.

The interactions among the particles in a nucleus are extremely complex. Certain combinations of proton and neutron numbers lead to very tightly bound nuclei, while others may result in more loosely bound nuclei or form none at all. When an existing nucleus can become more stable (i.e., more tightly bound) by emitting particulate or electromagnetic radiation, it may undergo radioactive decay and emit spontaneously an α particle ($^{4}_{2}\alpha$ or helium nucleus), β particle ($^{0}_{-1}\beta$ or electron), or γ ray ($^{0}_{0}\gamma$ or photon of electromagnetic radiation).

Radioactive decay is described by the equation

$$n(t) = n(0)e^{-\lambda t}, \tag{4}$$

for nuclide population n, decay constant λ (the probability per unit time that a nucleus will decay), and time t. A characteristic lifetime for radioactive nuclides is the half-life $T_{1/2}$

$$T_{1/2} = (\ln\ 2)/\lambda, \tag{5}$$

the time (statistically averaged) required for a "large" sample to decay to one-half of its initial size.

A. Reactions

Most known radionuclides (i.e., nuclides, which are radioactive) are produced when nuclear particles strike and interact with nuclei. A typical reaction may be represented by the equation

$$\mathrm{X} + \mathrm{x} \rightarrow (\mathrm{C})^{*} \rightarrow \mathrm{Y} + \mathrm{y}, \tag{6}$$

for target nucleus X, projectile particle x, compound nucleus (C)*, product nucleus Y, and product particle y. These latter designations are somewhat arbitrary since the projectile and the target may both be moving and the products may consist of more than two nuclear species. The compound nucleus temporarily contains all of the mass and charge involved in the reaction. However, this compound nucleus is highly unstable in an energy sense, existing for only about 10^{-14} sec before decaying to the products.

1. Conservation

Nuclear reactions (as well as radioactive decay processes) occur such that the total amounts remain unchanged of

1. charge
2. mass number, or number of nucleons
3. total energy
4. linear and angular momentum

Thus, the quantities are said to be conserved, even though their distributions between the initial and final constituents may change significantly.

Conservation of charge and mass allow a wide range of reactions to be postulated. A shorthand version of Eq. (4) can be written as

$$\mathrm{X(x,\ y)Y} \qquad \text{or} \qquad \mathrm{X(x,\ y)}, \tag{7}$$

since the identity of the unknown product nuclide Y can be determined by charge and mass-number arithmetic. Total energy considerations determine which of postulated reactions are feasible. Angular momentum (and other) characteristics relate to the relative probability among the reactions that meet the charge, mass number, and total energy requirements.

Conservation of total energy implies a balance of both the kinetic energy E_i and the energy associated with mass $M_i c^2$ [from Eq. (2)] for each participant i in the reaction, such that

$$E_{\mathrm{X}} + M_{\mathrm{X}}c^2 + E_{\mathrm{x}} + M_{\mathrm{x}}c^2 = E_{\mathrm{Y}} + M_{\mathrm{Y}}c^2 + E_{\mathrm{y}} + M_{\mathrm{y}}c^2. \tag{8}$$

Rearranging terms in Eq. (8) shows that

$$[(E_{\mathrm{Y}} + E_{\mathrm{y}})\,(E_{\mathrm{X}} + E_{\mathrm{x}})] = [(M_{\mathrm{X}} + M_{\mathrm{x}}) - (M_{\mathrm{Y}} + M_{\mathrm{y}})]c^2, \tag{9}$$

where the left-hand side of the equation is known as the Q value for the reaction. When $Q > 0$, the kinetic energy of the products is greater than that of the initial reactants implying that mass is converted to kinetic energy. These reactions are said to be exothermal or exoergic since they result in a net release of kinetic energy.

When $Q < 0$, the endothermal or endoergic reaction converts kinetic energy into mass. Such reactions have a minimum threshold energy, which must be added to the system to allow for the mass increase in Eq. (9).

2. Reaction Types

Many nuclear reaction types have been observed experimentally. Those of direct interest here involve neutrons as projectiles or as product particles.

A neutron striking ^{235}U, for example, leads to formation of a compound nucleus (^{236}U)*, which may divide in one

of several possible ways. A scattering event is said to have occurred when a single neutron is emitted according to

$$^{235}_{92}\mathrm{U} + ^{1}_{0}\mathrm{n} \rightarrow \left(^{236}_{92}\mathrm{U}\right)^{*} \rightarrow ^{235*}_{92}\mathrm{U} + ^{1}_{0}\mathrm{n}.$$

(Note how charge and mass number are conserved in this and other reactions.) The product neutron need not be (and likely is not) the same neutron as the projectile although the net effect is as if the neutron "bounced off" the target nucleus. If kinetic energy is conserved, the process is elastic scattering if some of the kinetic energy is lost by conversion to mass in the nucleus, it is inelastic scattering. The most important effect of scattering on a chain reaction is usually the resulting change in neutron energy or direction. Energy changes are largest when neutrons scatter from nuclei of low atomic mass (e.g., hydrogen or carbon).

The reaction ^{235}U(n, γ), or

$$^{235}_{92}\mathrm{U} + ^{1}_{0}\mathrm{n} \rightarrow \left(^{236}_{92}\mathrm{U}\right)^{*} \rightarrow ^{236}_{92}\mathrm{U} + ^{0}_{0}\gamma,$$

is known as radiative capture or simply n, γ. The capture gamma in this case has an energy corresponding roughly to the binding energy per nucleon shown on Fig. 1 for this extra neutron. The reaction in ^{235}U results in the nonfission loss of a nucleus. For other nuclides, the reaction, or activation, product may be radioactive and cause handling or other problems.

In a multiple neutron reaction, the compound nucleus de-excites by emitting two or more neutrons. These reactions are generally endoergic with a threshold energy required of the incoming neutron.

A typical fission reaction is

$$^{235}_{92}\mathrm{U} + ^{1}_{0}\mathrm{n} \rightarrow \left(^{236}_{92}\mathrm{U}\right)^{*} \rightarrow \mathrm{F}_1 + \mathrm{F}_2 + ^{0}_{0}\gamma\text{'s} + ^{1}_{0}\mathrm{n}\text{'s},$$

yielding two fission fragments plus several gamma rays and neutrons. As described in the next section, a variety of fission fragment nuclides and of gamma and neutron numbers are observed.

A number of neutron-induced reactions in nuclides lighter than uranium produce charged particles. One example is the ^{10}B(n, α) reaction

$$^{10}_{5}\mathrm{B} + ^{1}_{0}\mathrm{n} \rightarrow \left(^{11}_{5}\mathrm{B}\right)^{*} \rightarrow ^{7}_{3}\mathrm{Li} + ^{4}_{2}\alpha,$$

where boron-10 is converted to lithium-7 plus an alpha particle. This reaction can be used for poisoning, or removal of neutrons from, a chain reaction.

Another reaction type of interest is that with a product that is a neutron. The ^{9}Be(α, n) reaction

$$^{9}_{4}\mathrm{Be} + ^{4}_{2}\alpha \rightarrow \left(^{13}_{6}\mathrm{C}\right)^{*} \rightarrow ^{12}_{6}\mathrm{C} + ^{1}_{0}\mathrm{n},$$

for instance, can be used as an external neutron source by mixing an alpha emitter, such as radium or plutonium, with beryllium.

B. Fission

The fission reaction may be described through a simple qualitative model which views the nucleus like a liquid drop that reacts to the forces upon and within it. In equilibrium the nuclear drop takes on a spherical shape; when disturbed by the addition of energy it begins to oscillate. An oscillation of sufficient magnitude causes elongation which, if it leads to necking down in the middle, can result in a splitting into two or more fragments. A large amount of energy can be released in the process (e.g., as described with respect to Fig. 1).

Almost any nucleus can be fissioned if enough external energy is provided. However, only specific nuclides of elements with $Z > 90$ have low enough threshold energies for practical energy production. Some heavy nuclides, e.g., californium-252 [^{252}Cf], are so unstable as to exhibit spontaneous fission. Charged particles, gamma rays, and neutrons are all capable of inducing fission, although only the latter are of significance in the neutron chain reactions used currently for practical energy production.

A neutron entering a heavy nucleus results in a binding energy change and an energy addition by its mere presence. When this energy alone is sufficient to cause fission, the nuclide is said to be fissile. The uranium isotopes ^{235}U and ^{233}U and plutonium isotopes ^{239}Pu and ^{241}Pu are fissile nuclides which can be fissioned by neutrons of any energy (including the "thermal" neutrons, with energies averaging a fraction of an electron volt, shown later to be of particular significance).

A nuclide is fissionable if it can be fissioned by neutrons. This includes all fissile species, but also those that fission only with high-energy, "above-threshold" neutrons on the order of an MeV. Examples of the latter are ^{232}Th, ^{238}U, and ^{240}Pu.

Among the fissile nuclides, only ^{235}U exists in nature. The others are produced through nuclear reactions with target nuclei that are said to be fertile. The reactions (and, in two of the cases, subsequent radioactive decay steps) for production of fissile ^{233}U, ^{239}Pu, and ^{241}Pu, respectively, from fertile ^{232}Th, ^{238}U, and ^{240}Pu are shown in Fig. 2.

A fissioning nucleus usually splits into two fragments of unequal mass. An example is shown in Fig. 3. Overall, several hundred fragments and a few times that many radioactive decay products have been identified. Certain of the fragments and products warrant special attention related to delayed neutron production, neutron poisoning, or radioactive waste handling (as described later).

Thermal-neutron fission of ^{235}U produces an average of about 2.5 neutrons. The majority of these are prompt neutrons emitted at the time of fission. A small fraction are delayed neutrons emitted by fission fragments from seconds to minutes later.

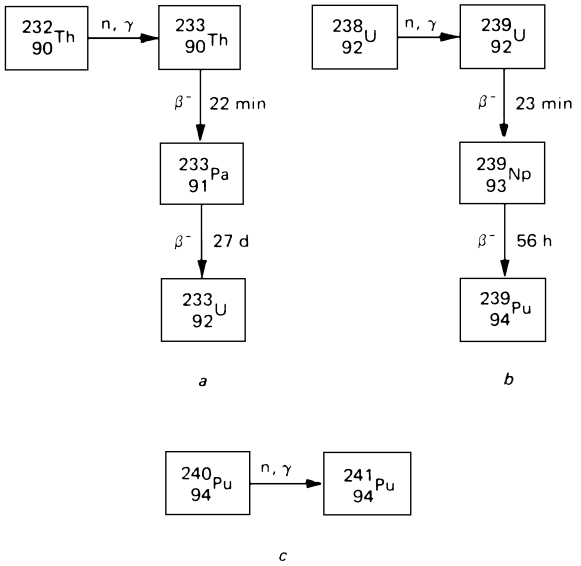

FIGURE 2 Chains for conversion of fertile nuclides to fissile nuclides: (1) ^{232}Th to ^{233}U, (b) ^{238}U to ^{239}Pu, and (c) ^{240}Pu to ^{241}Pu. [From Knief, R. A. (1992). "Nuclear Engineering: Theory and Practice of Commercial Nuclear Power," 2nd ed., Taylor & Francis/Hemisphere, New York.]

The number of neutrons from fission depends on the identity of the fissionable nuclide and the energy of the incident neutron. The parameter ν is the average number of neutrons emitted per fission. Fission neutrons exhibit a range of energies described by a normalized spectrum function $\chi(E)$, which may be approximated by

$$\chi(E) = 0.453e^{-1.036E} \sinh \sqrt{2.29E}. \qquad (10)$$

Evaluation of Eq. (10) shows that the most probable neutron energy is about 0.7 MeV, the average energy is about 2.0 MeV, and few neutrons have energies below about 0.1 MeV (a value many orders of magnitude greater than the 0.025 eV average energy of so-called "thermal" neutrons).

A typical fission produces nearly 200 MeV of energy (compared to 2–3 eV from combustion of each carbon atom with oxygen). The energy converted to heat in a nuclear reactor is divided roughly as shown in Table I.

TABLE I Representative Distribution of Fission-Related Energy

Energy source	Heat produced	
	MeV	Percent of total
Fission fragments	168	84
Neutrons	5	2.5
Prompt gamma rays	7	3.5
Delayed radiations		
Beta particles	8	4
Gamma rays	7	3.5
Radiative capture gammas	5	2.5
	200	100

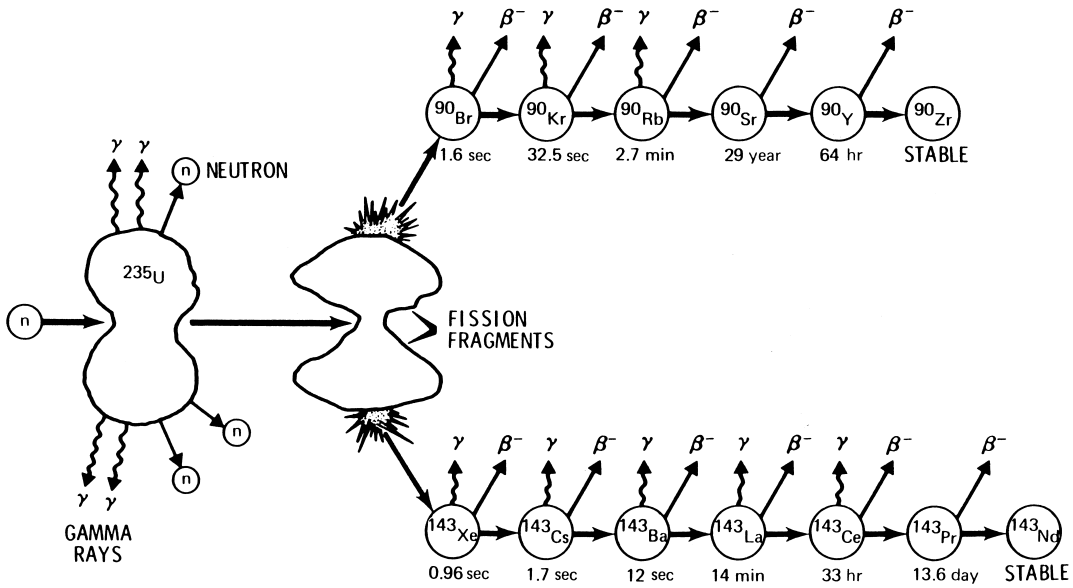

FIGURE 3 Two representative fission-product decay chains (from different fissions). [From Knief, R. A. (1992). "Nuclear Engineering: Theory and Practice of Commercial Nuclear Power," 2nd ed., Taylor & Francis/Hemisphere, New York.]

The delayed radiations, accounting for about 7.5% of the total energy, result in a long-term source of radiation and of heat energy, which decays away as roughly the one-fifth power of the initial level.

On a macroscopic scale 3.1×10^{10} fission/sec $\approx$1 W or fission energy production $\approx$1 MW $\cdot$ d/g fissile. Since the latter is an ideal value, real systems will expend somewhat more fuel for given energy production.

C. Reaction Rates

The power output of a reactor is proportional to the fission rate. However, the rates of all reactions that produce or remove neutrons determine the overall efficiency with which fissile and fertile materials are employed. The ability to calculate such reaction rates is a keystone to design and operation of nuclear systems.

When an individual compound nucleus has more than one mode for de-excitation, it is not possible to predict which reaction will occur. The relative probability for each outcome, however, can be determined, often through a combination of theory and experimental data.

Reaction rates are generally quantified in terms of two parameters—a macroscopic cross section describing the bulk characteristics of the material and a flux characterizing the neutron population. The particular formulation is based on the historical development of nuclear physics and reactor theory.

The concept of a nuclear cross section σ was first introduced with the idea that reaction probability should be proportional to the size of the target nucleus. This led to the formulation

$$\text{Interaction probability} = n\sigma\, dx \tag{11}$$

for a neutron traveling a distance dx in material of nuclide or atom density n. When it was determined that interaction probability may vary dramatically with neutron energy, the concept of area was dropped and the definition of cross section modified to

$$\sigma = \text{interaction probability}/n\, dx, \tag{12}$$

stating that it is the interaction probability per unit nuclide density per unit distance of neutron travel.

More precisely, the microscopic cross section $\sigma_r^j(E)$ relates to a particular nuclide j, reaction type r, and neutron energy E. Based on typical magnitudes, the unit 1 barn $= 10^{-24}$ cm^2 was developed (from the tongue-in-cheek observation that the area was "as big as a barn door").

Major reaction types include:

1. scattering: sum of elastic and inelastic scattering
2. fission
3. capture: nonfission, nonscattering events in which a neutron is the projectile particle
4. absorption: sum of fission and capture
5. total: sum of scattering and absorption

An example of the complex energy dependence exhibited by certain neutron reactions is illustrated in Fig. 4 with a

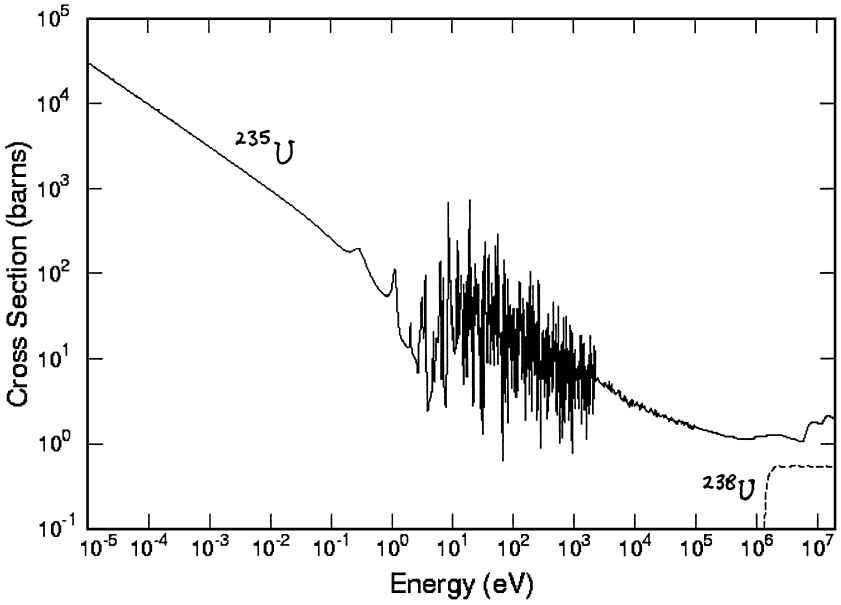

FIGURE 4 Microscopic fission cross sections for ^{235}U and ^{238}U as a function of incident neutron energy. [Courtesy of Los Alamos National Laboratory, (http://t2.lan1.gov/data/ndviewer.htm1)].

plot of the microscopic fission cross section for ^{235}U. For energies below 1 eV, the cross section varies inversely with the square root of the incident neutron's kinetic energy (or, equivalently, inversely with the incident neutron's speed, a "one-over-v" dependence). Neutron radiative capture also exhibits such "one-over-v" behavior.

The sharp "resonance peaks" in Fig. 4 occur when incoming neutron energies closely match "quantum energy levels," which result in particularly stable nuclear configurations. Radiative-capture and scattering cross sections also exhibit such resonance behavior.

Figure 4 also illustrates the distinction between fissile and fertile nuclides as addressed previously in Section II.B. Fissile ^{235}U not only fissions with neutrons of all energies, it fissions preferentially with the low-energy "thermal" neutrons (in the one-over-v region). This latter characteristic may be exploited by slowing down high-energy fission neutrons with low-mass constituents, such as water or graphite (as explained in Section III.A.1). Again, as illustrated in Fig. 4, the fissionable, but non-fissile, ^{238}U has a fission cross section that is always less than that of ^{235}U and has an appreciable value only for high-energy neutrons in excess (i.e., above a threshold) of 1 MeV.

The macroscopic cross section Σ is defined as

$$\Sigma = n\sigma \tag{13}$$

(even though the quantity is actually a probability per unit distance of neutron travel and might more appropriately be called a "linear attenuation coefficient"). This formulation allows the effects of various nuclides and reactions to be combined (e.g., for all interactions within a mixture according to

$$\Sigma_t^{\text{mix}} = \sum_{\text{all } j} \sum_{\text{all } r} \Sigma_r^j = \sum_{\text{all } j} \sum_{\text{all } r} n^j \sigma_r^j \tag{14}$$

summing over reactions r and constituents j).

The neutron population is described in terms of a scalar neutron flux Φ defined as

$$\Phi = Nv, \tag{15}$$

for neutron density N and speed v. The definition applies to neutrons of a single energy (speed) or a distribution of energies (e.g., the multigroup formulation described later). For the special case of a parallel beam perpendicular to a flat surface, the flux is just the number of neutrons crossing the surface per unit area per unit time.

Combining the previous definitions, the reaction rate can be described by

$$\text{Reaction rate} = \Sigma\Phi\, dV, \tag{16}$$

for macroscopic cross section Σ, flux Φ, and (incremental) volume dV. Rearranging terms

$$\text{Reaction rate per unit volume} = \Sigma\Phi \tag{17}$$

where the volume dV is now unspecified.

III. REACTOR PHYSICS

The physics employed in reactor analysis distinguishes between steady-state and time-dependent regimes referred to as statics and kinetics, respectively. Long-term changes can often be treated with quasi-static methods. Thermal-hydraulic interactions are also important. Each of these components is described separately below with their integration considered at the end of the section.

In a reactor, the neutron population may be described by

$$\begin{pmatrix}\text{Rate of increase}\\ \text{in the number}\\ \text{of neutrons}\end{pmatrix} = \begin{pmatrix}\text{rate of}\\ \text{production}\\ \text{of neutrons}\end{pmatrix} - \begin{pmatrix}\text{rate of}\\ \text{absorption}\\ \text{of neutrons}\end{pmatrix} - \begin{pmatrix}\text{rate of}\\ \text{leakage}\\ \text{of neutrons}\end{pmatrix} \tag{18}$$

$$\text{Accumulation} = \text{production} - \text{absorption} - \text{leakage}$$

$$\text{Accumulation} = \text{production} - \text{losses}.$$

This neutron balance equation represents the fact that neutrons must be conserved (i.e., neither created or destroyed).

When production and losses balance at a non-zero level, the fission chain reaction is just self-sustaining and the system is said to be critical. Criticality may occur at any fission rate so long as the neutron level is steady.

Systems in which production exceeds losses are supercritical and have increasing power levels. Subcritical systems have neutron losses greater than production and, therefore, decrease in power until and including a shutdown condition.

Power reactors are designed to be critical for steady power production, supercritical for increasing power level, and subcritical for decreasing power level or shutdown. Fuel outside of reactors, by contrast, must be maintained subcritical at all times.

A. Statics

A critical neutron chain reaction results in a steady-state or static system. Major features may be examined by first considering an infinite system (i.e., one without neutron leakage) and then extending to the more realistic situation.

1. Infinite Systems

The idealized concept of an infinite system with homogeneous properties is useful in that spatial variations do not exist since neutrons do not leak and the material is exactly the same in each location. Such a system which is also critical will have a steady neutron level and should not experience temperature or other changes. (The depletion and production effects of the nuclear reactions are ignored for now to be considered later.)

For the idealized infinite system, the neutron balance [Eq. (18)] reduces to

$$\text{Production} = \text{absorption}, \tag{19}$$

implying that every fission neutron is eventually absorbed. Using expressions for reaction rates (per unit volume)

$$\nu \Sigma_f \Phi = \Sigma_a \Phi, \tag{20}$$

where the fission rate is the product of the average number of neutrons per fission ν, the fission cross section Σ_f, and the neutron flux Φ and the absorption rate is the product of the absorption cross section Σ_a and the flux Φ. [The expression in Eq. (20) applies directly to the idealized situation of single-energy neutrons and with averaging to a multienergy neutron system.]

The general balance between production and absorption may be characterized by the infinite multiplication factor k_∞ (pronounced kay-infinity) defined as

$$k_\infty = \nu \Sigma_f / \Sigma_a. \tag{21}$$

Since in the time sequence, neutrons from one fission "generation" are absorbed, cause fission, and give rise to the next generation, k_∞ is a measure of the multiplication between neutron generations. A critical system, in balancing production and absorption, has multiplication of unity; supercritical implies multiplication in excess of unity, subcritical less than unity.

The simple form of Eqs. (20) and (21) are deceptive since the macroscopic cross sections have complex energy dependence (e.g., Fig. 4) and since they, in turn, determine the neutron flux (as described more fully later). Of particular importance in this regard is the effect of nonfissionable constituents which slow down or moderate the neutrons to the benefit or detriment of the chain reaction.

The relative probability of fission in a fissile nucleus tends to increase substantially with decreasing neutron energy (e.g., for ^{235}U as shown by the cross section plot in Fig. 4). Thus, the high-energy or fast neutrons produced from the fission reaction are less effective in causing future fissions than are neutrons of reduced energy (i.e., slow neutrons including those in thermal equilibrium with their surroundings).

Each scattering collision with a nucleus results in some energy loss for a fast neutron. If the nucleus has a large mass, the average energy loss for the neutron will be small (just as a billiard ball loses little energy in bouncing off a table "bumper," even though it may experience a major change in direction). A light nucleus, however, especially hydrogen with roughly the same mass as the neutron, may take most of the collision energy from the neutron (as a "cue ball" can lose essentially all of its energy in a head-on collision with another ball). Since a given energy decrease requires more scattering collisions the higher the mass of the target nuclide, thermal reactors use moderating materials like water, heavy water, or graphite; while a fast reactor may use a relatively heavy coolant like liquid sodium.

Infinite thermal neutron systems, which rely on substantial neutron slowing down, can be described and calculated roughly by a method known as the four-factor formula where

$$k_\infty = pf\eta\varepsilon. \tag{22}$$

The resonance escape probability p, the ratio of thermal-neutron absorption to that for neutrons of all energies, is a measure of the likelihood that the fast neutron from fission will not be absorbed (principally in the large, sharp resonances such as shown on Fig. 4) while slowing down. The thermal utilization factor f is the fraction of the total thermal-neutron absorption that occurs in fissionable nuclides. The thermal factor η is the average number of neutrons produced per thermal neutron absorbed in fissionable material (equivalent to $\nu\sigma_f/\sigma_a$ for the thermal neutrons only). The fast fission factor ε is the ratio of fissions caused by neutrons of all energies (fast plus thermal) to those caused by thermal neutrons. These seemingly disjointed definitions are of use primarily since, according to Eq. (22), their product is k_∞. From a practical standpoint, η and f can be estimated from cross-section data and a knowledge of the energy distribution for thermal neutrons. Factors ε and p can be estimated from experimental data.

The four-factor formula is also useful in describing the difference in behavior between uniformly distributed and lumped fissionable material in moderator. Natural uranium (0.7% ^{235}U, 99.3% ^{238}U), for example, cannot be made critical if mixed uniformly in graphite. This occurs with a resonance escape probability p that is too low because fission neutrons are likely to be absorbed by the ^{238}U resonances before they have a chance to be slowed to thermal energies by the graphite. If the fuel is instead installed in "lumps," such that neutrons leaving the fuel are likely to have numerous collisions in the graphite before reentering fuel, p can be large enough to allow the system to be critical. The same principle applies to slightly enriched uranium (2–4 wt. % ^{235}U) in water-moderated reactors and other low fissile compositions.

2. Finite Systems

Although the abstraction of an infinite system is useful for eliminating spatial dependencies in preliminary calculations, it is recognized that all real systems have finite dimensions and experience neutron leakage. Leakage may be accommodated by defining an effective multiplication factor k_{eff} as

$$k_{\text{eff}} = k = \frac{\text{neutron production}}{\text{neutron losses}} \tag{23}$$

or

$$k = \frac{\text{production}}{\text{absorption} + \text{leakage}},$$

where common practice is to drop the subscript "eff" and refer to the factor merely as k. (Unfortunately, leakage is not as easily expressed mathematically as the other terms, so its formulation is deferred until later in this section.) Rearranging terms in Eq. (23) establishes a relationship between k and k_∞ [Eq. (21)] for a critical system as

$$k = 1 = k_\infty^c \big/ [1 + (\text{leakage/absorption})], \tag{24}$$

showing that "extra" multiplication equal to the ratio of leakage to absorption must be added to compensate for the leakage effect in maintaining criticality.

Criticality of a finite system is determined by comparing its k-effective value to

1. $k = 1$: critical
2. $k > 1$: supercritical
3. $k < 1$: subcritical.

According to Eq. (23), adjustments to multiplication may be made through production, absorption, leakage, or a combination. (Recall that reactors must achieve all three states of criticality, while ex-reactor fuel is to be always subcritical.) Production is based primarily on the amount of fissile material. Absorption occurs in fissile and other fissionable compositions, structural materials, and liquid and/or solids added specifically for their neutron absorbing, or poisoning, effects. Leakage depends on material density, system geometry, and the presence of external materials that can act as neutron reflectors. Due to the complex interactions among the terms, a change in one important characteristic, especially moderation, may result in subsequent changes in one or more of the terms.

3. Calculational Methods

The neutron population of any chain reacting system is difficult to model because of the essentially continuous variation in energy and direction. The variety of reactions, some with very complex cross sections (e.g., as shown by Fig. 4) and secondary neutron emissions, increases the difficulty.

The first calculational techniques were based on simplified models. Then, as digital computer technology evolved, successively more sophisticated methods have been developed and used.

a. Diffusion theory. The simplest representation of a finite system employs diffusion theory, in which neutrons are treated as if they diffuse like matter in a chemical system. Considering the neutrons as if they all have a single (or equivalently, an appropriately averaged) speed, leakage in a homogeneous medium can be approximated by Fick's law

$$\begin{aligned} \mathbf{J}(\mathbf{r}) &= -D\,\boldsymbol{\nabla}\Phi(\mathbf{r}) \\ \text{Leakage} &= \nabla\cdot\mathbf{J}(\mathbf{r}) = \boldsymbol{\nabla}\cdot(-D\,\boldsymbol{\nabla}\Phi(\mathbf{r})) \\ &= -D\,\nabla^2\Phi(\mathbf{r}) \end{aligned} \tag{25}$$

for current density $\mathbf{J}$, diffusion coefficient D, and neutron flux Φ. Using terms from Eqs. (20) and (25)

$$\begin{aligned} \text{production} &= \text{absorption} + \text{leakage} \\ \nu\Sigma_f\Phi(\mathbf{r}) &= \Sigma_a\Phi(\mathbf{r}) - D\,\nabla^2\Phi(\mathbf{r}) \end{aligned} \tag{26}$$

and

$$\begin{aligned} &\nabla^2\Phi(\mathbf{r}) + [(\nu\Sigma_f - \Sigma_a)/D]\Phi(\mathbf{r}) \\ &\quad = \nabla^2\Phi(\mathbf{r}) + B_m^2\Phi(\mathbf{r}) = 0, \end{aligned} \tag{27}$$

where the material buckling B_m^2 has been defined as

$$B_m^2 = (\nu\Sigma_f - \Sigma_a)/D$$

Although general solutions to Eq. (26) are somewhat difficult to construct, it may be recognized that a critical system should have a flux that is stable, everywhere positive, and zero at the external boundaries of the material system. These conditions lead to neutron flux solutions shown in Table II for homogeneous material in five simple geometries.

A finite critical system must have $\nu\Sigma_f > \Sigma_a$ to be able to accommodate some leakage. This ensures that $B_m^2 > 0$ and that Eq. (26) has oscillating (rather than decaying) solutions. The requirement that flux be nonzero allows only one-half cycle of the function and, thereby, limits the value of B_m^2 to the value that allows the function to "fit" the geometry. The result is the "cosine-like" flux shapes and geometric buckling B_g^2 values shown in Table II.

The bucklings must both satisfy the equation for the system to be critical (i.e., $B_m^2 = B_g^2$). If B_m^2 is the greater, the material properties overpower the geometry, resulting

TABLE II Diffusion Theory Fluxes and Bucklings for Bare Critical Systems of Uniform Composition

Geometry	Dimensions	Normalized flux $\frac{\Phi(r)}{\Phi(0)}$	Geometric buckling B^2
Sphere	r-Radius R	$\frac{1}{r}\sin\left(\frac{\pi r}{R}\right)$	$\left(\frac{\pi}{R}\right)^2$
Cylinder	r-Radius R z-Height H^a	$J_0\left(\frac{2.405r}{R}\right)\cos\left(\frac{\pi z}{H}\right)$	$\left(\frac{2.405}{R}\right)^2+\left(\frac{\pi^2}{H}\right.$
Rectangular parallelepiped	x-Length A^a y-Width B^a z-Height C^a	$\cos\left(\frac{\pi x}{A}\right)\cos\left(\frac{\pi y}{B}\right)\cos\left(\frac{\pi z}{C}\right)$	$\left(\frac{\pi}{A}\right)^2+\left(\frac{\pi}{B}\right)^2+\left(\frac{\pi}{C}\right)^2$

[a] Centered about $x=y=z=0$ and extending to $z=\pm H/2$, etc.

in a supercritical system. Conversely, a larger B_g^2 implies excessive leakage and a subcritical configuration. Rearranging Eq. (27) shows that

$$B^2 = -\nabla^2\Phi/\Phi, \tag{28}$$

whose mathematical consequence is that B^2 is the "curvature" of the flux, or the amount that the (constant) flux of an infinite system must be bent or "buckled" to accommodate the leakage (and external boundary conditions) of a finite system.

Combining Eqs. (26) and (27)

$$\nu\Sigma_f\Phi(\mathrm{r}) = \Sigma_a\Phi(\mathrm{r}) + DB^2\Phi(\mathrm{r}), \tag{29}$$

which for a critical system may be rearranged with the definition of k [Eq. (23)] to

$$k = 1 = \nu\Sigma_f\big/\left(DB^2+\Sigma_a\right), \tag{30}$$

or by inserting the definition of k_∞ [Eq. (21)]

$$k = 1 = \frac{k_\infty}{DB^2\big/\Sigma_a + 1}$$

and

$$k_\infty = 1 + \left(DB^2\big/\Sigma_a\right). \tag{31}$$

The last term on the right-hand side of Eq. (31) is a measure of the excess multiplication required to compensate for leakage in a finite system.

A different formulation relates the infinite and effective multiplication factors through a nonleakage probability P_{nl}, the probability that neutrons will not leak from the system. Historically, the nonleakage probability was split into two components—one each for fast and thermal neutrons. The fast nonleakage probability P_{fnl} is expressed as

$$P_{\mathrm{fnl}} = e^{-B^2\tau}, \tag{32}$$

for Fermi age τ, which is an approximate measure of the mean square distance traveled by a neutron in slowing down from fission energy to thermal energy. The thermal nonleakage probability P_{tnl} is

$$P_{\mathrm{tnl}} = 1/(1+L^2B^2), \tag{33}$$

for thermal diffusion length L, which is an approximate measure of the root mean square distance traveled by a neutron while it is thermal. Since τ and L can be determined from experimental data and/or calculations, they allow for the useful expansion of the four-factor formula [Eq. (22)] to the six-factor formula

$$k = k_\infty P_{\mathrm{fnl}} P_{\mathrm{tnl}} = \varepsilon p\eta f P_{\mathrm{fnl}} P_{\mathrm{tnl}}. \tag{34}$$

An approximation for large systems is

$$k = \frac{k_\infty e^{-B^2\tau}}{1+L^2B^2} \approx \frac{k_\infty}{1+(L^2+\tau)B^2} = \frac{k_\infty}{1+M^2B^2}, \tag{35}$$

for migration area M^2.

b. Transport theory. A more complete description of the neutron chain reaction requires specification of not only general neutron flow, but of neutron energies and directions. A full model needs seven variables for:

1. position in space **r** (a vector quantity requiring three coordinates, e.g., x, y, and z or r, θ, and ϕ for rectangular and cylindrical systems, respectively)
2. velocity **v** (a vector quantity requiring three coordinates) usually split between energy $E(=\frac{1}{2}mv^2)$ and direction Ω (consisting of components θ and ϕ)
3. time t

The Boltzmann neutron transport equation (of which the diffusion theory approximation may be considered a

subset) for the multivariable flux $\Phi(\mathrm{r}, E, \Omega, t)$ may be written as:

$$\begin{aligned}\frac{1}{v(E)}\frac{d\Phi(\mathbf{r},E,\Omega,t)}{dt}^{①} &= -\Omega\cdot\nabla\Phi(\mathbf{r},E,\Omega,t)^{②} \\ &\quad -\Sigma_t(\mathbf{r},E,\Omega)\Phi(\mathbf{r},E,\Omega,t)^{③} \\ &\quad +\chi(E)\int_{E'}\int_{\Omega'}[\nu\Sigma_f(\mathbf{r},E',\Omega') \\ &\quad \times\Phi(\mathbf{r},E',\Omega',t)\,d\Omega'\,dE'\}^{④} \\ &\quad +\int_{E'}\int_{\Omega'}[E_s(\mathbf{r};\Omega'\to\Omega;E'\to E) \\ &\quad \times\Phi(\mathbf{r},E',\Omega',t)\,d\Omega'\,dE']^{⑤}, \end{aligned} \tag{36}$$

where each term represents a rate (per unit parameter) involving neutrons with the specified coordinates. Terms 1 and 2 are the net rate of neutron accumulation and the leakage, respectively. The third term is the total interaction rate or the rate of removal of neutrons due to absorption and scattering interactions (since the latter "out-scatters" result in at least some change in neutron energy and direction).

The last two terms in Eq. (36) represent the production phenomena where neutrons at arbitrary energy E' and direction Ω' react with nuclei to produce those at reference energy E and direction Ω. The integrals sum over all initial energies and directions. Specifically, the double integral in term 4 yields the total fission rate; and its product with the neutron spectrum function $\chi(E)$ represents the fission-neutron energy distribution. (It may be recalled, for instance, that all fission neutrons are fast while in some reactors almost all fissions are caused by thermal neutrons).

The last term in Eq. (36) is based on differential scattering of neutrons from initial energy E' to final energy E and from initial direction Ω' to final direction Ω. The cross section $\Sigma_s(\mathrm{r};E'\to E;\Omega'\to\Omega)$ accounts for the relative probabilities of all possible changes (recalling, for example, that fast neutrons can only lose energy in scattering collisions with stationary nuclei). This "in-scatter" term is the only source of neutrons at energies below the fission-neutron range, including the "slow" neutrons upon which thermal reactor designs are based.

The complex energy dependence of the reaction cross sections (e.g., as shown on Fig. 4) precludes closed form solution of Eq. (36). One solution approach begins by obtaining approximate fluxes and reaction cross sections by averaging over one or more parameters. The continuous energy dependence of the flux $\Phi(E)$, for example, may be divided into intervals or "groups" according to

$$\Phi_{\Delta E} = \int_{\Delta E}\Phi(E)\,dE \tag{37}$$

and the cross section developed as

$$\Sigma_{r\Delta E} = \int_{\Delta E}\Sigma_r(E)\Phi(E)\,dE \Big/ \int_{\Delta E}\Phi(E)\,dE, \tag{38}$$

for (energy-dependent) flux Φ, cross section Σ_r for (arbitrary) reaction r, and energy interval ΔE corresponding to group g. Multiplying Eqs. (37) and (38) shows that the formulation preserves the product of flux and cross section as the reaction rate. Cross sections in the form of Eq. (38) are said to be flux-averaged or flux-weighted.

For the special case where leakage can be approximated by diffusion theory [Eq. (29)], the multigroup approximation [Eqs. (37) and (38), with the latter also applying to diffusion coefficient D] to the Boltzmann transport equation results in the expression

$$\begin{aligned}-\nabla\cdot D_g\nabla\phi_g + \Sigma_{tg}\phi_g \\ = \frac{1}{k}\chi_g\sum_{g'=1}^{G}\nu\Sigma_{fg'}\phi_{g'} + \sum_{g'=1}^{G}\Sigma_{g'\to g}\phi_{g'}\end{aligned} \tag{39}$$

for each of G groups where summations replace the integrals, the $\Sigma_{g'\to g}$ are cross sections for scattering from group g' to group g, and the other symbols represent group formulations of previously defined functions and parameters.

It must be recognized that the formulation represented by Eqs. (37)–(39) still requires knowledge of the interrelated neutron flux and the reaction cross sections. An advantage is realized only when good first approximations are available and iterative procedures can be used to refine successively the results. In general, the finer the group structure divisions (i.e., the larger the number of groups), the better the approximation.

The diffusion theory approximation for neutron leakage assumes homogeneous, or at least smooth, variation of material properties. Thus, application to the heterogeneous geometries typical of reactors requires more sophisticated methods for complete calculations or, at least, to determine "effective" parameters that allow Eq. (39) to provide accurate answers.

Better approximations to Eq. (36) may be obtained by employing a transport theory method which adds explicit representation of the directional dependence of the neutron flux. The discrete ordinates method divides these directions into discrete "groups" analogous to the energy representation. The Monte Carlo method is capable of modeling both energy and direction in discrete groups or with essentially continuous variation.

The Monte Carlo approach tracks individual idealized neutron paths one collision at a time based on cross sections and random number generation. The random numbers are used with nuclear data to predict reaction types, directions of post-reaction neutron scatter, and neutron energy loss. Multiplication is calculated as the ratio of neutrons produced to neutrons lost [i.e., consistent with the definition in Eq. (23)].

B. Kinetics

The time-dependent behavior of a neutron chain reacting system depends on the balance

$$\text{Rate of Change} = \text{production} - \text{losses}, \tag{40}$$

where the principle production mechanism is fission and the losses are absorption and leakage. The fission source consists of prompt neutrons emitted at the time of fission and delayed neutrons that follow decay of certain fission product nuclei.

Prompt neutrons have a very short lifetime in a reactor system, on the order of 10^{-7} sec for a fast system and 10^{-4} sec for a thermal (e.g., water-moderated) system. Thus, even for a multiplication change as small as +0.1% above critical, the power could increase by a factor of more than 10,000 in one second. Fortunately the delayed neutrons are found to have a longer lifetime as measured from the time of fission to time of absorption for the next fission. Roughly 20 fission product nuclei are observed to emit neutrons following one beta decay. The longer lifetime is based on the half-lives of from a few tenths of a second to about a minute for the precursor nuclides. Designating β as the delayed neutron fraction

$$\text{Prompt source} = (1-\beta)\nu\Sigma_f\phi \tag{41}$$

and

$$\text{Delayed source} = \sum_{i=1}^{6} \lambda_i C_i(t), \tag{42}$$

for decay constant λ_i [$=\ln 2/(T_{1/2})_i$], and time-dependent precursor concentration $C_i(t)$. The $C_i(t)$ terms depend on the balance

$$dC_i(t)/dt = \beta_i \nu\Sigma_f\Phi(t) - \lambda_i C_i(t), \tag{43}$$

for fraction β_i associated with the ith precursor and for fission rate $\nu\Sigma_f\Phi$. Values of β range from 0.0021 for ^{239}Pu to 0.0065 for ^{235}U.

1. Point Kinetics

The kinetic behavior of neutron chain reacting systems is often most easily studied by use of a point model (i.e., one with the spatial dependence ignored or, better, averaged out). The energy dependence of the flux may also be averaged.

Reactivity ρ is defined as

$$\rho = (k-1)/k = \Delta k/k, \tag{44}$$

for effective multiplication factor k. Examination of this quantity shows it to be the fractional change in multiplication from the critical condition $k = 1$. Thus, reactivity is zero for a critical system, positive for supercritical, and negative for subcritical. A prompt neutron lifetime l^* may also be determined consisting of two parts—slowing down lifetime of 10^{-7} sec and, for well-moderated systems, a thermal lifetime of 10^{-4} sec.

Employing these definitions with information from Eqs. (41)–(44), the neutron balance equations can be converted into the point kinetics equations for neutron density $N(t)$ and concentration $C_i(t)$ for the ith precursor

$$\begin{aligned} dN(t)/dt &= [(\rho-\beta)/l^*]N(t) + \sum_{i=l}^{6} \lambda_i C_i(t) \\ dC_i(t)/dt &= (\beta_i/l^*)N(t) - \lambda_i C_i(t) \\ i &= 1, 2, \ldots, 6, \end{aligned} \tag{45}$$

where the use of only six values for index i reflects a frequent convention of combining the effects of the actual precursor nuclides into six "effective" groups. The point kinetics formulation in Eq. (45) is complex in that it consists of seven coupled differential equations which are more readily solved by computer than analytical methods.

One consequence of the presence of prompt and several groups of delayed neutrons is shown on Fig. 5, which represents system response to "step" (i.e., instantaneous) reactivity changes in an initially critical system based on thermal neutron fission of ^{235}U. The rapid increase in power following a step reactivity insertion is called a prompt jump and results from the change in multiplication and the inflow of prompt neutrons. For $\rho < \beta$, the neutron increase is not sustained as the system must wait on the delayed neutrons for its supercritical configuration; thus, a stable or asymptotic period (a straight line on this logarithmic power scale) plot is established whose magnitude depends on the size of the initial insertion. For $\rho = \beta$, the system is critical without any prompt neutrons and, thus, is said to be *prompt critical*. The curve for +1.0% $\Delta k/k$ on Fig. 5 represents a prompt supercritical condition.

A negative reactivity insertion is characterized by a prompt drop, due to the instantaneous decrease in prompt neutrons, and by an asymptotic decay period as the delayed neutron effects come in. For very large negative changes (e.g., −5.0% in Fig. 5), the asymptotic period is roughly that for decay of the longest lived precursor nuclide.

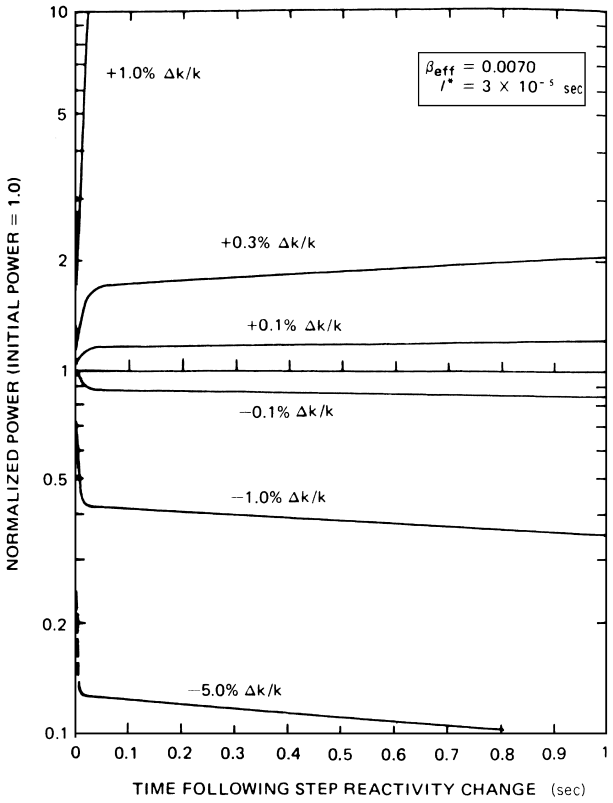

FIGURE 5 Time-dependent power behavior following various reactivity changes in a typical water-moderated reactor using slightly enriched uranium. [From Knief, R. A. (1992). "Nuclear Engineering: Theory and Practice of Commercial Nuclear Power," 2nd ed., Taylor & Francis/Hemisphere, New York.]

2. Feedback and Control

The behavior shown in Fig. 5 is characteristic of a reactor at a low power level where temperatures and related parameters do not change enough to vary the reactivity increment that started the process. As temperatures increase, for example, several changes occur that affect absorption in the fuel and neutron slowing down in the moderator. When such changes tend to enhance themselves with time (e.g., power increase raises temperatures which in turn causes a further power increase), a positive or divergent feedback condition is said to exist. Negative or convergent feedback produces a more stabilizing effect (e.g., with increased temperature leading to multiplication and power decrease).

One important feedback mechanism for reactors using low enrichment uranium fuel is Doppler broadening of the absorption resonance peaks in ^{238}U (shown in Fig. 4). As fuel temperature increases, thermal motion of the ^{238}U nuclei allows them to capture increasingly large numbers of neutrons thereby increasing the absorption term in the neutron balance [e.g., Eq. (23)], or equivalently decreasing the resonance escape probability p in the four-factor formula [Eq. (22)]. Since for this process a power increase reduces the multiplication factor (and, thus, reactivity), the feedback effect is negative.

Another negative feedback relates to fuel density. When a reactor uses metal fuel, increased temperature causes expansion and a decrease in density with the net effect of increasing leakage and again reducing the multiplication factor.

Temperature changes in well-moderated systems can result in either positive or negative reactivity feedback. The tradeoff between neutron slowing down and absorption in the moderator is the key element. With water, for example, an undermoderated system has too little water to fully thermalize neutrons and produce the maximum fission rate from the fuel. If such a system is heated, the density will decrease and its moderating ability will be further reduced and multiplication will fall giving a negative feedback. An overmoderated system, having too much water, will become more reactive with decreasing density and, thus, respond with positive feedback to a temperature change. (This latter circumstance cannot last indefinately, however, as progressive density decrease will ultimately cause the system to be undermoderated.)

Fuel and coolant effects combine to cause reactivity changes as reactor power level increases. It is particularly convenient to describe average effects in terms of a power coefficient of reactivity α_P defined as

$$\alpha_P = \frac{\partial \rho}{\partial P} = \frac{\partial \rho}{\partial T_f}\frac{dT_f}{dP} + \frac{\partial \rho}{\partial T_m}\frac{dT_m}{dP}$$

$$= \alpha_f \frac{dT_f}{dP} + \alpha_m \frac{dT_m}{dP}, \tag{46}$$

for power P and temperatures T_f and T_m of the fuel and moderator, respectively.

Figure 6 is a reactivity feedback diagram that is helpful in describing general kinetic behavior. For example, a positive reactivity insertion ρ_{ext} produces a power increase as determined by the point kinetics Eqs. (45). The output power changes system temperatures and densities resulting in a feedback reactivity ρ_F. The initial and feedback

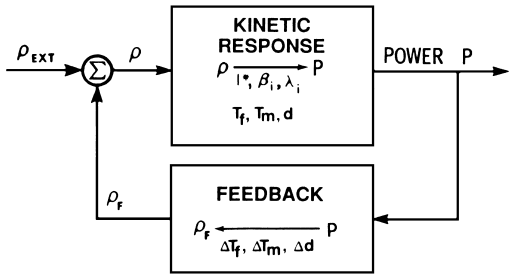

FIGURE 6 Reactivity diagram.

reactivities combine at the summation point for a new net reactivity which returns a new power level. If the feedback is negative (i.e., the initiating and feedback reactivities have opposite signs) the cycle will continue until the power stabilizes with power level and temperatures above the starting values. If the feedback were positive, the power would continue to increase until the reactivity is removed (or the system disassembles itself, e.g., as occurred at Chernobyl Unit 4).

C. Depletion Effects

Time-dependent phenomena which occur long term are considered to be associated with fuel depletion since they are associated directly with the fission reactions or with reactions initiated by the neutrons from the fission chain reaction. The major contributors are burnup of fissile nuclides, formation of fission fragments and their products, and transmutation of heavy element nuclides to new forms.

Each nuclide in a reactor system obeys a balance equation of the form

$$\text{Net rate of production} = \text{rate of creation} - \text{rate of loss.}$$

Loss mechanisms are neutron absorption (recalling that every reaction of this type results in a new product nucleus) and radioactive decay. Production processes relate to nuclear reactions and radioactive decay of other nuclides. Physical movement of fuel or other constituents can give rise the additional production and loss terms.

1. Burnup

If there are no significant creation mechanism for a particular nuclide (e.g., for fissile ^{235}U), absorption is the only change mechanism. A balance for this depletion or burnup case is

$$dn(t)/dt = -n(t)\sigma_a\Phi(t), \tag{47}$$

for nuclide concentration n, absorption cross section σ_a, and flux Φ (ignoring here other possible time, energy, or spatial dependencies). For initial concentration n_0 and a constant flux Φ_0, Eq. (47) has the solution

$$n(t) = n_0 e^{-\sigma_a \phi_0 t}, \tag{48}$$

showing that the product of flux and time, also known as neutron fluence, is the characteristic parameter driving the depletion.

Another measure of burnup does not depend on any knowledge of cross sections or fluxes. It merely ratios the thermal energy to the mass of fuel to give MWD/T—megawatt days per metric ton of fuel.

2. Transmutation

All of the neutron absorption reactions in heavy elements that do not result in fission do lead to the production of new nuclide species through transmutation. These can, in turn, be transmuted or may undergo radioactive decay to produce still more species.

The production rate for any specific nuclide $^{A}_{Z}$X is based on a balance equation of the form

$$\begin{aligned}\begin{pmatrix}\text{Net rate of}\\ \text{production}\end{pmatrix} = &\begin{pmatrix}\text{rate of creation by } (n,\gamma)\\ \text{reactions in } {}^{A-1}_{Z}\text{X}\end{pmatrix}\\ &+\begin{pmatrix}\text{rate of creation by other}\\ \text{reactions } r \text{ in nuclides } j\end{pmatrix}\\ &+\begin{pmatrix}\text{rate of creation by}\\ \text{decay of nuclides } i\end{pmatrix}\\ &-\begin{pmatrix}\text{rate of loss}\\ \text{by absorption}\end{pmatrix}\\ &-\begin{pmatrix}\text{rate of loss by}\\ \text{radioactive decay}\end{pmatrix}\end{aligned} \tag{49}$$

$$\frac{dn(t)}{dt} = n^{A-1}\sigma_\gamma^{A-1}\Phi + \sum_{\text{all } j} n^j \sigma_r^j \Phi + \sum_{\text{all } i} n^i \lambda^i - n\sigma_a\Phi - n\lambda$$

for nuclide concentrations n, decay constants λ, microscopic cross sections σ, and neutron flux Φ.

The transmutation products which are fissile, fertile, or nonfission absorbers have the greatest effect on criticality. Some of the most important reactions are shown by Fig. 7. Other transmutation products are of concern as wastes in nuclear fuel cycle applications.

The neutron reactions which convert the fertile nuclides ^{232}Th, ^{238}U, and ^{240}Pu to fissile nuclides ^{233}U, ^{239}Pu, and ^{241}Pu, respectively, are among the most important. These are shown by Fig. 2. The ability of the reactor to produce new fissile material depends heavily on the number of "extra" neutrons (i.e., those not required to sustain the chain reaction).

The parameter η, the average number of neutrons produced per neutron absorbed in fuel [as defined for thermal neutrons in the four-factor formula of Eq. (22)], serves as a useful reference. Since one neutron is required for the chain reaction, $\eta - 1$ is an upper limit on the number of neutrons available for producting new fuel. Where $\eta > 2$, the possibility exists fro breeding or producing more fuel than is consumed in the chain reaction. The same process is called converting when less than one extra neutron is available. Details of the cross sections show that breeding is most favorable for thermal neutrons in ^{233}U/^{232}Th and for fast neutrons in plutonium (^{239}Pu and ^{241}Pu)/^{238}U.

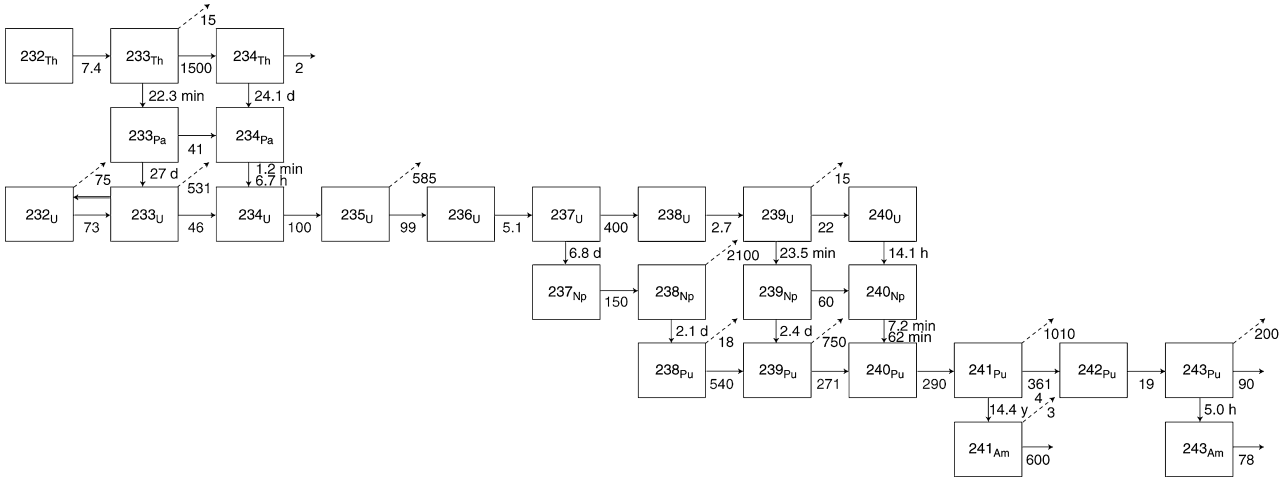

FIGURE 7 Neutron irradiation chains for heavy elements of interest for nuclear reactors. [Data from General Electric Co. and Knolls Atomic Power Laboratory (1996). "Chart of the Nuclides (Nuclides and Isotopes)," 15th ed., San Jose, CA.]

Fast neutrons can also breed in ^{232}Th/^{233}U systems. Fast and thermal systems with ^{235}U/^{238}U and thermal systems with plutonium/^{238}U are converters. Since ^{235}U is the only fissile nuclide that exists in nature, nuclear transmutation is the only means for obtaining the others.

The production (and in-place depletion) of plutonium isotopes from irradiation of slightly enriched uranium (97% ^{238}U and 3% ^{235}U) fuel is shown by Fig. 8. After the initial formation of ^{239}Pu, successive capture reactions produce the higher isotopes. The first three isotopes are important contributors to the production side of the neutron balance since two are fissile and the other is fertile. The ^{242}Pu isotope, on the other hand, is a parasitic absorber that at the end of the lifetime of fuel in a typical water-moderated reactor, requires about 2% extra reactivity to compensate; such nuclides are said to have reactivity penalties associated with them.

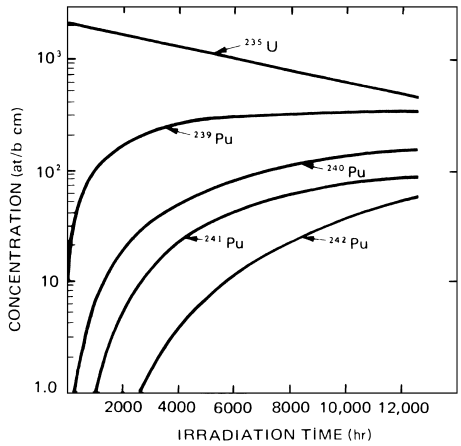

FIGURE 8 Buildup of plutonium isotopes with burnup of a typical LWR fuel composition. [From Knief, R. A. (1992). "Nuclear Engineering: Theory and Practice of Commercial Nuclear Power," 2nd ed., Taylor & Francis/Hemisphere, New York.]

Transmutation also gives rise to many of the long-lived radioactive waste products which must be disposed. Many of the nonfissionable nuclides shown on Fig. 7 fall into this category.

3. Fission Products

The other major products of fuel depletion come directly from the fission process. The initial fission fragments decay successively to the various fission products (e.g., as shown by Fig. 3).

The buildup of fission products can be described by a nuclide balance similar to that of Eq. (49)

$$\frac{dn(t)}{dt} = \gamma \Sigma_f \Phi + n^{A-1} \sigma_\gamma^{A-1} \Phi + \sum_{\text{all } j} n^j \sigma_r^j \Phi + \sum_{\text{all } i} n^i \lambda^i - n\sigma_a \Phi - n\lambda, \tag{50}$$

for fission yield γ—the average number of the nuclide produced per fission—and fission rate $\Sigma_f \Phi$. Since there are at least two fragments per fission, the sum of the yields is slightly greater than two.

Fission products affect the chain reaction primarily as parasitic absorbers. Although several of the products have large absorption cross sections, isotopes of samarium and xenon have the greatest impact on operation of thermal-neutron reactors. Fuel cycle and reactor operations are also affected by the fission products that constitute wastes with long-term radiation and heat sources.

Neodymium-149 beta decays to promethium-149, which in turn beta decays to samarium-149. The latter is a stable nuclide with a very large cross section for thermal neutrons. During operation, the concentration of ^{149}Sm is determined by the balance between production from ^{149}Pm decay and the loss through neutron absorption. A sizable equilibrium poisoning effect may be doubled after shutdown when absorption stops and the ^{149}Pm already in the system completes its decay.

Tellurium-135 beta decays to iodine-135 and xenon-135 in a manner similar to that which produces ^{149}Sm. However, the ^{135}Xe nuclide is itself beta-active and has a particulary large thermal absorption cross section. The operating xenon concentration depends on the balance of its decay and absorption losses with production from ^{135}I decay. A large equilibrium poisoning effect may increase significantly after shutdown since the ^{135}I decays more rapidly than the ^{135}Xe. Eventually, however, the ^{135}Xe will all decay away. The presence of ^{135}Xe also creates the possibility for power oscillations in a large reactor.

Fission products with short half lives are radiological concerns in routine reactor operations. Long half-life products affect reactor operations and eventually form the principle radioactive wastes of the nuclear fuel cycle.

D. Energy Removal

The critical neutron balance depends not only on fissionable materials and moderation, but also on the system temperatures and densities that affect their nuclear reaction properties. Thus, thermal-hydraulic and energy removal are extremely important characteristics.

Reactors are characterized by high power density and fuel that maintains its geometry throughout the useful lifetime. Thus, temperatures must be limited so that geometry changes up to and including melting do not occur. This translates to assuring that local conditions do not endanger the integrity of the core at any location. System limits are determined by maximum temperatures and/or coolant flow conditions rather than by the average values.

Thermal-hydraulic analysis requires detailed modeling of core power distributions including feedback effects. Correlation of local power densities to fuel-pin temperature distribution and coolant flow conditions provides the basis for establishing general operating limits for the system as a whole.

Since most fission energy is deposited very near the site of each fission event, the power density has essentially the same spatial distribution as the fission rate. The position-dependent power density $P(r)$ may be represented by

$$P(r) = E_f \Sigma_f(r)\Phi(r), \tag{51}$$

for energy per fission E_f and fission rate $\Sigma_f\Phi$.

A power peaking, or heat flux, factor F_Q is then defined as

$$F_Q(r) = \frac{P(r)}{\langle P(r)\rangle} = \frac{q'''(r)}{\langle q'''(r)\rangle} = \frac{q'(r)}{\langle q'(r)\rangle}, \tag{52}$$

where q''' is the volumetric heat rate (alternative representation of the power density) and q' is the linear heat rate (power per unit length of fuel); $\langle P(r)\rangle$, $\langle q'''\rangle$, and $\langle q'\rangle$ are the spatially averaged power density, volumetric heat rate, and linear heat rate, respectively, for the system as a whole. Comparing detailed temperature distributions for fuel pin conduction, including peak values for each type of material constituent, allows limiting peaking factors to be determined.

A second peaking factor is concerned with the enthalpy H (or heat energy) content of liquid coolant as it flows by forced convection through channels among the fuel pins. The enthalpy rise factor $F_{\Delta H}$ is defined as

$$F_{\Delta H}(r) = \frac{\text{enthalpy rise in the channel at r}}{\text{enthalpy rise in the core-average channel}}, \tag{53}$$

where the enthalpy increase depends on the average heat flux from the surrounding fuel pins and on the identity, pressure, temperature, and heat capacity of the liquid coolant. This time detailed calculations of fuel-channel temperatures and flow conditions are used to set limits that will prevent loss of cooling capability (e.g., through departure from nucleate boiling [DNB] where a steam blanket insulates the fuel from the water coolant thereby restricting energy transport.)

The self-generated heat source from fihn gives rise to an energy density profile which would be "cosine-like" both radially and axially. As shown by Table II, this would actually be Bessel-function shaped radially and cosin-shaped axially for a uniformly fueled cylindrical core.

Each fuel pin also has its own radial temperature distribution $T(r)$ which for a cylindrical fuel pellet region may be approximated by

$$T(r) = T(r_0) + \frac{q'''}{4k_f}\left(r_0^2 - r^2\right), \quad 0 < r < r_0, \tag{54}$$

for uniform volumetric heat rate q [$E_f\Sigma_f\Phi$ from Eq. (51)], thermal conductivity k_f, and pellet fuel outer radius r_0. The subsequent heat transfer through the cladding and into the coolant determines the maximum center-line temperature (e.g., as shown by Fig. 9). The peak fuel and cladding temperatures for routine operations and potential transient or accident conditions are important determinants of peaking factor limits [e.g., Eq. (52)].

The axial temperature profile depends on both the volumetric heat rate in the fuel (e.g., cosine-shaped axial profile for a cylindrical core) and the temperature rise in the

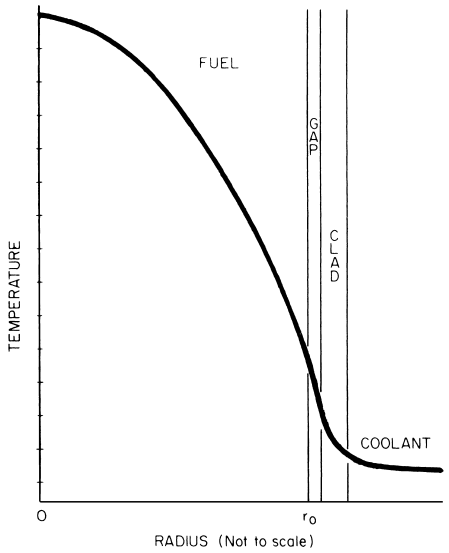

FIGURE 9 Typical radial temperature distribution across a fuel pin in a light water reactor.

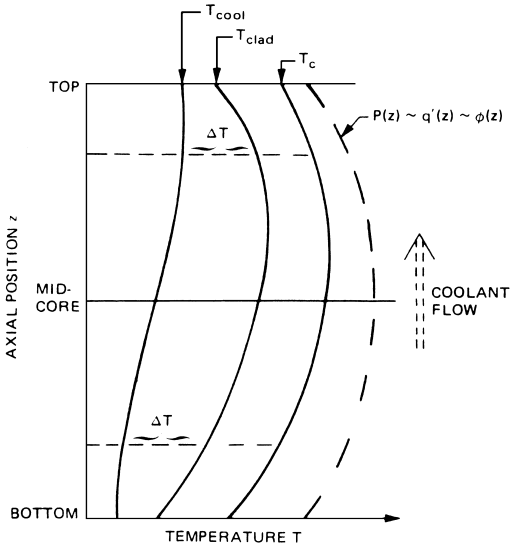

FIGURE 10 Typical axial temperature distributions in coolant, on clad surface, and at fuel-pin center line with a cosine-shaped neutron flux in a light water reactor. [From Knief, R. A. (1992). "Nuclear Engineering: Theory and Practice of Commercial Nuclear Power," 2nd ed., Taylor & Francis/Hemisphere, New York.]

coolant as it flows from the inlet to the outlet. For such a cosine flux, the fuel pin's axial temperature profile $t(z)$ at its center line may be approximated roughly by

$$t(z) = t_{\text{in}} + q_c''' A_c \left[\frac{H_e}{\pi c_p \dot{m}} \left(\sin \frac{\pi z}{H} + 1 \right) + \frac{1}{hC} \cos \frac{\pi z}{H} \right], \tag{55}$$

for pin cross sectional area A, outer circumference C, and length H and for coolant inlet temperature t_{in}, specific heat c_P, mass flow rate $\dot{m}$, and convective heat transfer coefficient h. Representative axial temperature profiles are shown by Fig. 10. The worst-case conditions between the fuel and the coolant for the core as a whole determine the limiting enthalpy rise factor [Eq. (53)].

IV. DESIGN CALCULATIONS

Key elements in the design and operation of nuclear reactors and facilities relate to considerations of the neutron balance

$$\text{Accumulation} = \text{production} - \text{absorption} - \text{leakage}.$$

The methods used to control the balance influence the calculational approaches.

For power reactors, it is required to be able to adjust the balance to critical for steady power operation, to supercritical for power increases, and to subcritical for power decreases including shutdown. The necessity to be able to operate for extended periods of time without having to change fuel, leads to designing in "excess" multiplication (reactivity), which must be "held down" under most circumstances. Production may be adjusted-short term by moving fuel and long-term through fissile depletion and fertile conversion. Leakage changes with material density, geometry, or reflection. Absorption, generally the dominant control method, relies on addition of solid or souluble poisons as well as fission product poisoning as fuel depletes. Excessive power levels are avoided by limiting the size and rate of the changes and by providing for automatic shutdown mechanisms, often through rapid insertion of absorbing materials.

For nuclear fuel production facilities, the goal is to maintain nuclear criticality safety (subcriticality) under all circumstances. Thus, there is no specific need to be able to increase multiplication. Production in the neutron balance is controlled by limiting the amount of fissile material. Solid or liquid absorbers may be added as needed. high-leakage *favorable geometries* (i.e., those with large surface-to-volume ratios such as long, slender cylinders) are especially favored.

A. Reactor Methods

All reactor design calculations require cross sections. The usual approach is to start with the basic experimental data such as that contained in the Evaluated Nuclear Data File (ENDF), a computer-based set containing point-by-point data (as many as 100,000 points) for each reaction and essentially all nuclides of interest. Based on the definitions

of group fluxes and cross sections [Eqs. (37) and (38)] and using ENDF data with representative compositions for the reactor design under consideration to construct macroscopic cross sections, Eqs. (39) (or equivalent) may be used to develop libraries of from tens to a few hundred group cross sections. These libraries are employed, in turn, with a similar procedure and detailed design data (compositions, dimensions, temperatures, etc.) to calculate "few-group" (typically two to four for water reactors, as many as sixteen or more for fast reactors) cross sections for each specific configuration.

Spatial calculations are generally divided into two-dimensional radial and one-dimensional axial models with the results combined through a synthesis process to determine the hot-spot and hot-channel factors that will determine the limiting conditions for power operation. For water moderated reactors, the calculations are generally performed with diffusion theory models augmented with "effective" parameters determined by transport theory methods.

The radial model, which may be reduced to a single quadrant if symmetry allows, may be coarse-mesh (e.g., one node per fuel assembly) or fine-mesh (e.g., one node per fuel pin) and usually based on fixed concentrations, geometry, temperatures, and other operating characteristics. For an initial set of parameters (e.g., starting "guess"), the effective multiplication factor k will be calculated; if it differs significantly from unity, changes (perhaps fissile content in initial design stages, more likely fixed or soluble poison content for an existing system) are made until a critical configuration is achieved. These results will also be examined for hot-spot and hot-channel implications, and refined if necessary. They are used for normal fuel loading, control rod sequencing (which may be particularly disruptive in terms of power peaking if care is not taken), and reactivity feedbacks (via reactivity difference between cases with only the desired parameter changed).

The axial model is usually derived from averaged parameters of the radial calculations with the ability to move solid poisons (control rods) and to include a mechanism to iterate fuel and moderator temperature feedback effects and to include other thermal-hydraulic considerations.

Point kinetics Eqs. (45) using β and l^* values and reactivity feedbacks determined from the radial model are used to determine dynamic system responses for normal operations and anticipated transient conditions. Results serve to establish time-dependent system operating limits and predict safety-related responses.

Long-term changes associated with depletion are generally calculated with quasi-static methods using appropriate modifications of Eqs. (49) and (50). A radial calculation is used to determine flux levels (by fuel bundle or pin depending on the needed detail) which are then used to "burn" the fissile, fertile, major fission product poison (e.g., ^{149}Sm and ^{135}Xe), and other important nuclides through a "time step." The resulting concentrations then feed the next radial calculation and the process is repeated as many times as necessary to cover the useful lifetime of the fuel. At each time step, peaking factors must be evaluated for acceptibility (with design or fuel loading changes made if necessary). The results, which also feed appropriate axial and kinetics calculations, are important in establishing lifetime control strategies (e.g., for refueling and for withdrawal of poison control rods and/or dilution of soluble poison).

B. Fuel-Facility Methods

Calculations for criticality prevention in fuel facilities (i.e., for criticality safety) are generally based on fixed, worst case, compositions and configurations. There is generally no need to consider time-dependent effects, although credible potential ranges of thermal-hydraulic parameters must be included.

Since material, component, and facility geometries tend to be much more irregular than those found in reactors, diffusion theory methods are generally not applicable. Transport theory is often used with the discrete ordinates approach for systems that can be approximated in one or two dimensions and with the Monte Carlo approach for three dimensions. Cross sections are developed in a manner similar to that described for reactors, although expanded somewhat to handle the extensive variety of material forms (e.g., solutions, powders, metals, ceramics, and mixtures thereof for both fissionable and other materials). Certain of the Monte Carlo codes can use essentially continuous cross sections (e.g., much of the ENDF set with some special modifications for material and geometric interactions).

SEE ALSO THE FOLLOWING ARTICLES

FISSION REACTOR PHYSICS • HEALTH PHYSICS • HEAT EXCHANGERS • NUCLEAR CHEMISTRY • NUCLEAR FUEL CYCLES • NUCLEAR FUSION POWER • NUCLEAR PHYSICS • NUCLEAR POWER REACTORS • NUCLEAR SAFEGUARDS • RADIATION SHIELDING AND PROTECTION • RADIOACTIVE WASTES • RADIOACTIVITY

BIBLIOGRAPHY

Benedict, M., Pigford, T. H., and Levy, H. W. (1981). "Nuclear Chemical Engineering," 2nd ed. McGraw-Hill, New York.

Duderstadt, J. J., and Hamilton, L. J. (1976). "Nuclear Reactor Analysis," Wiley, New York.

El Wakil, M. M. (1978). "Nuclear Heat Transport," American Nuclear Society, Hinsdale, IL.

Foster, A. E., and Wright, R. L., Jr. (1977). "Basic Nuclear Engineering," Allyn and Bacon, Boston.

General Electric Co. and Knolls Atomic Power Laboratory (1996). "Chart of the Nuclides (Nuclides and Isotopes)," 15th ed., San Jose, CA (available as booklet or wall chart from nuclides@sjcpo2.ne.ge.com).

Glasstone, S., and Sesonske, A. (1994). "Nuclear Reactor Engineering (Volume 1: Reactor Design Basics & Volume 2: Reactor Systems Engineering)," 4th ed., Chapman & Hall, New York.

Hetrick, D. L. (1971). "Dynamics of Nuclear Reactors," University of Chicago Press, Chicago.

Keepin, G. R. (1965). "Physics of Nuclear Kinetics," Addison-Wesley, Reading, MA.

Knief, R. A. (1992). "Nuclear Engineering: Theory and Technology of Commercial Nuclear Power," 2nd ed., Taylor & Francis/Hemisphere, New York.

Lamarsh, J. R. (1966). "Nuclear Reactor Theory," Addison-Wesley, Reading, MA.

Lamarsh, J. R. (1983). "Introduction to Nuclear Engineering," 2nd ed. Addison-Wesley, Reading, MA.

Murray, R. L. (1993). "Nuclear Energy," 4th ed., Pergamon Press, Elmsford, NY.

Onega, R. J. (1975). "An Introduction to Fission Reactor Theory," University Publications, Blacksburg, VA.

Ott, K. O., and Bezella, W. A. (1989). "Introductory Nuclear Reactor Kinetics," American Nuclear Society, La Grange Park, IL.

Todreas, N. E., and Kazimi, M. S. 1990. "Nuclear Systems (Vol. 1: Thermal Hydraulic Fundamentals and Vol. 2: Elements of Thermal Hydraulic Design)," Taylor & Francis/Hemisphere, New York.



Nuclear Safeguards

Joseph P. Indusi
Jonathan B. Sanborn
Brookhaven National Laboratory

I. Domestic Safeguards
II. International Safeguards
III. Protection Against Sabotage
IV. Procedures and Systems for Domestic Safeguards
V. Conclusion

GLOSSARY

Alpha particle Nucleus of a helium atom consisting of two protons and two neutrons. Alpha particles are given off in the radioactive decay of some elements.

Beta particle Naturally occurring product of radioactive decay consisting of an electron.

Chain reaction Self-sustaining fission reaction in which the neutrons released in one fission of an atom are capable of splitting other atoms.

Fabrication plant Facility for the manufacture of nuclear reactor fuel assemblies from uranium, plutonium, and other materials.

Fission Splitting of the nucleus of a relatively heavy atom into two or more nearly equal fragments. The process results in the release of energy and the emission of neutrons. Fissions are normally induced by a neutron being captured by the nucleus. Only certain elements, notably uranium and plutonium, undergo fission.

Gamma ray High-frequency electromagnetic pulse of energy emitted as a product of radioactive decay in some elements.

High-enriched uranium (HEU) Uranium whose isotope content is 20% or moreuranium-235 by weight.

Inventory difference (ID) Difference between the book inventory and the physical inventory. Mathematically identical to MUF.

Limit of error on inventory difference (LEID) Mathematically identical to LEMUF.

Limit of error on material unaccounted for (LEMUF) Statistical limit or uncertainty component used in constructing a 95% confidence interval associated with a quantity (MUF) after any recognized bias has been accounted for.

Low-enriched uranium (LEU) Uranium with an isotope content that is less than 20% ^{235}U by weight.

Material balance area (MBA) Identifiable physical area of a facility such that the quantity of nuclear material transferred in or out is measurable.

Material unaccounted for (MUF) Quantity of material calcualted by subtracting the ending inventory (EI) plus

removals (R) from the beginning inventory (BI) plus additions (A). The choice of the word "unaccounted" is unfortunate since the quantity so calculated is not necessarily unaccounted for or missing.

Neutron Fundamental unit of matter having zero electrical charge and a mass approximately the same as a proton.

Production reactor Nuclear reactor designed for transmuting, by neutron capture, an element in the fuel to another element. Most production reactors produce plutonium from uranium-238.

Reprocessing plant Facility for extracting and separating uranium, plutonium, and fission fragments from spent reactor fuels.

DOMESTICALLY, nuclear safeguards refers to the collection of procedures and systems for detecting and preventing the theft, diversion, or misuse of nuclear materials. In addition to the detection and prevention functions of domestic safeguards systems there is in the United States a search and recovery system to locate and track special nuclear material or radioactive material that has been removed from authorized locations. There are also penal provisions in federal law for unauthorized possession or use of nuclear materials.

The primary materials of interest are so-called special nuclear materials. (SNM), mainly enriched uranium and plutonium which are fissionable materials. Other more-radioactive materials are of lesser interest but might be intentionally misused to cause contamination or disruption. Nuclear safeguards also includes the protection of nuclear facilities and transport operations from sabotage.

In an international context, nuclear safeguards refers to a system of data reporting and inspections by the International Atomic Energy Agency (IAEA) to verify adherence to the Nonproliferation Treaty (NPT) and other bilateral agreements or to detect possible diversion of nuclear material from peaceful uses to weapons development. Adherence to international safeguards agreements is voluntary, and the IAEA has no role in preventing diversion; its role is to verify compliance with NPT or other agreements and to notify member nations when it detects a potential diversion or is unable to verify compliance with the NPT. When the IAEA is unable to verify compliance or if substantial evidence of a diversion is found, the Secretariat of the IAEA notifies the Board of Governors, which then may notify the United Nations Security Council. Note that states with nuclear weapons may submit their nondefense materials and facilities for IAEA inspection.

I. DOMESTIC SAFEGUARDS

A. Basic Description of Nuclear Power Fuel Cycles

Some of the materials to be safeguarded by domestic safeguards and security systems and some of the facilities to be protected against sabotage are found in the nuclear power fuel cycle. Other uses of nuclear material may be found in the medical, industrial, agricultural, and scientific research and educational sectors; however, the safeguards concerns in these areas are relatively minor. There are stringent regulations governing the use, packaging, transport, and accountability of radioactive isotopes, which are the commonest form of nuclear materials in these areas.

The other areas of safeguards concern are the nuclear research and defense material production programs. Some research reactors and government nuclear material production reactors use enriched uranium and plutonium as fuels. In addition, considerable quantities of special nuclear materials (SNM) are found in the associated research and materials processing facilities. In the United States, most nuclear research is conducted under federal sponsorship, and all defense production programs are under federal direction, whereas the nuclear power program is operated by commercial firms and utilities under government licenses issued by the Nuclear Regulatory Commission (NRC). Research reactors at universities and research institutes are also operated under NRC licenses.

In this section, we give a basic description of nuclear power fuel cycles. A more detailed treatment may be found elsewhere in this encyclopedia. The basic objective of the nuclear power industry is the production of electrical energy from uranium fuel. Once the electricity is generated, it is distributed in the same way as other electricity. A nuclear reactor uses nuclear fuel in a controlled chain reaction to generate steam, which is then directed to a steam turbine that is coupled to the shaft of an electrical generator. Nearly all power reactors in the United States are fueled by low-enriched uranium (LEU); typically 3–5% of the uranium total is the ^{235}U isotope. A few relatively small test reactors used various other fuel loadings, and only one commercial power reactor used highly enriched uranium (HEU). There were approximately 114 operable commercial power reactors in the United States in 1989.

Most reactors, except for those just noted, use LEU fuel in a large vessel containing ordinary water as coolant. Other reactors, notably the Canadian designs, use heavy water as the coolant. Ordinary water (H_2O) is sometimes called light water, whereas D_2O (the D signifies deuterium, an isotope of hydrogen) is called heavy water. Those reactors using light water as coolant are called light-water

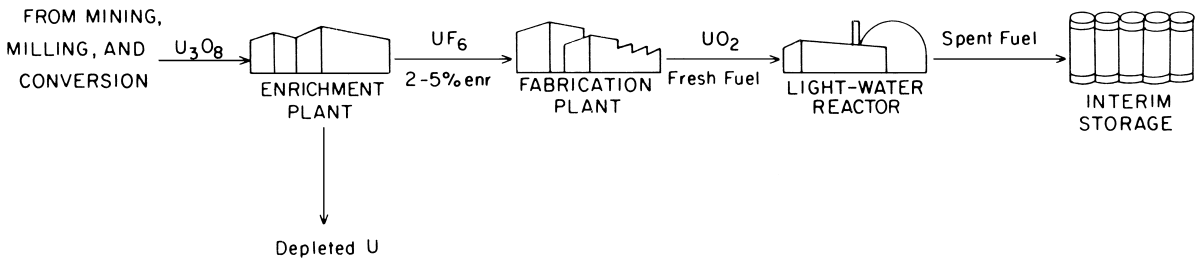

FIGURE 1 Nuclear power fuel cycle: once-through system.

reactors, or LWRs, of which there are two types; the pressurized water reactor (PWR) and the boiling water reactor (BWR). From a safeguards perspective these are essentially equivalent.

To support the operation of the LWR reactors a few associated fuel cycle facilities are required. The simplest fuel cycle, the LWR once-through system is shown pictorially in Fig. 1. Material is received from mining, milling, and conversion facilities with the natural abundance in the ^{235}U isotope of about 0.7%. Such uranium is called natural uranium. The U_3O_8 product is converted to the gas UF_6, or uranium hexafluoride. The UF_6 feed is enriched to yield a product with an enrichment somewhere between 2 and 5%, depending on fabrication plant needs. The enriched UF_6 is converted to UO_2 (uranium oxide), made into pellets, and then packed into fuel rods clad in an alloy of zirconium called Zircaloy. The rods are assembled into fuel bundles or fuel assemblies. This fuel is loaded into the reactor and unloaded at the end of its useful life. Typically only one enrichment plant and one fuel fabrication plant are needed to service many reactors. The spent fuel elements, containing highly radioactive fission products, uranium, and a small amount of plutonium, are usually stored in pools at the reactor site. Some spent fuels are shipped off the reactor site for interim storage. In the United States, the enrichment plants are owned by the Department of Energy (DOE) and operated by its contractors. The fuel fabrication plants and the reactors are commercially owned and operated under licenses granted by the NRC.

A more mature and complete fuel cycle system, the recycle system, is shown in Fig. 2. There is no complete recycle system in the United States today although three separate reprocessing plants for commercial fuel were built.

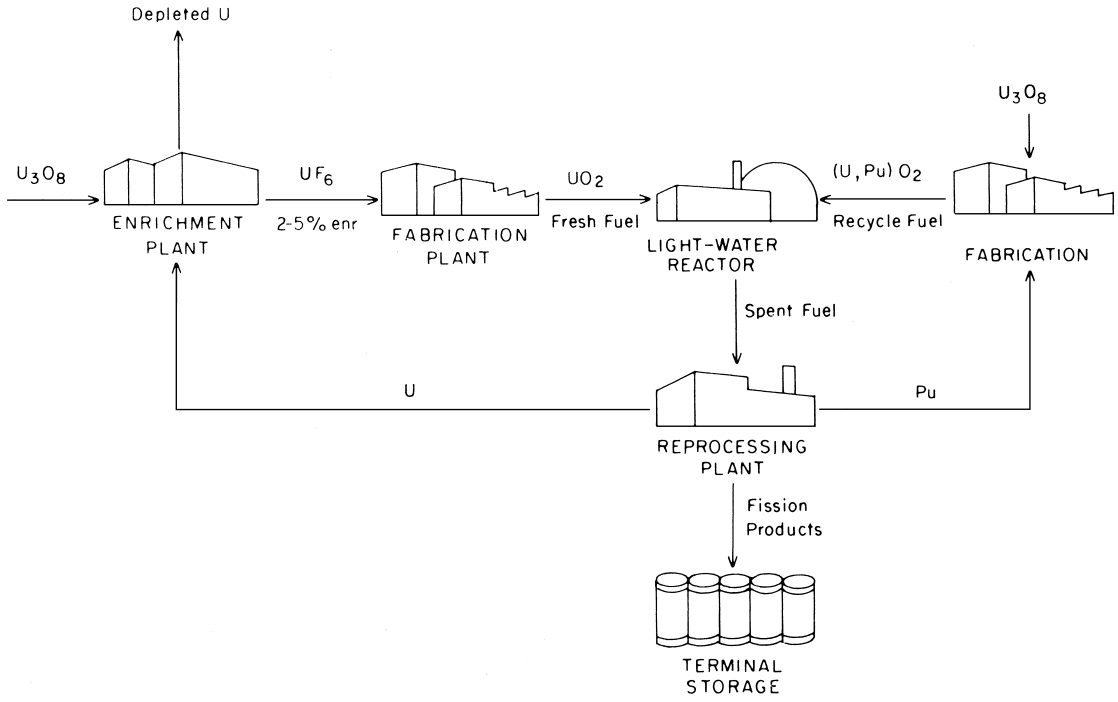

FIGURE 2 Nuclear power fuel cycle: recycle system.

The first plant was built and operated by Nuclear Fuel Services at West Valley, New York, although that plant is now shut down. Two other plants, one at Morris, Illinois and one at Barnwell, South Carolina were built but never operated. Some nations have built and operated laboratory or small-scale reprocessing plants, and several Western nations (Belgium, France, the Federal Republic of Germany, and Great Britain) and Japan had planned to have commercial facilities in operation around the year 2000. All nuclear weapons states have reprocessing plants associated with their military programs.

In the recycle system the reprocessing plant receives the spent reactor fuel after it has cooled for some period and, through a process of chemical operations, separates the uranium, plutonium, and fission-products. As shown in Fig. 2, the uranium way be returned to the enrichment plant for reuse. The highly radioactive fission products and other wastes are placed in terminal storage. A number of workable technical processes exist for immobilizing these waste products and securing them in long-term storage. The plutonium is also reused by a fabrication plant to fabricate mixed oxide (PuO_2 and UO_2) fuels suitable for use in LWRs. The plutonium may also be used to fuel liquid metal fast breeder reactors (LMFBR), but this is not shown in Fig. 2. The safeguards concerns in the recycle system are greater because of the presence of separated plutonium at the reprocessing plant and the mixed oxide fabrication plant.

Other fuel cycles using thorium, uranium-233, enriched uranium, and natural uranium as fuel constituents have been proposed and are in use in some nations. However, the two fuel cycle systems shown in Figs. 1 and 2 are the most common.

B. Basic Description of Nuclear Research and Weapon Material Production

Most nuclear research programs use small quantities of nuclear materials to test effects and material properties. Some research programs require the use of reactors to supply high-intensity neutron fluxes for experimental programs. These reactors are also used for some medical and biological experiments. Many research reactors use HEU and/or plutonium as fuel and hence are of safeguards concern.

Considerably larger quantities of nuclear materials are processed in the manufacture of nuclear weapons and reactor fuels for naval propulsion reactors. Figure 3 shows the major basic flow paths of nuclear materials in the research, weapons production, and naval propulsion programs. The naval propulsion program uses primarily HEU to fabricate reactor cores for use on submarines and aircraft carriers. These fuels have traditionally been manufactured in

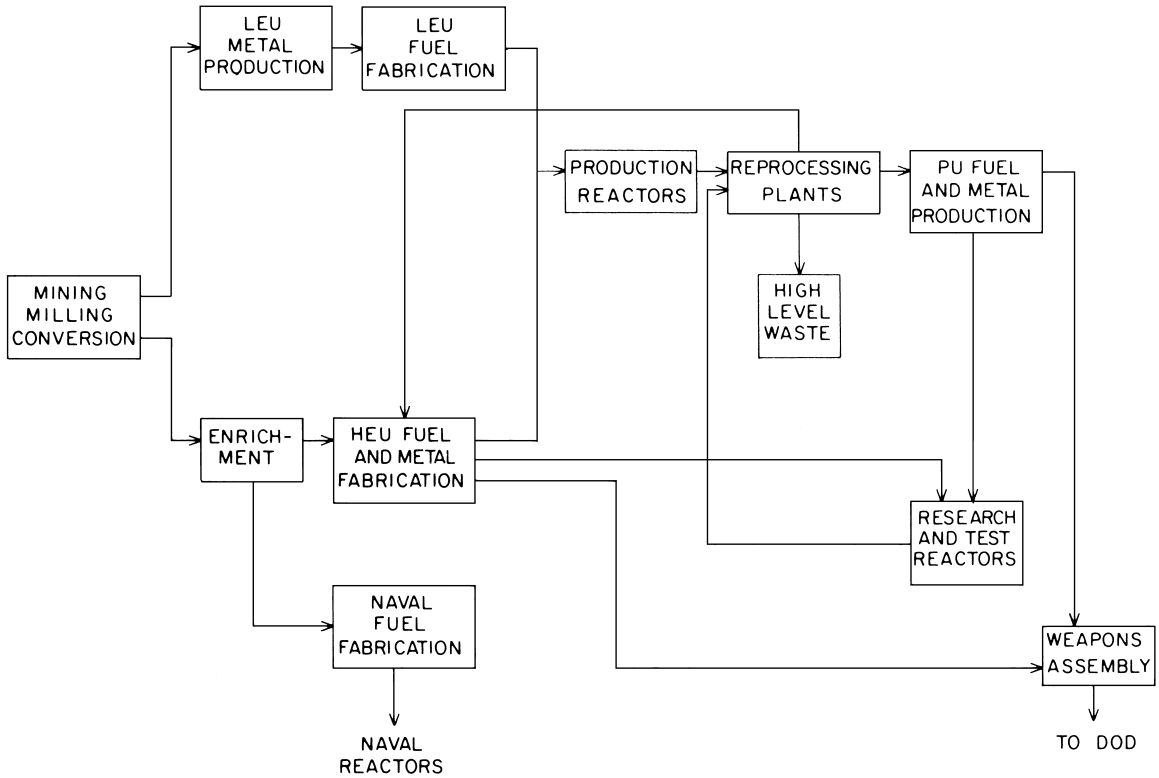

FIGURE 3 Nuclear materials flow in nuclear research, weapons production, and naval propulsion programs.

licensed commercial facilities. Research reactor fuels have been manufactured in licensed commercial plants as well as government (DOE) owned plants.

The weapons program requires LEU, HEU, plutonium, and nonnuclear materials. The production reactors produce plutonium by neutron capture in uranium-238. Other isotopes for defense and research activities are produced in the production reactors as well. HEU, LEU, and Pu fuel and metal preduction facilities produce fuel assemblies and weapons components. These plants often process material in many chemical and physical forms. All reprocessing is done at government-owned plants which are optimized for the materials being processed. Recently, as a result of several arms reduction treaties, the U.S. Department of Energy weapons production complex has undergone a reduction in facilities and material throughput in comparision to the Old War era.

C. Importance of Special Nuclear Material

The safeguarding of nuclear materials is carried out to protect the national security and the health and safety of the public from malevolent acts involving the misuse of nuclear materials. In general, highly radioactive materials, such as spent reactor fuel, are self-protecting in the sense that an adversary would be endangered by handling these materials. Stringent safeguards are applied where there is a potential for causing serious harm to the public from the release or dispersal of such materials. These materials are always packaged, transported, and processed in heavily shielded containers or facilities. In most cases, these precautions would make dispersal of the material extremely difficult, even by highly motivated adversaries.

Source material is natural or depleted uranium or thorium in any chemical or physical form. This material itself is not weapons-usable, however, it may be transmuted by neutron irradiation in a reactor (or other means) and the products chemically separated or enriched to create material suitable for weapons fabrication. Enriching or transmuting source material into weapons-usable material requires large quantities of source material, relatively high technology and related experience, considerable capital investment, and time for the conversion processes. For these reasons, the safeguards applied to source materials are less stringent than those applied to more attractive (nearly or totally weapons-usable) materials.

The material of greatest concern from a safeguard point of view is SNM, which is defined as plutonium or uranium enriched in isotope 233 or isotope 235. Under the proper conditions, these materials can undergo self-sustaining fission (chain reaction) with the release of considerable energy. In a nuclear weapon, the energy release is rapid and results in explosive forces, whereas in a power reactor, the reaction is controlled to utilize the energy in the form of heat.

Both DOE and NRC regulations consider uranium to be SNM when the enrichment in ^{235}U is above normal. When separated from other materials, both uranium enriched in ^{235}U (to more than 20%) or ^{233}U (to more than about 12%) and plutonium are considered to be nuclear weapons-usable materials. However, many considerations involving the material form, purity, and level of technical sophistication have a bearing on whether a particular quantity of material may be fabricated into a weapon. It is widely known that practical nuclear weapons generally use relatively pure HEU ($>90\%$ ^{235}U) in metallic form or relatively pure ^{239}Pu metal containing small amounts of the other plutonium isotopes. This does not mean that it is impossible to fabricate weapons from relatively impure nonmetallic material but that a very high degree of technical skill is needed to assure a nuclear yield using such materials. There is considerable discussion in the safeguards community as to just how difficult a small terrorist group would find it to fabricate a nuclear weapon even if they had relatively pure metallic material. Starting with something other than pure metal involves considerable knowledge of chemical and physical processing methods. In addition, the yield from each processing step may not be great enough for a group with limited resources and experience, so that considerable amounts of material may be needed to obtain a reasonable quantity after processing for weapon use. Recognition of these facts has led to a graded safeguards approach, or gradation in the safeguards applied, to any given quantity and type of SNM. Clearly, the requirements on frequency of inventory-taking and the physical protection applied to metallic weapons components are more stringent than those applied to nitrate solutions or scrap material containing some SNM. Similarly, protection requirement for large quantities are more stringent than for smaller quantities of the same material. More details concerning categories of SNM and associated safeguard systems will be provided in Section IV.

II. INTERNATIONAL SAFEGUARDS

A. International Atomic Energy Agency Objectives

The area of international safeguards represents a major step forward in international cooperation. Under the International Atomic Energy Agency (IAEA), which is affiliated with the United Nations, countries place their nuclear programs under monitoring and inspection by IAEA representatives. Nations wishing to abide by the Nonproliferation Treaty (NPT) agree not to manufacture nuclear weapons and by treaty and agreements accept safeguards

inspection of all their peaceful nuclear activities by the IAEA. Other nations voluntarily accept IAEA safeguards under other arrangements in which some but not all nuclear activities are submitted to IAEA safeguards. These acts assure their neighbors and others in the world community that they are not developing or manufacturing nuclear weapons from safeguarded nuclear programs. The only control that the IAEA can exert is voluntary compliance, independently verified by the IAEA safeguards activities. The IAEA objective is therefore to verify compliance with safeguards agreements and notify member states whenever it can no longer verify compliance. If the IAEA were to discover discrepancies (anomalies), it may confer with the state and investigate further. If the IAEA is still unable to conclude that materials are accounted for (within accepted limits of error on their measurements) or there is other substantial evidence of noncompliance with safeguards agreements, then the issue is reported to the IAEA Board of Governors and to the United Nations. After that, nations may take action individually or in concert as they see fit.

It must be stated that the IAEA safeguards system has its limitations. First, the IAEA has no control over national governments and cannot by force prevent the manufacture of nuclear weapons. The IAEA also applies its safeguards agreements to known peaceful nuclear activities identified in the agreements. IAEA inspectors cannot and are not expected to detect a secret weapons program. Not all countries with nuclear programs have signed the NPT, but so far 124 have. The three treaty weapons states, the United States, Russia, and the United Kingdom agree not to assist other countries in obtaining nuclear weapons. France has not signed the NPT but has agreed to observe the NPT provisions, and the Peoples Republic of China has made assurances that it will not assist others in developing nuclear weapons. Other states that have not signed the NPT include India, Israel, Brazil, Argentina, and Pakistan. Finally, it should be noted that any nation may withdraw from or abrogate IAEA safeguards agreements. However, except for attempts by Iraq to develop clandestine SNM production capability, none has done so in the more than 23 years that the system has been in operation. In summary, the IAEA safeguards system provides a basis for trust, assurance, and confidence that nations with peaceful nuclear programs are not diverting nuclear materials to weapons use.

B. System of Accounting and Control

To apply IAEA safeguards in a member state, the state must have its own system for accounting and control of nuclear material (SSAC). The IAEA system relies on inventory data reported by the member state on the nuclear material holdings at each facility. IAEA inspectors, on a predetermined schedule, then visit the facility to verify independently the amount of material at key points in the facility. Hence the SSAC must be able to supply data needed by the IAEA system to reach conclusions on the accountability of nuclear materials.

In its simplest form the SSAC must be able to measure and report any changes in the inventory of material in a material balance area (MBA), which is an area where the transfer and inventory of material may be readily determined. In addition the SSAC must report data from periodic inventory, including details of each item or material quantity constituting the inventory. The SSAC must also be able to report to the IAEA any unusual occurrences involving the possible loss of nuclear material. These requirements represent a minimum capability for the SSAC. Many more capabilities, including requirements on records and reports, measurement quality and calibration programs, measurement error analysis, and material balance calculations, are required.

C. IAEA Safeguards Activities

Material accountancy is considered by the IAEA to be the safeguards measure of fundamental importance. The material accountancy system is based on records and physical inventories supplied by the facility operator and subsequently verified by the IAEA inspectors. To complement material accountancy, containment and surveillance systems are employed to ensure the integrity of previous material measurements and to ensure that all SNM flows through normal channels in and out of material balance areas. Containment measures are designed to restrict access to material while surveillance provides human or instrumental observation to detect the movement of nuclear material. The use of tamper-indicating seals on SNM containers and IAEA-sealed time-sequenced cameras have been successfully employed at some facilities. The role of the IAEA on the issue of physical protection or physical security is an advisory one. Physical security at a facility is the responsibility of the individual state.

The application of IAEA safeguards requires the completion of a number of legal and technical documents. The first of these is the Agreement for the Application of Safeguards, which is negotiated between the IAEA and the state. This agreement defines in general terms the purpose of the IAEA safeguards, the responsibilities of the IAEA and the state, and the structure of the safeguards to be applied. In overall form, most agreements follow the IAEA model for safeguards agreements under the NPT, entitled “The Structure and Content of Agreements Between the Agency and States Required in Connection with

the Treaty on the Non-Proliferation of Nuclear Weapons," INFCIRC/153 (Corrected) of June 1972 (also called the Blue Book). Not all existing IAEA agreements are under the NPT; those for non-NPT states are under different guidelines, primarily those contained in "The Agency's Safeguards System," INFCIRC/66/Rev. 2.

Subsidiary arrangements are prepared after the agreement has been negotiated. The subsidiary arrangements define the details of implementation of safeguards according to the general principles given in the agreement. The subsidiary arrangements address ten areas, referred to as codes, concerned with the application of safeguards; these include such issues as the national system for control of and accounting for nuclear material, provision of information, international transfers of material, inspection effort and inspectors, and report forms. The subsidiary arrangements address these details as they apply to the entire nation, whereas facility attachments contain details on these issues as they apply to individual facilities. Facility attachments contain the definitions of material balance areas (MBAs) and key measurement points (KMPs). KMPs are generally locations where nuclear material appears in a form that may be measured to determine material flow or inventory; KMPs may therefore include the inputs, outputs, and storage areas of MBAs. The facility attachments also contain a definition of surveillance and containment measures to be applied, a list of typical material batches and types for each KMP, and the specific types of accounting records kept at the facility. The design information questionnaire (DIQ) provides a detailed description of the facility and the nuclear materials measurement and accounting system. The DIQ provides sufficient information about a facility to allow the IAEA to formulate facility-specific details of the safeguards to be applied.

When all these documents and agreements have been completed, the state begins reporting data to the IAEA. Generally, the state submits reports for each facility on an MBA basis. Reports are submitted whenever the MBA inventory changes and after a physical inventory of an MBA. The IAEA maintains these records in a central facility at IAEA Headquarters in Vienna, Austria. The IAEA inspectors visit the facility at appropriate times to verify material quantities, check containment and surveillance devices, and perform record audits. Following an inspection, the inspectors file an inspection report. Analysis of all the inspection reports is done by IAEA Headquarters and a safeguards implementation report is issued annually to the Board of Governors summarizing the status of safeguards performance and findings during the previous year.

The IAEA focuses most effort on attractive material or material most easily converted to weapons use. Although the exact safeguards inspection strategy employed for a given facility is classified by the IAEA as "safeguards confidential" information, the general inspection approach for more important materials involves more frequent inventories and inspections and more stringent containment and surveillance measures. The development and implementation of effective safeguards approaches for each type of reactor and nuclear facility are time-consuming and difficult efforts. Considerable effort is expended by the IAEA and experts from member states in defining these safeguards inspection strategies.

D. Strengthened Safeguards

NPT safeguards activities under INFICRC/153 are aimed almost exclusively at safeguarding declared nuclear facilities and accounting for declared material. Following the Gulf War and the discovery of an entirely covert nuclear weapons development program in Iraq, the IAEA initiated a series of studies to determine how its inspection system could be improved to detect the existence of clandestine nuclear facilities. The result of these deliberations was a document called the "Additional Protocol" or INFCIRC/540. Like INFCIRC/153, INFCIRC/540 is a model agreement having no legal force until its text is incorporated into an agreement between a state and the IAEA. However, wide acceptance of the Additional Protocol by non-nuclear weapons states that have signed the NPT is expected. The inspection regime incorporating both INFCIRC/153 and INFCIRC/540 has become known as the "strengthened safeguards system."

INFCIRC/540 requires a broad set of declarations of nuclear-related activities, including: nuclear fuel cycle-related research and development; production of nuclear-related items, such as uranium enrichment equipment or reactor control rods; uranium mining; and the processing of nuclear materials not previously subject to reporting. It also provides for much broader rights of access by IAEA inspectors, not only to the locations identified in the new declarations, but to any location in the state to resolve questions or inconsistencies arising from the declarations. The provisions of INFCIRC/540 are not prescriptive as to the frequency of inspections; it has been left to the IAEA Secretariat to determine a balance in the effort it will devote to conventional safeguards inspections of declared nuclear material and the effort it will devote to the new provisions to detect clandestine activities.

III. PROTECTION AGAINST SABOTAGE

A. Radiological Sabotage Potential

The traditional concern of nuclear safeguards has been the protection and accountability of SNM. While this area

remains a current concern as a result of worldwide terrorist activity, there is also recognition of the need to protect certain facilities and materials from acts of sabotage that may place the public at risk to radiation exposure. Obviously, certain facilities and materials constitute greater risk than others. It is generally recognized that large reactors, particularly power reactors, have the potential, if sabotaged, of causing the release of radioactive materials beyond the reactor site boundary. The relatively large radionuclide inventory and the energy in the reactor core are the primary reasons that reactors are of greatest concern. For a particular radioactive release to have far-reaching effects, sufficient material must be released to cause unsafe concentrations in the air, on the ground, or in water. In addition to the amount of material released, there must be sufficient dispersal of the material for it to reach beyond the site boundary. From reactor accident analyses and experimental data we know that the fraction of material released is quite small. Similarly, experimental explosive attacks on spent-fuel shipping casks were analyzed and have shown respirable release fractions in the range of hundredths of a percent of the material originally in the cask. Detailed studies have also been carried out for postulated sabotage attacks on certain other facilities. In general, the conclusions are that radiological sabotage would be difficult to carry out by a terrorist team, even if highly motivated. To be successful, in most cases the adversary would need to have a degree of technical knowledge, some familiarity with the facility, the aid of someone working at the facility (an insider), and unimpeded access to certain vital equipment of the facility and to be willing to place himself at risk. In spite of these considerations, both the NRC and the DOE have established requirements for the physical protection of reactors. The NRC requirements are set forth in the Code of Federal Regulations Title 10, Part 73.55 (10CFR 73.55). These rules apply to all licensed nuclear power reactors. A physical protection system is required that contains the following provisions.

1. A physical security organization with documented and NRC-approved procedures with armed guards constituting the main response capability and backup from local law-enforcement groups.
2. A system of physical barriers establishing an outer protected area in which are located vital areas also delineated by physical barriers. The vital areas contain the vital equipment that must be protected to prevent successful sabotage.
3. Access controls on personnel authorized entrance into the protected and vital areas. Included here are identification systems and searches for weapons or other sabotage aids.
4. Detection aids for sensing intrusions into the protected and vital areas and provisions for a central alarm station and a secondary alarm station.
5. Communications equipment for notifying local law-enforcement groups and for continuous communication with plant guards.
6. Testing and maintenance systems for all security and alarm systems.
7. Requirements on the nature and size of the response to an intrusion or incident.

DOE also requires similar physical protection measures for nuclear reactors. For other nuclear facilities, the approach has been to require protection graded according to the severity of the radiological consequences that might ensue if a sabotage act were successful.

B. Industrial Sabotage

With the increasing level of terrorist activities worldwide and the attacks on U.S. installations in particular, the DOE has instituted a program of enhanced physical protection for certain key facilities. In addition to protecting the health and safety of the public, the objective of these physical protection programs is to maintain program continuity in the DOE research and defense sectors by preventing a long-term loss of major facilities. The physical protection measures are similar to those required for the protection of reactors. A systematic discussion of physical protection systems is presented in Section IV.C of this article.

IV. PROCEDURES AND SYSTEMS FOR DOMESTIC SAFEGUARDS

In domestic systems, physical protection of the material and associated facilities constitutes the main line of defense against diversion or theft. Material control and material accounting provide additional assurance and verification that nuclear materials are not diverted or stolen. This is in contrast to the IAEA system where material accounting and IAEA verification form the primary basis for safeguards.

A. Material Control

Traditionally in the safeguards community, the terms material control and material accountability (or accounting) have been spoken of as one, that is, material control and accountability (MC&A). Here we will treat material control and material accounting separately so that the activities of each may be more clearly understood. There are, of

TABLE I Graded Safeguards

	Attractiveness level	Pu/U-233 category (quantities in kg)				Contained U-235 category (quantities in kg)				All E materials category IV
		I	II	III	IV[1]	I	II	III	IV[1]	
Weapons										
Assembled weapons and test devices	A	All	N/A	N/A	N/A	All	N/A	N/A	N/A	
Pure products										
Pits, major components, button ingots, recastable metal, directly convertible materials	B	≥2	≥0.4 < 2	≥0.2 < 0.4	<0.2	≥ 5	≥1 < 5	≥0.4 < 1	<0.4	
High-grade materials										
Carbides, oxides, solutions (≥25 g/L) nitrates, etc., fuel elements and assesmblies, alloys and mixtures, UF_4 or UF_6 (≥50%, enriched)	C	≥6	≥2 < 6	≥0.4 < 2	<0.4	≥20	≥6 < 20	≥2 < 6	<2	
Low-grade materials										
Solutions (1 to 25 g/L), process residues requiring extensive reprocessing, moderately irradiated material, Pu-238 (except waste), UF_4 or UF_6 (≥20%, <50% enriched)	D	N/A	≥16	≥3 < 16	<3	N/A	≥50	≥8 < 50	<8	
All other materials										
Highly irradiated forms, solutions (<1 g/L), uranium containing <20% U-235 (any form, and quantity)	E									Reportable quantities

[1]The lower limit for Category IV is equal to reportable quantities in the manual.

course, areas of overlap between material control, material accounting, and physical protection.

Before proceeding further, it is necessary to define the quantities of SNM to which safeguards are applied. For material control and material accounting purposes the DOE and NRC define categories of SNM slightly differently. For DOE, the categories and attractiveness levels shown in Table I are defined to create a graded safeguards approach. See Section B.2 for inventory frequency.

For safeguards purposes, NRC defines a number of categories, some of which apply only for transportation or physical protection. For most material control and material accounting purposes, NRC and the IAEA define an effective kilogram as:

Weight of Pu and ^{233}U
>0.01 enrichment, weight of $^{235}U \times (\text{enrichment})^2$
<0.01 enrichment, weight of $^{235}U \times 0.0001$

In addition, NRC regulations (10CFR70) specify certain reporting and inventory frequency requirements for quantities of SNM >350 g and reporting requirements for quantities of SNM >1 g.

The above definitions generally apply to material control and material accounting activities. Some materials such as deuterium, lithium, tritium, and the other materials are not SNM per se. They are used in the production of SNM or other products. A discussion of their strategic value and the safeguards applied to these materials is beyond the scope of this article. The reader is referred to DOE and NRC safeguards regulations.

1. Material Location

Material control begins with regulations on where and by whom nuclear materials may be used, processed, and stored. The NRC requires full disclosure and information concerning company principals, the physical plant,

qualifications and training of the staff, safeguards, safety and security programs, financial position, and other information as part of the licensing process. DOE facilities are government-owned and operated by contractors. Potential contractors are carefully reviewed to assure their capability to operate and manage the facilities properly.

A further control on nuclear materials is the procedure for shipment of nuclear material from one facility to another. Stringent regulations govern the mode of transport, the route and schedule of shipments, and who may receive the material. In this manner, material may be transferred only to an authorized receiver.

Within a facility, NRC and DOE regulations establish locations where SNM may be stored or processed. These areas are called material access areas and must be located in a protected security area surrounded by an alarmed barrier to detect unauthorized access. The facility operating procedures and safeguards systems are designed to assure that SNM remains in the material access areas. Some controls on SNM location, such as inherent containment, are designed into the plant. Operating procedures, such as batch control (restricting material processing at any time to identifiable quantities or batches) or production scheduling systems, allow monitoring of SNM from one location to another.

2. Personnel Access

In both NRC and DOE plants, access to SNM is strictly controlled. These systems require management to authorize access to SNM to certain individuals to carry out their work. Federal regulations generally require an access authorization or clearance for persons requiring access to SNM during the course of their work. Clearances generally involve national security agency checks and full background investigations. While clearances cannot provide complete assurance of a trustworthy character, they can be expected to weed out persons who may reasonably be restricted from access to classified information or SNM. Access to the material access areas is then controlled by allowing access only to authorized individuals. These personnel access control systems generally use a picture identity card issued by the facility. Often an additional check to assure identity is made; this may take the form of a check of some inherent characteristic such as hand geometry, retinal pattern, or voice analysis. Some systems require an identity check by picture badge and a unique secret identity number.

3. Material and Personnel Monitoring

In addition to controls on SNM locations and personnel access control systems, further strenthening of safeguards can be achieved by SNM and personnel monitoring systems. To understand how these work, a few examples are described.

a. Seals and locks. These are generally applied to containers of previously measured material. Within limits and dependent on the container and seal design, assurance is gained that material has not been removed.

b. SNM portal monitors. These are specially designed SNM detectors that employees must pass through as they leave a material access area. These reduce the possibility of an employee removing SNM.

c. Buddy system or two-man rule. In this system, no single person is allowed access to SNM. Attempts at SNM removal with the two-man rule would force a potential divertor to enlist the aid of a fellow worker, thereby raising the risk of detection.

d. Closed circuit television (CCTV). These systems are commonly used in retail establishments to deter shoplifting. In nuclear facilities the CCTV is monitored to detect anomalous behavior by persons having access to SNM.

e. Change rooms. In this system, personnel remove street clothes and put on pocketless work attire prior to entering the material access area. Before leaving the material access area for the change room, personnel must pass through a SNM portal monitor.

f. Other systems. Other systems employing real-time or near-real-time monitoring of nuclear material have been designed and are in limited use in some facilities.

DOE requirements on material monitoring include the capability to locate Category I quantities within 24 hours (discrete items). Other quantities must be located in sufficient time to prevent removal of the material from the protected area of the facility. Facilities must also demonstrate the capability to meet these performance requirements with their material monitoring systems.

B. Material Accounting

To provide assurance that SNM in the national nuclear complex have not been lost, stolen, or diverted, a nuclear material accounting system has been established. This system uses two methods of accounting. If the material involved is contained in discrete items whose identity and integrity can be verified (such as fuel assemblies), such items can be counted and identified on a routine basis. If material is handled in bulk form or if it is altered by

chemical and physical processing, it is necessary to measure and (periodically) remeasure the material for its elemental and isotopic content to ensure that the total quantity has not decreased.

Item accounting should result (if no items are missing) in a complete and exact reconciliation of all items on inventory. In the case of bulk measurements, however, the unavoidable inexactness of the measurement process results in discrepancies between the measured and remeasured values for material quantities, even when no material has been lost. If these discrepancies occur between manufacturing facilities (e.g., between a shipper's and a receiver's measured values), they are termed shipper–receiver differences; if they occur before and after processing at a facility, they are termed inventory differences.

Nuclear material accounting provides an important complement to material control and physical protection systems in several ways. First, material accounting creates a degree of deterrence to potential material divertors since it provides, with reasonable assurance, that unauthorized removals (or diversions) will be discovered at the end of the material balance period. Second, material accounting provides a quantitative check of the performance of the entire safeguards program. In this way it may detect a material loss that may not have been detected by the material control and physical protection systems. Third, the material accounting program provides a record of material flows and measurements to aid in an investigation if material is suspected to have been removed. The more timely and frequently a material balance is struck, the better the data are in determining the nature and details surrounding a suspected material loss.

1. Measurements of SNM

The backbone of the material accounting system is the material measurement capability of the facility. To compute an inventory difference or a material balance, all flows and inventories of material must be measured. Much effort in the past and ongoing research and development programs in the safeguards community is aimed at improving SNM measurement techniques.

SNM measurements for safeguards purposes may be analytical in nature in that a representative sample of the material is chemically or physically analyzed to determine the SNM and isotopic (U or Pu) content contained in the sample. This fraction of SNM is then applied to the entire volume of material from which the sample was obtained. In the case of a solution the material must be agitated thoroughly to assure a homogeneous mixture. Several samples are withdrawn and their mass accurately determined. To assure additional accuracy, measurement control programs are established that control the precision and bias of a particular method by continual measurement of standard samples of known material. To measure a given batch of material, the volume or weight is determined by use of standard volume measuring techniques and scales. The volume of a tank may be measured by having a calibration curve for the manometer reading (which is proportional to the hydrostatic pressure of the liquid in the tank and therefore to the height) versus tank volume. Weights may be determined by high quality scales with allowances made for tare weights. To achieve better accuracy these may be corrected for buoyancy effects. While these types of measurements have been widely investigated, other mass measurements such as those of the gas phase inventory in a gaseous diffusion plant are considerably more difficult to determine.

An area of specialized measurement technology for safeguards purposes, among others, is the field of nondestructive assay (NDA). These methods employ nuclear radiation detectors and associated electronics to estimate the SNM content of a given quantity of material. The techniques analyze the sample by detecting photon radiation (X-rays or γ-rays), β particles, α particles (helium nuclei), or neutron activity. Many schemes have been employed to measure contained SNM; a few examples are the follow.

a. Coincidence counting. This method counts the number of coincident neutrons (neutrons emitted at the same instant) to detect spontaneous fission. This method has been successfully used to assay plutonium.

b. Active neutron interrogation. In this method an external neutron source is applied to the sample to induce fissions in the contained SNM. The resulting fission neutrons are then measured to estimate the quantity of SNM.

c. Gamma detectors. Each radioactive isotope of interest emits characteristic γ-rays. The detectors can accurately determine the number and energy of the emitted γ-rays. From the known rates of emission of the various γ-rays from each isotope, the amount of that isotope can be determined.

d. Calorimetry. This method measures the heat generated by alpha particle emission in a sample of SNM. The method requires a knowledge of the ratios of the isotopes in the sample and can provide good accuracy.

2. Material Unaccounted for and Inventory Difference

In concept, a material balance is a simple reckoning of the material in a material balance area over some interval of time or material balance period. For a given MBA, the

material unaccounted for (MUF) or the inventory difference (ID) is calculated by subtracting the ending inventory (EI) plus removals (R) from the beginning inventory (BI) plus additions (A) during that period.

Mathematically, then

$$\mathrm{MUF} = \mathrm{BI} + \mathrm{A} - \mathrm{EI} - \mathrm{R}.$$

ID is defined as the difference between the book inventory and the physical inventory. Mathematically, the book inventory is defined as

$$\text{book inventory} = \text{beginning inventory} + \mathrm{A} - \mathrm{R}$$

and

$$\text{physical inventory} = \text{ending inventory}.$$

The ID is, then,

$$\mathrm{ID} = \text{book inventory} - \text{physical inventory}.$$

Hence ID and MUF are the same mathematical quantity.

Although this is simple in concept, the calculation and determination of the measured values in an actual process often requires considerable time and effort. For example, in a simple model of a fuel fabrication plant there are three flows to be measured—the feed material, product, and waste discards—as well as the beginning and ending inventory measurements. Each of the flow measurements requires a volume measurement, sampling, and analysis. Complications arise when one considers recycle streams and additional waste streams.

The frequency with which the material balance or inventory difference is computed depends on the strategic value of the material. DOE and NRC regulations concerning the frequency of inventories are comparable. DOE requires a weekly inventory (physical count) on Category IA materials. Bimonthly inventories are required by DOE for Category I and II by NRC for greater than 1 effective kg, except in shielded parts of reprocessing plants, reactors, waste disposal systems, and so on. Biennial inventories are required by DOE for Category III and IV quantities and by NRC for greater than 1 effective kg for $<20\%$ enriched uranium or for plutonium that is $>80\%$ ^{238}Pu. Annual inventories are required by NRC for greater than 350 g of any SNM and 1000 kg of source material. Both agencies require the measurement of materials in and out of all MBAs. Some exceptions to this are small, sealed sources containing SNM, tamper-safe containers, and small samples.

The calculation of a MUF or ID is not meaningful for safeguards purposes unless it can be compared with the uncertainty in MUF or ID. These uncertainties come about from the errors in the measurements of the SNM quantities in the MUF equation. To calculate the limit of error on MUF (LEMUF) or the limit of error on ID (LEID), the errors in the individual measurements must be understood, the error magnitudes must be estimated, and these estimates must then be statistically combined to arrive at an overall limit of error for assessing the calculated MUF.

3. Errors in Measurements

a. Characterization of errors. The measurement of SNM is a physical process that estimates, from observations, the amount of a particular element present in a given material. The errors in the measurment system may be caused by a number of factors which must be determined. For purposes of error-propagation, measurement errors are generally characterized in terms of three components: random, short-term systematic, and long-term systematic. Random errors are statistically independent variations or errors that affect only a single member of a given data set. An example is the counting error in an NDA instrument. If the error affects some members of a data set in the same way, time after time, then it is called a short term systematic error. Examples are the uncertainty in a tank volume calibration curve or the error introduced by temperature effects in a manometer. If an error affects all members of a data set in the same manner, it is a long-term systematic error or bias. A consistent and well-understood bias may be corrected for in the measured value and not treated as a measurement uncertainty.

b. Estimation and propagation of errors. Measurement control programs assure consistency in the performance of the measurement program and produce data on measurement accuracy and precision. To assure adequacy in the performance of material accounting systems, the NRC and DOE require the establishment of measurement control programs. DOE has requirements for maintenance of scales and balances, analytical quality control, sample variability, calibration and standards, extra-laboratory exchanges, and so on. NRC details in its regulations how measurement control, accounting, and statistical evaluation programs are to be carried out and further elaborates on these as well as the analytical methods themselves in the NRC Regulatory Guides, Division 5. In addition, the DOE supports research and development efforts at its laboratories directed to improving safeguards measurement systems. In most cases, measurement control programs provide estimates of the error variances. In the simplest cases, the errors in a measurement system may be uncorrelated and hence may be treated as being statistically independent. In reality, measurement errors are often correlated; this necessitates an estimation of covariance terms.

To illustrate error propagation principles, consider a simple MBA processing one batch of material. Assume that there are N flows in the process. Let the random error, expressed as a fraction, be denoted by δ, and the systematic error, expressed as a fraction, be denoted by β. For a given flow, the measurements consist of a weight determination, sampling operation, and analysis. Let n_i be the number of items in each flow of inventory stratum i. Denote weighing errors by the subscript W, sampling errors by the subscript S, and analysis errors by A. In the simple case of independent errors the propagated error for flow i is

$$\sigma_i = G_i\left\{\beta_W^2 + \beta_S^2 + \beta_A^2 + \delta_W^2/n_i + \delta_S^2/n_i + \delta_A^2/n_i\right\}^{1/2},$$

where G_i is the nominal amount of SNM in the flow quantity. The propagated error for the N flows that comprise the material balance is σ_{MUF} and is given by

$$\sigma_{MUF} = \left\{\sum_{i=1}^{N} \sigma_i^2\right\}^{1/2}.$$

The limit of error on MUF is 1.96 times σ_{MUF} or

$$\text{LEMUF} = 1.96\sigma_{MUF} \approx 2\sigma_{MUF}.$$

This gives a LEMUF that provides a 95% confidence interval.

The magnitude of measurement errors in SNM measurement systems is dependent on the type of material being measured. Highly radioactive inhomogeneous waste materials are difficult to assay and have relatively large measurement error components. The analysis errors in waste measurements may be as large as 5–10% and even larger, but these involve only gram-quantities of SNM in large waste drums of contaminated combustibles. Uranium and plutonium oxides in pure product materials may be measured quite accurately with volume and sampling errors in the range of 0.1% and analysis errors in the range of 0.3%.

4. Limits of Error on MUF and ID

The comparison of the MUF to the LEMUF is essentially an hypothesis test, in which the null hypothesis is that all the material is properly accounted for (and the observed MUF is consistent with known measurement error), and the alternative hypothesis is that the measurement error cannot explain the MUF (material has been removed from or added to the accounting area). When the MUF is within the LEMUF, which it is 95% of the time (in the absence of diversion) because the LEMUF is selected to be two standard deviations, one may not conclude that there has been no diversion. All that can be said is that there is no evidence to suspect a diversion. When the MUF is greater than the LEMUF, then with 95% confidence, one may suspect that there has been a diversion of SNM. In this case an investigation is conducted to determine the cause of the large MUF or provide an explanation. Note that there may be cases where, for purely statistical reasons (the chances are 1 in 20), MUF exceeds LEMUF and there has been no diversion: this constitutes the so-called Type I error. The MUF/LEMUF analysis assesses the major aspect of safeguards performance in regard to nuclear material accounting. Other statistical tests are used to evaluate long-term trends in IDs, but these are limited in their application and have no official status in regard to safeguards regulations.

The NRC requires that facility MUF measurements be of quality high enough to assure that the limits of error do not exceed 200 g of Pu or ^{233}U, 300 g of ^{235}U in HEU, 9000 g of ^{235}U in LEU, or for any total plant in-process material (inventory or throughput, whichever is larger), 1% of Pu or ^{233}U in a reprocessing plant, 0.7% of U and fissile U in a reprocessing plant, or 0.5% of any Pu, ^{233}U, HEU, and LEU in any other plant. DOE does not define these numerical limits; however, it does require appropriate and statistically valid determination of the LEMUF for all materials except Category IV.

One final note on the numerical value of the LEMUF is in order. Even though the LEMUF at a reprocessing plant, for example, is required to be 1.0% or less, the absolute value of LEMUF may be several kilograms of SNM in a single processing run. The actual value obviously depends on the plant processing capacity and the total quantity of material being processed. The fact that a MUF may be several kilograms and be within the LEMUF is not necessarily cause for alarm. A large contributor to MUF may be poorly measured waste streams. In addition there may be large uncertainties for material held up in process piping, vessels, and valves.

C. Physical Protection

The physical protection system provides immediate response to attempts at SNM theft. Physical protection systems complement and support the material control and material accounting systems to provide a balanced safeguards program.

1. Protection against Insider or Outsider Threats

The premise for having a safeguards program is the possibility that a theft or diversion of SNM may be attempted by adversaries. To provide a baseline against which to develop a physical protection program, some definition of the threat element is needed. The NRC regulations define

a threat of theft or diversion of SNM and radiological sabotage. The threat consists of essentially the following:

1. A determined, violent, external assault; attack by stealth; or deceptive action by several persons or a small group.
2. An adversary group that is dedicated and well trained in military skills and that may have the aid of an insider in either a passive or active role, suitable weapons (up to and including automatic weapons), and hand-carried equipment such as explosives and tools for breaching barriers or other safeguards features. The group may be able to operate as two or more teams.
3. An internal threat of an insider including any employee (radiological sabotage) or a conspiracy of employees in any position (SNM theft).

The DOE threat is similar in that both external and insider threat elements are identified. The DOE threat guidance is calssified and is more explicit and detailed than the NRC threat statement. However, in practice the physical security systems are roughly comparable for similar facilities.

The existence of the threat statements does not indicate that a threat of the nature described is impending on any nuclear facility. These threat descriptions are based on inferences from historical data and consideration of analogous events by military and law enforcement experts. They are meant to provide a baseline from which to plan security system performance capabilities. These descriptions are subject to change if there is a shift in the nature of domestic criminal or terrorist activities or in intelligence information relating to threats on nuclear facilities. Use of a standard threat description also provides some balancing of the system so that no one facility or group of facilities is seen as a target of opportunity by a potential adversary.

2. Protection against SNM Theft or Sabotage

The potential threat of SNM theft requires the adversary to obtain access to the SNM, gather a sufficient quantity for the intended misuse, and leave the facility unhindered to a safe location. Hence for some materials it may be appropriate to interrupt the adversary anywhere in this chain of events. However, the general approach has been to deny access to very attractive materials at all times. In the case of sabotage, it is necessary to prevent access to certain vital equipment, which if compromised, may lead to a release of radioactive material. In all NRC and DOE facilities, the items of vital equipment have been identified, and protection for these vital areas is required. In most cases the physical protection systems are similar whether the threat is from theft or sabotage.

3. Basic Physical Protection Elements

The DOE and NRC physical protection systems are essentially equivalent for similar type facilities. Rather than list the required elements for each, this discussion will treat the basic system elements in a generic fashion. Both systems require written security plans that detail the features of the system, hardware, communications equipment, and response force duties.

a. Detection system. The detection sensor system is designed to signal an attempted intrusion, unauthorized attempt at access, inappropriate employee behavior, or other anomalous situation. The simplest example is the intrusion alarm switch on a door or window. However, most nuclear facilities use modern electronic sensing systems that work on various physical phenomena. Usually there are redundant systems that work on two different physical principles to assure detection but minimize false alarms. Examples include Doppler-shift radio-frequency and ultrasonic detectors, buried seismic detectors, capacitance proximity detectors, and passive and active infrared systems. In addition to detecting overt intrusions, the detection system is usually coupled to the access control system. Unauthorized attempts at access to SNM will be detected by an electronic credential or identity checking system or by a facility guard.

Upon detection of an irregularity the information must be displayed on a console or the plant protective force must be signaled in some way. Most, if not all, nuclear facilities have a primary central alarm station (CAS) and a secondary alarm station. Modern display systems provide information on the location of an alarm and often prioritize the alarm signals if more than one penetration occurs. Alarm systems are self-checking to detect tampering with any portion of the system.

The physical protection system for a fixed site generally consists of an outer alarmed barrier that forms the perimeter of a protected area. In this protected area are several vital areas (containing vital equipment) or material access areas (containing SNM). This is shown schematically in Fig. 4, where it may be noted that access to the SNM in the MAA requires passage through at least two alarmed barriers.

Included in the detection system are access-control facilities at each access portal, where the identity of each employee is verified and provision is made for searches of persons and hand-carried packages. Prohibited articles include weapons, explosives, recording devices, cameras, and other sabotage aids. Upon exit from the MAA, all personnel and packages are searched or scanned for SNM.

b. Assessment of threat. Upon receipt of an alarm or detection of an intrusion, the nature of the threat must

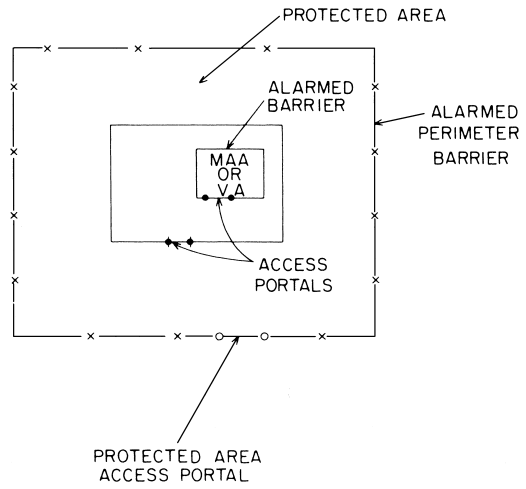

FIGURE 4 Typical physical security layout: material access area (MAA); vital area (VA).

be assessed to initiate an appropriate response. Generally, the assessment is done visually by dispatching a security guard. In the more critical facilities, rapid assessment is accomplished by the use of closed circuit television (CCTV) systems where the monitor is located in the central alarm station. Sophisticated CCTV systems have also been developed that allow full pan, tilt, and zoom capability, and electronic motion detection of the field of view. Infrared viewers especially for night use are also used in some high-security applications.

c. Communication systems. Following assessment of the nature of the threat, the intrusion must be communicated to response forces, certain operations personnel, and local law-enforcement agencies. Communications between the CAS and the response force guards is generally by two-way mobile radio, telephone, or other signaling system. Communication to local law-enforcement agencies is by telephone or radio. All communications systems are required to have redundant power supplies and must be checked on a frequent schedule. Some communications equipment use voice-scrambling systems to prevent monitoring by an adversary force. Specific commands to response-force guards are often given by code words.

d. Barriers to impede or delay access. An important part of the physical protection system are barriers that impede, delay, or in some cases essentially deny access to SNM. The simplest barrier is the familiar security fence topped by barbed wire. This provides minimal delay, and hence more formidable barriers have been developed and constructed at all nuclear-facilities. Most barriers are passive, having been designed to force the use of special tools and high explosives to penetrate them. Sophisticated barriers have been tested against a full range of potential adversary tools and tactics. These barriers provide considerable time delay to allow sufficient response-force strength to be assembled to neutralize the adversary force. Specialized barriers have also been developed to delay vehicles, aircraft, and watercraft. Some barriers have been developed that have an active component designed to further frustrate the adversary. These systems may dispense an obscuration agent, a viscous barrier, or a sensory irritant. Active barriers have been deployed to a limited degree in certain high-security applications. Barrier technology has received considerable attention in recent years for safeguards applications. A result of this has been the high degree of security for SNM storage and process areas throughout the nuclear industry.

e. Response: guard forces and others. The primary and first response to an overt intrusion or attempt at SNM theft is by the facility security force. The security force also conducts access control checks and searches, patrols sensitive areas, maintains liaison with local law-enforcement agencies, checks barriers and other security hardware, and provides limited law-enforcement and traffic-control services. Their primary mission, however, is to prevent the theft of SNM or the sabotage of facilities. The security force capability of most major nuclear facilities may best be described as paramilitary. At DOE facilities, security officers are authorized to make arrests for violation of certain federal offenses. The use of deadly force is justifiable but limited to specific situations generally associated with preventing dangerous felonies such as life-endangering acts or threats. At NRC-licensed facilities, security officers may or may not be deputized in the local jurisdiction of the facility. In addition they are armed under provisions of the Atomic Energy Act 1954, as amended (Section 161(k)). Security officers at the more sensitive nuclear facilities are equipped with sophisticated weapons, armored cars, and special detection aids.

In addition to the local security force, most facilities have arrangements with local law-enforcement agencies to provide additional response. In some situations the facility response to an intrusion may involve preplanned responses by operations personnel, health physicists, and others. All incidents involving SNM or attempted sabotage are reported to the Federal Bureau of Investigation. DOE also maintains several Nuclear Emergency Search Teams (NEST) in a state of constant readiness to assist in monitoring a situation or to participate in recovery operations. These teams are equipped with special vehicles and SNM detectors.

V. CONCLUSION

Nuclear safeguards systems in the United States have been successful in preventing the theft or diversion of SNM. Isolated minor incidents have occurred, but these have been quickly resolved. The existence of today's sophisticated and mature nuclear safeguards systems is in large part due to the recognition that the misuse of nuclear materials could have serious impacts on public health and safety and national security.

The area of international safeguards represents a major step forward in international cooperation. Until the recently signed (1987) treaty between the United States and the Soviet Union on the elimination of intermediate and short-range missiles (INF Treaty), international safeguards remained the only area where nations permitted on-site inspection of activities and facilities by foreign representatives. The continued strengthening of IAEA safeguards is an essential measure in reducing the spread of nuclear weapons.

SEE ALSO THE FOLLOWING ARTICLES

NUCLEAR FACILITIES EMERGENCY PLANNING • NUCLEAR FUEL CYCLES • NUCLEAR POWER REACTORS • NUCLEAR RADIATION DETECTION DEVICES • NUCLEAR REACTOR MATERIALS AND FUELS • RADIATION PHYSICS • RADIATION SOURCES • RADIATION SHIELDING AND PROTECTION • RADIOACTIVE WASTES

BIBLIOGRAPHY

Code of Federal Regulations, Title 10—Energy, Chapter 1—Nuclear Regulatory Commission, Parts 50, 70, 73, and 75, Published by the Office of the Federal Register, National Archives and Records Service, General Services Administration, Washington, DC, Revised as of January 1, 1998.

IAEA. (1968). "The Agency's Safeguards," INFCIRC/66/Rev. 2, 16 September. International Atomic Energy Agency, Vienna.

IAEA. (1998). "Model Protocal Additional to the Agreement(s) between State(s) and the International Atomic Energy Agency for the Application of Safeguards," INFCIRC/540 (Corrected), December. International Atomic Energy Agency, Vienna.

IAEA. (1972). "The Structure and Content of Agreements Between the Agency and States Required in Connection with the Treaty on the Non-Proliferation of Nuclear Weapons," INFCIRC/153 (Corrected), June. International Atomic Energy Agency, Vienna.

Indusi, J. P., and Marcuse, W. (1974). Institute of Nuclear Materials Management, Inc., *Proceedings of the 15th Annual Meeting*. "A Method to Determine the Minimum Cost Measurement Plant Consistent with Any Feasible Limit of Error on MUE," Brookhaven National Laboratory. June 19–21.

Jaeck, J. L. (1973). Statistioal Methods in Nuclear Material Control, #TID-26298. U.S. Dep. of Commer. Nat. Tech. Infor. Serv., Springfield, Virginia.

Marcuse, W., and Indusi, Joseph, P. (1975). Simulating Physical Protection Against Overt Attacks at Facilities Using, Processing, or Storing Nuclear Materials, "Proceedings of the 16th Annual Meeting," Institute of Nuclear Materials Management, Inc. Brookhaven National Laboratory, June 18–20.

U.S. Department of Energy. (1999). "Control and Accountability of Nuclear Materials," DOE ORDER 474.1, August 8 and Mannual 474.i–1.

U.S. Department of Energy. (1994). "Protection and Control of Safeguards and Security Interests," DOE ORDER 5632.1C, July 15 and Mannual 5632.1C–1.



Radiation Shielding and Protection

Robert W. Roussin (Retired)
Bernadette L. Kirk
David K. Trubey (Retired)
Oak Ridge National Laboratory

I. Background
II. Types and Sources of Radiation
III. Neutral Particles and Matter
IV. Effects of Radiation
V. Analyzing Radiation Transport
VI. Deterministic Methods for Analyzing Radiation Transport
VII. Monte Carlo Methods for Analyzing Radiation Transport
VIII. Adjoint Methods
IX. Verification of Calculations
X. Radiation Detection Methods
XI. Computing Technology for Radiation Transport
XII. Radiation Shielding and Protection
XIII. Appendix A: Computer Codes for Radiation Transport
XIV. Appendix B: Computer Codes for Cross-Section Preparation
XV. Appendix C: Computer Codes for Response Determination and Energy Spectra Unfolding
XVI. Appendix D: Data Libraries for Radiation Transport Analysis

GLOSSARY

Absorbed dose Energy imparted to matter in a volume element by ionizing radiation divided by the mass of irradiated material in that volume element. The SI derived unit of absorbed dose is the gray (Gy) (1 GY = 100 rad = 1 J/kg). (Also commonly called dose.)

Activity Number of spontaneous nuclear disintegrations occurring in a given quantity of material during a suitably small interval of time divided by that interval of time. The SI derived unit of activity is the becquerel (Bq). (Also called disintegration rate.)

Albedo Probability under specified conditions that a particle entering into a region through a surface will return through that surface.

Attenuation coefficient Of a substance, for a parallel beam of specified radiation: the quantity μ in the expression $\mu\,\delta x$ for the fraction removed by attenuation in passing through a thin layer of thickness δx of that substance. It is a function of the energy of the radiation.

As δx is expressed in terms of length, mass per unit area, moles, or atoms per unit area, μ is called the linear, mass, molar, or atomic attenuation coefficient, respectively.

Benchmark experiment Well-documented experiment designed to provide results for validation of a computational method or data library.

Buildup factor In the passage of radiation through a medium, the ratio of the total value of a specified radiation quantity at any point to the contribution to that value from radiation reaching the point without having undergone a collision.

Cross section Measure of the probability of a specified interaction between an incident radiation and a target particle or system of particles. It is the reaction rate per target particle for a specified process divided by the flux density of the incident radiation (cross section, microscopic). In reactor physics the term is sometimes applied to a specified group of target particles, for example, those per unit volume (cross section, macroscopic), or per unit mass, or those in a specified body.

Current Vector such that its component along the normal to a surface at a point equals the net number of particles crossing that surface in the positive direction per unit area per unit time.

Discrete ordinates Finite-difference multigroup method of approximating the integrodifferential form of the Boltzmann transport equation. The direction variable is evaluated at discrete angles while the other variables are evaluated for mesh intervals.

Dose equivalent Product of absorbed dose, quality factor, distribution factor, and other modifying factors necessary to obtain an evaluation of the effects of irradiation received by exposed persons, so that the different characteristics of the different types of radiation are taken into account. It is commonly expressed in rems. The SI unit coming into use is the sievert (1 Sv = 100 rem).

Evaluated cross section Recommended cross-section data set usually based on multiple measurements and/or theoretical calculations, which provides all the necessary data for the entire energy range needed for a transport theory calculation.

Exposure For γ radiation in air, the sum of the electrical charges of all of the ions of one sign produced in air when all electrons liberated by photons in a suitably small element of volume of air are completely stopped in air, divided by the mass of the air in the volume element. It is commonly expressed in roentgens.

Flux (flux density) At a given point in space, the number of particles incident per unit time on a suitably small sphere centered at that point divided by the cross-sectional area of that sphere. It is identical with the product of the particle density and the average speed.

Kerma Sum of the initial energies of all the charged particles released per unit mass of material from interactions of indirectly ionizing radiation (primarily neutrons and photons).

Monte Carlo Numerical method that employs the use of random variables to determine expected values. As used in solving the Boltzmann transport equation, the method models the diffusion of the radiation particles.

Multigroup Numerical method that divides a neutron population into a finite number of neutron energy groups.

Sensitivity analysis Computation whose purpose is to determine the change in a dependent variable due to a differential change in an independent variable.

Transport Movement of radiation from a source to a region of interest.

RADIATION SHIELDING allows mankind to exploit a variety of uses of nuclear energy. It is used to protect workers, the general public, and radiation-sensitive equipment from sources of radiation, both natural and man made. Society's increasing use of radiation-producing equipment and the increasingly stringent radiation regulations mandate effective shielding.

Rediation protection is concerned with both internal sources (ingested or inhaled radioactivity) and external sources. These external sources vary from nuclear reactors and other equipment used in the nuclear power industry to hospital accelerators to released radioactivitiy from accidental discharge. The shielding of external sources is concerned primarily with penetrating radiation, mainly neutrons, γ rays, and X rays since electrically charged radiation such as β and α rays do not present a significant shielding problem unless their energies are extremely high. Particles of high energy are found near accelerators and in space, but this topic will not be discussed in this article.

Shielding is a branch of nuclear engineering. It is defined as the branch of engineering. including the underlying research, concerned with the design and analysis of shields. The shielding engineer is concerned with the selection of materials and specification of their dimensions to reduce the radiation dose rate to acceptable levels, given particular sources.

I. BACKGROUND

The science and art of shielding evolved concurrently with the development of nuclear science. Prior to the development of nuclear reactors, shielding was concerned mostly with X-ray sources, and lead was the usual choice of shielding material. It is extremely effective as an X-ray

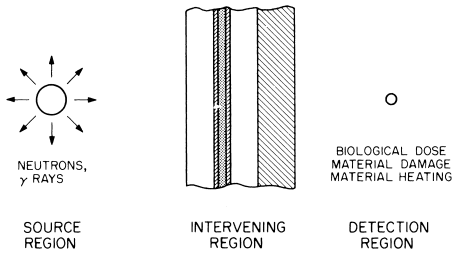

FIGURE 1 Typical configuration for a radiation transport (shielding) problem.

shield and relatively inexpensive. With the development of nuclear energy came new requirements. There was a need for neutron shields with high performance (light weight for mobile reactors), and resistance to a hostile environment (radiation, temperature, exotic materials). Most research has been conducted for programs such as nuclear-powered ships and aircraft, defense against nuclear weapons, and fast breeder reactors. The resulting general knowledge, however, has been applied in many fields such as the light-water reactor industry and medical facilities.

A typical shielding problem configuration is depicted in Fig. 1. It is characterized by a source region, an intervening region, and a detection region. The intervening region between source and detector may include shields, pipes with coolants, and structural or other materials that will attenuate the source radiation and at the same time generate secondary radiation. In the detection region various types of responses may have to be considered. The exposure to personnel in this area has to be kept as low as practical. Components in equipment may be subject to damage that may hinder their operation. Thus, both biological and material damage are of interest in the detection region.

The mechanism of radiation transport is well understood. The key boby of knowledge is contained in numerical values of the cross section data that give the probabilities of different types of radiation interaction with the various nuclear species. These data provide information on both the radiation and nuclear states after an interaction and make possible the detailed calculations of the transport of radiation from a source to a detector position, the radiation having suffered many interactions on its journey to the detector or absorber.

Thus the main thrust of the research and development for more than 30 years has been the following:

1. To develop cross-section data for all the needed materials, by experiment and theory
2. To develop the complex, computerized numerical methods to compute the transport
3. To test the methodology and data by experiment

Such experiments can be used to verify a design using a mockup or to establish results for a well-documented configuration as a test case or "benchmark problem."

II. TYPES AND SOURCES OF RADIATION

Radiations are classified in several ways, but all types involve the radiant transfer of energy from a source to other locations. Frequently through intervening material. We will be concerned with ionizing radiations, that is, radiations that have the capability of interacting with matter, depositing energy, and causing ion pairs to form by removal of electrons from atoms or molecules of the medium. The common ionizing radiations are X rays, γ rays, neutrons, and charged particles, particularly electrons, protons, and α particles. In all cases, the source energy spectrum is the most important information needed to predict the radiation transport and spatial energy deposition.

A. X Rays

X rays and γ rays are electromagnetic waves that travel at the speed of light. They are distinguished by their origin; that is, X rays have an atomic origin while γ rays have a nuclear origin. Generally, X rays have a lower energy, and thus are less penetrating, than γ rays. Although both behave as waves and can undergo diffraction, it is better, for shielding analyses, to consider these radiations as neutral particles, that is, photons.

In general, any stream of fast moving, that is high-energy, electrons—no matter how they are formed—will produce X rays when they are slowed down upon striking a suitable material. The energy spectra of characteristic X rays, caused by the raising of one or more inner electrons from their quantum level(s) to higher levels and the subsequent filling of the vacancy by another orbital electron, vary with material. The discrete energy levels in the atomic structure thus give rise to discrete "lines" in the X-ray spectrum. Characteristic X rays also frequently accompany γ rays from radioactive decay.

A continuous spectrum is created by the bremsstrahlung, literally "braking radiation," mechanism as the charged particles are slowed down in the material. Since photon interaction give rise to energetic charged particles (see Section III), and charged particle reactions give rise to X rays, a charged particle–photon cascade is created until all the source energy has been absorbed by the material, giving rise to heating and other effects.

Typical sources of X rays that require shielding are medical diagnostic or therapeutic installations utilizing X-ray tubes. X-ray tube potentials used in diagnostic

installations generally range from 25 to 150 kV, whereas therapy installations are frequently in the megavoltage range. X-ray shielding may also be required at accelerator installations. Shielding procedures are comprehensively described in several reports issued by the National Council on Radiation Protection and Measurements (NCRP).

B. g Rays

As mentioned above, γ rays originate in the atomic nucleus. The γ rays created in the process of radioactive decay are frequently considered primary as opposed to those created by neutron–nucleus interactions, which are called secondary γ rays.

Most elements have isotopes that are unstable, that is, they are subject to radioactive decay. Such isotopes statistically exhibit exponential decay, that is, a certain fraction of the atoms present may be expected to decay per unit time. This is often described by saying that the isotope has a "half life"; half of the material present will decay during that amount of time. Half lives vary from less than a second to thousands of years.

When a nucleus (isotope) decays, a β particle (electron) or an α particle (helium nucleus) is ejected, depending on the properties of the nuclide. Many transitions leave the secondary (daughter) nucleus in a high-energy (excited) state, and the excess energy is emitted as γ radiation. Only certain energy states are possible for a given nucleus, and therefore the γ rays emitted are of discreate energies. For example, ^{60}Co emits two γ rays of energies, 1.17 and 1.33 MeV.

The intensity of a radioactive source is defined in terms of the disintegration rate in becquerels where 1 Bq is equal to 1 disintegration per second. Another (non-SI) unit still in use is the curie (Ci) where $1\ \text{Ci} = 3.7 \times 10^{10}$ Bq.

There are many kinds of γ ray sources. Natural radioactivity, primarily occurring in three distinct series (thorium, uranium, and actinium), gives rise to γ rays everywhere on earth.

Nuclear reactors produce copious sources of γ rays by several mechanisms. The fission reaction provides a spectrum of prompt γ rays approximately proportional to $\exp(-1.1E)$, where E is the γ-ray energy in MeV units, In addition, the fission products are intensely radioactive with their gross spectrum and decay rate changing with time. The fission products are the primary source of radiation after a reactor is shut down.

When neutrons are absorbed, the resulting product nucleus is often radioactive. Therefore a nuclear reactor's internal structural materials absorb neutrons and are activated. Nuclear reactions also produce γ rays. For example, secondary γ rays are produced by neutron inelastic scattering in nuclear reactors as neutrons are moderated (slowed down) in the core, moderator, coolant, and shield. Accelerators are also sources of γ rays from nuclear interactions and the resulting activation.

C. Neutrons

Neutrons are neutral particles with a rest mass approximately the same as a proton. The most common sources of neutrons are nuclear chain reactors. Neutrons are also created in large quantities in some accelerators and in certain material mixtures by (α, n) reactions. This type of reaction is utilized in building small sources using, for example, a mixture of polonium and beryllium where the α particle from the polonium reacts with the beryllium. This (α, n) reaction also leads to a neutron hazard from irradiated fuel elements which contain α-emitting actinides (actinium or elements higher than actinium in the periodic table). The element californium and a few other heavy nuclides will spontaneously fission, and therefore can be used as small sources of fission neutrons. A few nuclides, such as ^{2}H and ^{9}Be, can be a source of neutrons from the photoneutron reaction,that is, (γ, n).

The energy dependence of the fission neutron spectrum reaches a maximum (most probable energy) at about 0.7 MeV, but the more penetrating higher energies generally dominate shielding requirements. The spectrum is often described by a Maxwellian distribution.

$$N(E) = 2\pi^{-1/2} T^{3/2} E^{1/2} e^{-E/T}, \tag{1}$$

where $N(E)$ is the number of neutrons per unit energy about E and T a parameter equal to 2/3 of the average energy. The value of T for ^{235}U is 1.29. The number of neutrons per thermal neutron-induced fission is about 2.4 for ^{235}U. The number increases linearly with the energy of the neutron inducing the fission.

D. Charged Particles

Charged particles do not constitute a shielding problem unless they are of the very high-energy type from accelerators or outer space. β and α particles are a significant hazard only if ingested or inhaled, although they can cause skin damage.

We will not consider the shielding of charged particles here except to mention that the slowing down is characterized by a stopping power (dE/dx). The stopping power, that is, energy loss per unit distance, implies an average spatial range, and, thus, the stopping power is the most important shielding quantity. It depends on energy and material.

III. NEUTRAL PARTICLES AND MATTER

The solution of radiation transport problems requires an understanding of laws controlling the interactions of "particles" with material. These interaction laws must then be applied to solve the statistical problem of determining the distribution of radiation as a function of position, energy, direction, and time. Of primary interest in shielding problems are neutrons and high-energy photons, which can be loosely classified as "neutral particles" because they have no net electric charge. As a result, these are more likely to penetrate deeper into material than charged particles such as α and β particles, which interact continuously with atomic electrons in the shield material. In general, neutrons interact with nuclei, and photons interact with electrons of the shield material atoms. Although the specific interaction laws are different for neutrons and photons, common criteria govern most applications of interest. First, the motion of neutral particles can be determined by well-known interactions with nuclei (or electrons) of shield atoms as particle–particle interactions are assumed negligible. Second, neutral particles move between interactions in a straight line at constant energy. Third, the probability of an interaction per unit path length of travel is constant for a neutral particle. Fourth, if an interaction occurs, particles emerge from that interaction at the same position in space.

A. Cross Sections

The probability of an interaction per unit path length that a particle travels depends on the type and density of the material being traversed and the energy of the particle. In fact this probability, called the macroscopic cross section, $\Sigma(E)$, is defined as (for a shield material with k different types of atoms)

$$\Sigma(E) = N_1\sigma_1(E) + N_2\sigma_2(E) + \cdots + N_k\sigma_k(E), \quad (2)$$

where N_I is the number of atoms of the Ith type per unit volume and $\sigma_I(E)$ the interaction (microscopic) cross section for particles of energy E given in units of 10^{-24} cm^2 called "barns." In water, for example, there are two types of atoms that could be encountered by traversing particles: hydrogen and oxygen. Note that the interaction cross section depends on the type of atom and the energy (E) of the particle. The inverse of the macroscopic cross section is sometimes referred to as the mean free path, the mean distance traveled to a collision.

When a particle has an interaction with an atom it may be captured, in which case it disappears, or it may be scattered, in which case it emerges from the collision with a different energy and direction. Some of the capture and scattering processes may produce secondary radiation that must be accounted for in many shielding applications. The total interaction cross section is the sum of the cross sections for individual processes. Thus

$$\sigma_1(E) = \sigma_{1c}(E) + \sigma_{1s}(E) + \cdots + \sigma_{1x}, \quad (3)$$

where the subscripts c, s, and x, represent possible processes that could occur for a particle of energy E interacting with the Ith type of atom.

Cross sections can be very complicated functions of energy. An example of the total cross section of iron for neutrons with energies between 1 keV and 15 MeV is shown in Fig. 2. Note the many peaks and valleys (minima) and the rapid variation with energy. For shielding problems, the minima are particularly important because the relatively low cross section means the probability of interaction is small and the particle will penetrate more easily. An example of the effect of the cross section on the energy distribution of neutrons is shown in Fig. 3 (which shows the initial shape of a combined 14 MeV and fission neutron source) and Fig. 4 (which shows the distribution after the neutrons have traveled about 99 cm from a point source in iron). The buildup of neutrons below 1 MeV is partly due to scattering processes that reduce the initial energy. The effect of the variation of cross section on the energy is, however, quite evident. An examination of Figs. 2 and 4 shows quite clearly that the peaks in the energy distribution correspond to mimina in the cross section.

For most nonaccelerator shielding problems, the particle energy range of interest extends up to about 20 MeV (1 MeV $= 1.6021 \times 10^{-10}$ J). The mean energy of neutrons produced in fission reactors is about 2 MeV while that for fusion (D-T) reactors is about 14 MeV. Photons produced in such facilities generally have energies below 20 MeV.

In the United States there is a concerted effort to measure, evaluate, compile, test, and distribute a comprehensive library of cross-section data that serve as the basis for describing radiation transport in this energy range. The Cross Section Evaluation Working Group (CSEWG), consisting of scientists and engineers from government laboratories and private industry, and originally sponsored by the Department of Energy, is responsible for this Evaluated Nuclear Data File (ENDF). The data are maintained by the National Nuclear Data Center (NNDC) at Brookhaven National Laboratory.

B. Scattering Processes

Neutrons that interact and emerge from a nucleus remaining in its original state are said to undergo elastic scattering. If a neutron has enough energy it may undergo inelastic scattering such that after the neutron emerges the nucleus is left in an excited state which then deexcites by

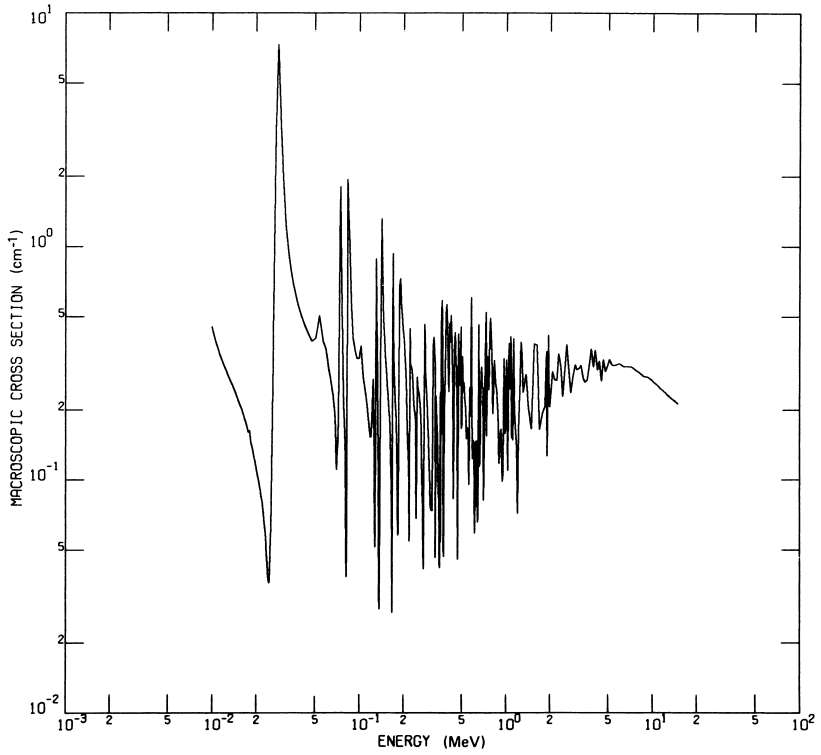

FIGURE 2 Variation of the total cross section of iron from 10 keV to 15 MeV.

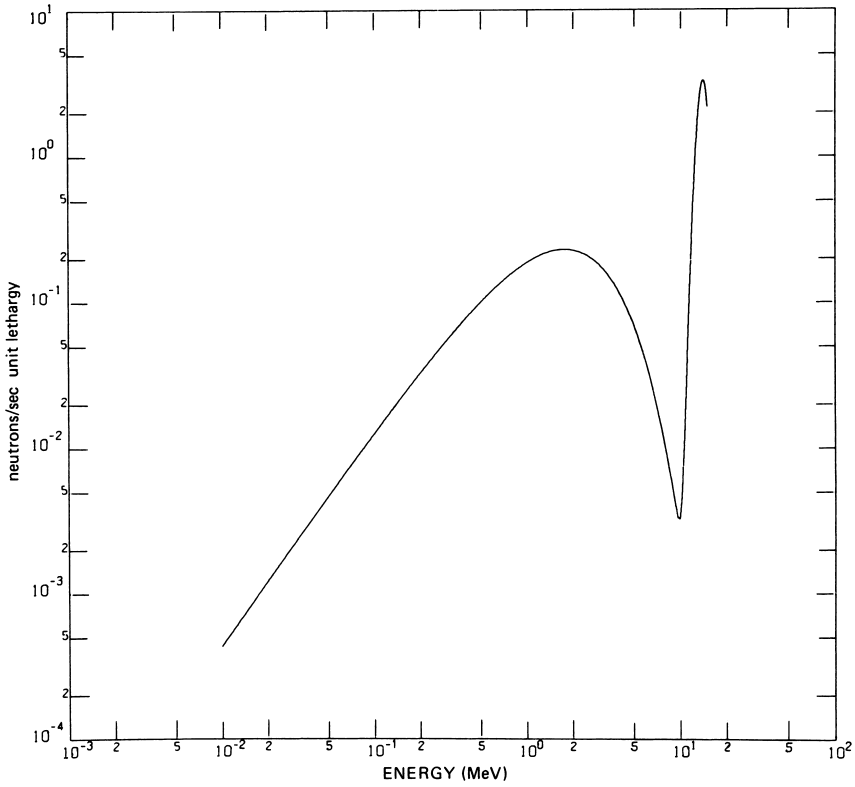

FIGURE 3 Energy distribution of a combined 14 MeV and fission neutron source.

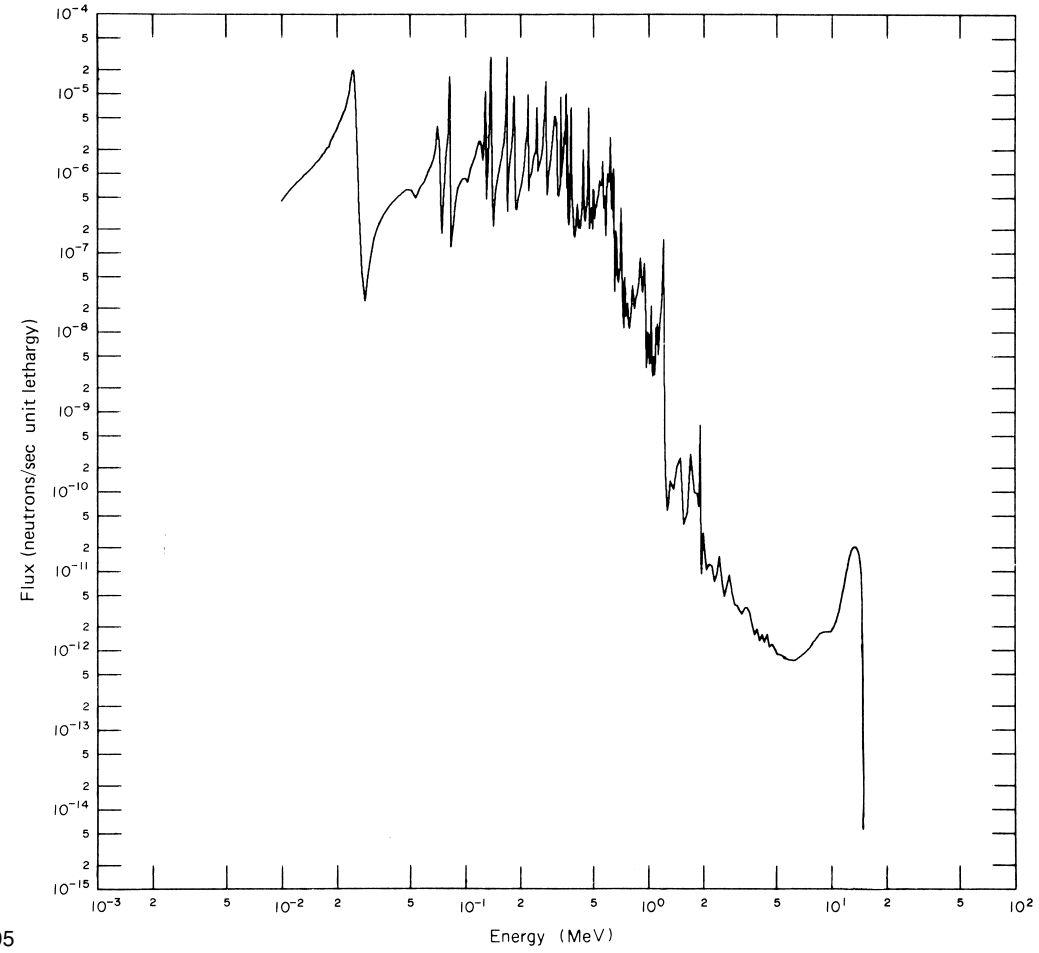

FIGURE 4 Calculated energy distribution of neutron scalar flux in iron 99 cm from a point source of 14 MeV and fission neutrons.

photon emission. For either case the energy and direction of the emergent neutron can be determined from data contained in ENDF, namely the cross section at the incident energy and the angular distribution of scattered neutrons. The kinematics of the process are well understood and a correlation exists between the energy and direction of the emergent neutron. If deexcitation occurs by the emission of one or more charged particles and/or neutrons, some degree of approximation is normally made. Generally the energy distribution of the emergent neutron(s) is tabulated in ENDF and isotropic angular scattering in the laboratory system is assumed.

For most shielding applications the assumption is made that photons scatter by interaction with individual electrons that surround the nucleus of the atom. The process, called Compton scattering, assumes that the energy that binds the electron to the atom is negligible compared to that of the incident photon. An analytic representation of this process, the Klein–Nishina equation, adequately describes the process for all atoms. At incident photon energies above 1.022 MeV the production of a positron and electron is possible (pair production). Two photons with energy of 0.511 MeV each are formed when the positron annihilates. These two photons are usually assumed to be emitted isotropically in the lab system for most shielding applications.

C. Secondary Radiation Production Processes

Nonelastic interactions of neutrons with nuclei can, as was mentioned in the previous section, give rise to the emission of photons when the residual nucleus deexcites. These secondary photon production processes can be very important for shielding problems. The secondary production can occur for high-energy neutron interactions such as inelastic scattering and other nonelastic processes where deexcitation occurs by the emission of a charged particle (e.g., a proton) from the nucleus. Such photons have energy on the order of 1 MeV. The neutron capture process,

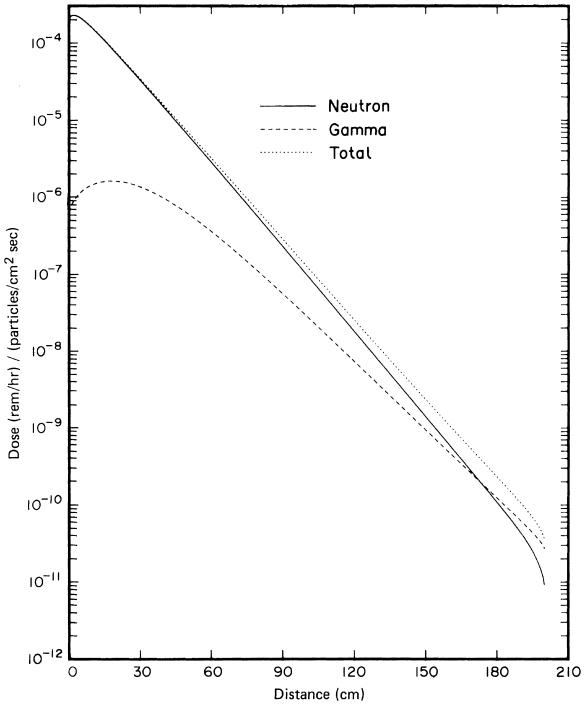

FIGURE 5 Calculated spatial distribution of neutron and secondary photon dose in a concrete slab with fission neutrons impinging on one face.

however, results in the emission of photons on the order of several MeV. The capture process predominates at lower incident neutron energies. Thus, it is very important to keep track of neutrons of all energies in order to accurately predict the production of secondary photons in a shield material. This secondary photon production is often quite important for shielding problems. An example is shown in Fig. 5, which depicts the spatial distribution of the total dose (neutrons plus secondary photons) in a concrete slab with fission neutrons incident on one face. It can be seen that at a distance of about 170 cm, secondary photon dose begins to dominate.

Higher photon energies (6 to 20 MeV) may interact with the nucleus of an atom and produce neutrons. These "photoneutron" production events can usually be ignored for most shielding applications.

D. Boltzmann Equation for Radiation Transport

The general description of the particle population starts with a balance relation. For the assumptions listed at the beginning of this section, this relationship leads to an integrodifferential equation of the Boltzmann type in terms of a flux density $\phi(\mathbf{r}, E, \mathbf{\Omega})$, that is differential in energy and direction variables. This function, when combined with appropriate macroscopic cross sections, can be used to define $R(\mathbf{r})$, the interaction rate per unit volume and time as

$$R(\mathbf{r}) = \int_E dE \int_\Omega d\mathbf{\Omega} \Sigma_R(\mathbf{r}, E)\, \phi(\mathbf{r}, E, \mathbf{\Omega}). \qquad (4)$$

The flux density is defined such that $\phi(\mathbf{r}, E, \mathbf{\Omega})\, dE\, d\mathbf{\Omega}$ is the probable number of particles at point $\mathbf{r}$ in solid angle $d\mathbf{\Omega}$ about $\mathbf{\Omega}$, with energies in interval dE about E, per unit area perpendicular to $\mathbf{\Omega}$, per unit time. The population balance (assuming no net change as a function of time) states that for an elemental spatial volume at $\mathbf{r}$, the net loss of particles of energy E going in direction $\mathbf{\Omega}$ is equal to the net gain, and consists of four components. The net loss is due to (1) outflow plus (2) interactions that remove particles completely or change their energy and/or direction. The net gain is due to (3) interactions in the elemental volume of particles at different energies/directions whose interactions result in particles of energy E and direction $\mathbf{\Omega}$, and (4) sources in the spatial volume at $\mathbf{r}$ (external sources). The resulting equation is as follows:

$$\underset{(1)}{\mathbf{\Omega} \cdot \nabla \phi(\mathbf{r}, E, \mathbf{\Omega})} + \underset{(2)}{\Sigma(\mathbf{r}, E)\, \phi(\mathbf{r}, E, \mathbf{\Omega})}$$
$$= \underset{(3)}{\int_{E'} dE' \int_{\Omega'} d\mathbf{\Omega}' K(\mathbf{r}, E'; E, \mathbf{\Omega}'; \mathbf{\Omega})\, \phi(\mathbf{r}, E', \mathbf{\Omega}')}$$
$$+ \underset{(4)}{Q(\mathbf{r}, E, \mathbf{\Omega})}. \qquad (5)$$

The differential operator $\mathbf{\Omega} \cdot \nabla$ is, in general, a complicated function of the spatial coordinate system in which the radiation transport problem is expressed. The quantity K is defined such that $K(\mathbf{r}, E'; E, \mathbf{\Omega}'; \mathbf{\Omega})\, \phi(\mathbf{r}, E', \mathbf{\Omega}')\, dE\, d\mathbf{\Omega}$ is the probable number of particles produced per unit of volume and time in dE and $d\mathbf{\Omega}$ due to interactions of particles of energy E' and direction $\mathbf{\Omega}'$. The integration over E' and $\mathbf{\Omega}'$ is required to account for all possible contributions. The term $Q(\mathbf{r}, E, \mathbf{\Omega})$ is the external source per unit energy, angle, and volume, that is, particles that are not produced by interactions of the radiation field itself.

Exact solutions of the Boltzmann equation for neutral particles exist only for simplified cases of little practical use for shielding applications. However, many approximate methods have been successfully applied, particularly for photon transport, with substantial success (see Section V). In addition, the use of digital computers has allowed satisfactory numerical solutions using deterministic as well as stochastic, that is, statistical, techniques.

E. Integral Boltzmann Equation

A different form of the Boltzmann transport equation governing radiation transport can be derived by considering the contribution, from all other points in the system, to

the particle flux at a given point in a system. This can be expressed as

$$\phi(\mathbf{r}, E, \mathbf{\Omega}) = \int_{\mathbf{r}'} d\mathbf{r}' S(\mathbf{r}', E, \mathbf{\Omega}) T(E, \mathbf{r}'; \mathbf{r}), \qquad (6)$$

where $S(\mathbf{r}', E, \mathbf{\Omega})\, dE\, d\mathbf{\Omega}$ represents the emission of particles per unit volume and time with energies in interval dE about E and directions in solid angle interval $d\mathbf{\Omega}$ about $\mathbf{\Omega}$, and $T(E, \mathbf{r}'; \mathbf{r})$ the probability that particles emitted in unit volume at $\mathbf{r}'$ with energy E in dE will not have a collision between $\mathbf{r}'$ and $\mathbf{r}$. The emission density $S(\mathbf{r}', E, \mathbf{\Omega})$ consists of particles from scattering and external sources and can be expressed as

$$S(\mathbf{r}', E, \mathbf{\Omega}) = \int_{E'}^{dE'} \int_{\Omega'}^{d\Omega'} \phi(\mathbf{r}', E', \mathbf{\Omega}') K(\mathbf{r}', E'; E, \mathbf{\Omega}'; \mathbf{\Omega}) + Q(\mathbf{r}', E, \mathbf{\Omega}), \qquad (7)$$

where K and Q have the same definition as was used to develop the form of the Boltzmann equation introduced in the previous section. Substitution of S into the equation for ϕ yields

$$\phi(\mathbf{r}, E, \mathbf{\Omega}) = \int_{\mathbf{r}'} d\mathbf{r}'\, T(E, \mathbf{r}'; \mathbf{r}) \left[\int_{E'}^{dE'} \int_{\Omega'}^{d\Omega'} \phi(\mathbf{r}', E', \mathbf{\Omega}') \times K(\mathbf{r}', E'E, \mathbf{\Omega}'; \mathbf{\Omega}) + Q(\mathbf{r}', E, \mathbf{\Omega}) \right]. \qquad (8)$$

The transmission probability T is given by

$$T(E, \mathbf{r}'; \mathbf{r}) = \exp\{-[|\mathbf{r}' - \mathbf{r}| \Sigma(E, \mathbf{r}'; \mathbf{r})]\} \qquad (9)$$

where the quantity in square brackets is the number of mean free paths the particle with energy E is required to travel from point $\mathbf{r}'$ and $\mathbf{r}$.

Both the integral and integrodifferential forms of the Boltzmann equation involve the same fundamental quantities ϕ, Q, K, and T and are, in fact, equivalent. Most numerical deterministic methods used for shielding applications start from the integrodifferential form, but a few are based on the integral form. The Monte Carlo approach, which is stochastic in nature, proceeds in a manner that follows the logical development of the integral equation.

IV. EFFECTS OF RADIATION

A. Biological Effects

Although the subject of much research, especially since World War II, the science of radiobiology is still in its infancy, and very few fundamental principles concerning it are known. When biological material is irradiated, a certain amount of radiation energy is locally absorbed by the constituent atoms and molecules of the material. The biological effects of radiation are the ultimate result of a long chain of events with the local absorption of energy being the initial step.

When a charged particle passes through any material, it leaves a track of excited and ionized atoms and molecules. The deposition of energy releases along the track is described by the rate of linear energy transfer referred to as LET which is usually measured in keV/μm of track. The LET of an ionizing particle depends in a complicated way on the energy, mass, and charge of the particle. In general, LET values decrease with energy and increase with mass and charge. Biological effects, in turn, depend strongly on the LET of the particle, the nature of the biological system, and the type of damage being observed.

Neutral particles, for example, neutrons and photons, are indirectly ionizing, that is, energy is transferred to charged particles which in turn deposit energy with their characteristic LET. The quantity used to describe the transfer of energy to the charged particles is called "kerma" and is generally expressed in units of J/kg, grays (1 J/kg), or MeV/g. Further details are given in the section below.

In considering the biological effects of ionizing radiations from external sources, it is necessary to distinguish between an "acute" exposure and a "chronic" or extended exposure. In an acute exposure, the radiation dose is received in a relatively short time. If the dose rate is not too large and the exposure occurs over an extended period, the body can achieve partial recovery from many of the possible consequences. The injury caused by a certain dose will also depend on the extent and part of the body exposed.

In order to describe radiation effects in quantitative terms, it is necessary to define appropriate units. The first quantity defined, adopted in 1928, was the roentgen, the unit of exposure. The word "exposure," used here in the strict sense as defined by the International Commission on Radiological Units and Measurements (ICRU), is used to describe the amount of ionization of dry air when irradiated by X or γ rays. The roentgen is defined as follows:

$$1\,\mathrm{R} = 2.58 \times 10^{-4}\,\mathrm{C\,kg^{-1}}$$

where C is the electrostatic charge in coulombs developed in the air.

Physical energy absorption is measured in J/kg, and the SI special unit of absorbed dose is the gray (Gy) where

$$1\,\mathrm{Gy} = 1\,\mathrm{J/kg}.$$

The older unit of absorbed dose, rad, is related to the gray as follows:

$$1\,\mathrm{rad} = 10^{-2}\,\mathrm{J/kg} = 10^{-2}\,\mathrm{Gy}.$$

The γ-ray absorbed dose in air has roughly the same value in rads as the exposure in roentgens.

The kerma is more easily calculated since the charged particle transport following the initial transfer of energy from the radiation need not be considered. It is usually

nearly equal to the absorbed dose at a given point, and most shielding calculations evaluate the kerma rather than the absorbed dose.

As mentioned above, different radiations have different LET values and, therefore, have different biological effects with the same absorbed dose. To compare radiation injury from several different radiations or a mixed field of radiation, the term relative biological effectiveness (RBE) is sometimes used. The RBE is defined as the dose of a standard radiation to produce a given biological effect divided by the dose of a test radiation to produce the same effect. In most comparisons, the standard radiation is taken as 200 kVp (the potential on the X-ray tube) X rays with a shielding half value layer of about 1.5 mm Cu. The RBE depends on the radiation being tested and the type of biological effect that is being observed. For example, if cataract initiation by neutrons is considered, the RBE is about 10. For a massive neutron dose that may result in death, the RBE may be as low as 2.

The absorbed dose can be weighted by a number of dimensionless factors in such a way that the absorbed dose thus modified correlates with the magnitude or probability of a biological effect better than does the absorbed dose alone. The modified dose is called the dose equivalent, H, when the various modifying factors are those recommended by the International Commission on Radiological Protection (ICRP). The dose eqivalent is defined by the equation

$$H = DqN, \tag{10}$$

where D is the absorbed dose, q the quality factor, and N the product of any further factors. At present $N = 1$. The SI unit of dose equivalent is the Sievert. It is related to the older unit rem as follows: $1\,\text{rem} = 10^{-2}$ Sv or $1\,\text{mSv} = 100$ mrem.

The quality factor q is intended to allow for the influence of radiation quality (LET) or biological effect. As a simplification, q is generally taken to be 1.0 for β rays, X rays, and γ rays, frequently 10 for fast neutrons, and 10–20 for α rays.

If the leakage spectrum is available from a radiation transport calculation, the dose equivalent can be computed by integrating the product of the flux density and a standard response function over energy. Such so-called "flux-to-dose" functions are published by the American National Standards Institute and ICRP. These functions are based on calculations of energy deposition in idealized representations of humans (phantoms composed of tissue). They are designed to be conservative by assuming values corresponding to the maximum dose that occurs near the surface of an irradiated body.

The most recently published dose equivalent limits appearing in ICRP Publication 26 (1977) are 50 mSv per year for radiation workers and 5 mSv per year for a member of the public. This limit is in addition to the dose from natural sources and from medical procedures.

B. Heating and Damage to Material

Heating of shields and construction materials is of concern because of the introduction of thermal stresses and other deleterious effects on materials. An example of the latter is the dehydration of concrete at temperatures above about 90°C. The effect of heating, principally by fission product β rays, but also γ rays, is of great concern in nuclear reactor safety. Without cooling, nuclear reactor fuel elements will melt, resulting in the release of fission products.

The volumetric heat generation rate (h) in a material is the absorbed dose multiplied by its density. If it is assumed that the kerma is a good approximation to the dose rate, the heat generation is given by

$$h(r) = \int_E dE\; k(E)\,\phi(\mathbf{r}, E), \tag{11}$$

where $\mathbf{r}$ is the spatial position vector, E the energy, $\phi(\mathbf{r}, E)$ the flux density spectrum, and $k(E)$ the kerma factor for the particular material. The kerma factor is the product of the cross section for each reaction and the average amount of energy transferred by the reaction. The flux density, of course, must be determined by transport calculations. The temperature distribution can then be determined by heat transfer theory.

In addition to effects due to a temperature increase, materials such as steels suffer radiation induced hardening and embrittlement, especially under fast-neutron irradiation. Radiation damage is sensitive to the energy spectrum of the neutrons and to material cross sections for neutron interactions. Steels bombarded by fast neutrons also experience swelling and radiation induced creep.

Primary damage mechanisms are of two types: atomic displacements resulting in lattice defects, and changes at the molecular level. The former is the key damage mechanism in metals and the latter in nonmetals. A combination of both mechanisms is important for electrical components such as semiconductors and insulators.

Molecular effects originate with ionization and excitation along the tracks of secondary charged particles. Subsequent events lead to the production of charge carriers as well as mobile and reactive ionic, molecular, and free-radical species. Ultimately, there arise a variety of chemical changes. Water is dissociated by ionizing radiation, with products including H_2, O_2, and H_2O_2. Yields for each are on the order of one molecule per 100 eV of energy absorbed. The chemistry is complex and is sensitive to the pH value, the presence of solutes and dissolved gases in the water, and the nature of the primary radiation.

Organic materials, liquid and solid, may be very sensitive to radiation. Effects include polymerization, cross-linking, and chemical decomposition accompanied by gross changes in physical properties. Two important irradiation effects in hydrocarbons are gas evolution and viscosity increase. Aromatic hydrocarbons, because of their electronic structure, are relatively resistant to radiation. Saturated aliphatic hydrocarbons evolve H_2 under irradiation with yields of about five molecules per 100 eV of energy absorbed. Lubricating oils experience a 10–20% increase in viscosity at an absorbed dose of 10^6 Gy and a 75–500% increase at 5×10^6 Gy.

The more radiation-resistant plastics are those that are aromatic based (e.g., polystyrene) or those that cross-link (e.g., polyethylene). Less resistant are those that suffer polymer-chain breakage (e.g., Lucite, Teflon, and butyl rubber). The yields for H_2 evolution are 3.1 molecules per 100 eV for polyethylene and only 0.08 for polystyrene. Polyethylene retains 80% of its strength at about 10^7 Gy and polystyrene at about 10^9 Gy. On the other hand, Lucite retains only half its strength at 10^5 Gy.

Crystal lattice damage, through production of vacancies and interstitial atoms (point defects), results from neutron interactions, including (n, α) reactions and, only to a far lesser extent, from photon interactions. It is this type of damage that affects the mechanical properties of metals. Certain types of damage, such as swelling due to void formation and radiation-induced (or radiation-enhanced) creep in stainless steel, are effected by point defects. Other types of damage, such as increase of yield strength and reduction of ductility, are effected principally by clusters or agglomerates of defects, called displacement spikes. In steel for pressure vessels, the concern is with loss in ductility, especially as related to brittle fracture.

Production of vacancies and interstitial atoms represents a transfer from neutron kinetic energy to potential energy stored within the crystal lattice. Both vacancies and interstitials, especially the latter, are mobile at sufficiently high temperature, and their recombination is facilitated by annealing. Recovery of the potential energy as heat is of little consequence except in graphite where, because of low thermal conductivity, positive feedback may lead to an uncontrolled energy release (Wigner effect) with potentially catastrophic results.

Damage arises in insulators and semiconductors as a result of atomic displacements, whereby point defects serve as charge-carrier donors and traps. Transient effects in these materials are analogous to molecular effects. Irradiation creates secondary electron charge carriers and thus affects electrical properties.

Helium is produced in neutron-irradiated materials as a result of (n, α) reaction with ^{10}B or other nuclides, and in reaction chains such as $^{59}Ni + n \rightarrow {}^{59}Ni$, and $^{59}Ni + n \rightarrow {}^{56}Fe + {}^{4}He$. Helium-bubble formation is highly sensitive to temperature. For example, in stainless steels, no bubbles are formed below 650°C.

Above 800°C, bubbles do form along grain boundaries and cannot be removed by annealing. Helium formation in the high-temperature and fast-neutron environment of a sodium-cooled nuclear reactor core is responsible for embrittlement of stainless steel cladding of fuel elements. Helium formation is also of concern in the design of the inner walls of fusion power reactors.

Failure by fracture of a stressed metal may result from two general mechanisms. Ductile fracture, or stress rupture, occurs following plastic deformation at local stresses in excess of the ultimate tensile strength. Brittle fracture, in contrast, occurs abruptly with relatively slight plastic deformation.

Low-carbon structural steels, which have the ferritic body-centered-cubic crystal structure, exhibit a ductile–brittle transition temperature below which brittle fracture occurs. The nil ductility transition (NDT) temperature is highly sensitive to metallurgical treatment. It is typically near 0°C, but may range from −70 to +20°C. Neutron irradiation increases the NDT temperature, and this is a concern for reactor vessels exposed for many years to neutron irradiation. The neutron fluence to which the vessel is to be exposed during its lifetime must be taken into account in the metallurgical, fabrication, operational, and surveillance specifications for the vessel.

The embrittlement of low-carbon structural steel is quite distinct from that occurring in the stainless steels of the austenitic face-centered-cubic crystal structure. In the former, thorough annealing will restore ductility. In the latter, embrittlement due to helium-bubble formation, as well as carbide precipitation at grain boundaries, is promoted by neutron irradiation at high temperatures and is not relieved by annealing.

V. ANALYZING RADIATION TRANSPORT

A. Approximate Methods for Special Geometries

There are a number of methods of solving the Boltzmann transport equation, and several of them are briefly described in subsequent sections. All of them require considerable skill by the user and significant computer resources. Most also are limited to simple geometries or introduce statistical problems. Therefore, engineers frequently resort to approximate methods. By "approximate methods," we mean numerical algorithms not based directly on solving the Boltzmann transport equation. These generally involve the application of experimental data, such as albedos, or attenuation data calculated for infinite media.

The latter are used in so-called "point kernel" calculations. These usually involve an integration over the source volume of the product of the source strength and a transport kernel, a function proportional to the probability that a particle starting at one point will arrive at another point. Usually the kernel is a function of the source energy, the distance between a source and receiver point, and the material between the points.

As mentioned in Section III, the probability of interaction per unit distance traveled is the macroscopic cross section, Σ. Using this quantity, it can be shown that the uncollided flux density from a point isotropic source of unit strength in a homogeneous medium is given by

$$\phi_0(r) = \exp(-\Sigma r)/4\pi r^2, \tag{12}$$

where r is the distance from the source. This accounts only for the particles at the source energy that arrive at the point having experienced no interaction with the medium. There will also be particles arriving at the point at a lower energy due to either single or multiple scattering. The total flux density can be written as

$$\phi(r) = QB(\Sigma r)\exp(-\Sigma r)/4\pi r^2, \tag{13}$$

where Q is the source strength and B is the buildup factor, a function of material, energy, and distance. As defined in this manner, ϕ, the particle flux density, and therefore B, are not useful quantities because radiation effects depend on the energy spectrum. More useful buildup factors have been determined for computing integral quantities such as does equivalent or energy absorption. For example, the total dose rate from a point source of energy E is given by

$$D(r, E) = Q(E)B_{\mathrm{d}}(\Sigma r, E)\, d(E)\exp(-\Sigma r)/(4\pi r^2), \tag{14}$$

where $Q(E)$ is the source strength of energy E. B_{d} the dose buildup factor, $d(E)$ the flux-to-dose factor, and $\Sigma(E)$ the cross section at energy E.

Values of the buildup factor are determined from transport theory calculations. Typical values are given in Tables I–III for several materials. Buildup factor data are also available as coefficients and parameters for fitting functions that facilitate their use. One of the most used forms, the Taylor form, is a sum of exponentials that allows the buildup factor to be easily combined with the exponential transport kernel.

The above equations can be integrated analytically over source surfaces or volumes of simple shape. For example, Eq. (12) can be integrated over an infinite plane to give

$$\phi_0(z) = QE_1(\Sigma z), \tag{15}$$

where Q is the source strength per unit area on the plane, z the distance to the source plane, and E_1 the exponential

TABLE I Energy Transfer (Air Kerma) and Exposure Buildup Factors for an Isotropic Point Source in Water[a,b]

$\mu_0 r$	0.04	0.06	0.08	0.1	0.2	0.5	1	2	5	10	15
					[E_0 (MeV)]						
0	1	1.00	1.00	1.00	1.00	1.00	1.00	1.00	1.00	1.00	1.00
0.5	2.27	2.63	2.54	2.36	1.92	1.61	1.47	1.38	1.29	1.21	1.16
1	3.58	4.94	4.93	4.52	3.42	2.45	2.08	1.83	1.57	1.38	1.29
2	6.41	11.5	12.5	11.7	8.22	4.87	3.62	2.82	2.10	1.70	1.51
3	9.50	20.6	24.3	23.5	15.7	8.29	5.50	3.87	2.62	2.00	1.72
4	12.8	32.4	40.8	40.6	26.4	12.7	7.66	4.99	3.12	2.29	1.93
5	16.3	46.9	62.7	64.0	41.3	18.1	10.1	6.16	3.63	2.57	2.14
6	19.9	64.3	90.6	94.8	61.0	24.6	12.8	7.38	4.14	2.85	2.34
7	23.8	84.8	125	134	86.2	32.2	15.7	8.66	4.64	3.13	2.53
8	27.8	10.9	167	183	118	40.8	18.9	9.97	5.14	3.40	2.73
10	36.5	167	278	314	202	61.8	26.0	12.7	6.14	3.94	3.11
15	61.6	390	754	917	582	137	47.4	20.1	8.62	5.24	4.04
20	92.1	758	1,650	2,120	1,310	247	73.5	28.0	11.1	6.51	4.93
25	128	1,320	3,160	4,260	2,580	395	104	36.4	13.5	7.75	5.81
30	169	2,140	5,560	7,780	4,640	582	138	45.2	15.9	8.97	6.64
35	216	3,270	9,190	13,100	7,890	809	175	54.3	18.3	10.2	7.42
40	269	4,820	14,500	20,300	12,800	1,080	214	63.6	20.7	11.3	8.09

[a] From Chilton, A. B., Eisenhauer, C. M., and Simmons, G. L. (1980). "Photon point source buildup factors for air, water, and iron." *Nucl. Sci. Eng.* **73,** 97–107.

[b] The data were obtained from calculations for an energy-transfer (kerma) detector, but are valid for exposure detectors also with errors of less than a few percent.

TABLE II Exposure (Air Kerma) Buildup Factors for an Isotropic Point Source in Ordinary Concrete[a]

$\mu_0 r$	0.04	0.06	0.08	0.1	0.2	0.5	1	2	5	10	15
						[E_0 (MeV)]					
0	1.00	1.00	1.00	1.00	1.00	1.00	1.00	1.00	1.00	1.00	1.00
0.5	1.30	1.68	1.84	1.89	1.78	1.57	1.45	1.37	1.27	1.19	1.15
1	1.46	2.15	2.58	2.78	2.72	2.27	1.98	1.77	1.53	1.35	1.26
2	1.69	2.89	3.96	4.63	5.05	4.03	3.24	2.65	2.04	1.64	1.46
3	1.87	3.54	5.31	6.63	8.00	6.26	4.72	3.60	2.53	1.93	1.66
4	2.01	4.17	6.69	8.80	11.6	8.97	6.42	4.61	3.03	2.22	1.86
5	2.14	4.77	8.09	11.1	15.9	12.2	8.33	5.68	3.54	2.51	2.07
6	2.25	5.34	9.52	13.6	20.9	15.9	10.4	6.80	4.05	2.80	2.28
7	2.34	5.90	11.0	16.3	26.7	20.2	12.7	7.97	4.57	3.10	2.50
8	2.45	6.44	12.5	19.2	33.4	25.0	15.2	9.18	5.09	3.40	2.71
10	2.62	7.52	15.7	25.6	49.6	36.4	20.7	11.7	6.15	4.01	3.16
15	2.98	10.2	24.3	44.9	109	75.6	37.2	18.6	8.85	5.57	4.34
20	3.27	12.7	33.8	69.1	201	131	57.1	26.0	11.6	7.19	5.59
25	3.51	15.2	44.3	97.9	331	203	80.1	33.9	14.4	8.86	6.91
30	3.73	18.2	55.4	131	507	292	106	42.2	17.3	10.6	8.27
35	3.91	21.9	66.8	170	734	399	134	50.9	20.5	12.3	9.63
40	4.03	26.5	78.1	214	1,020	523	164	59.8	24.8	14.5	10.9

[a] From Eisenhauer, C. M., and Simmons, G. L. (1975). "Point isotropic buildup factors in concrete." *Nucl. Sci. Eng.* **56,** 263–270.

integral function. Again, this form of Eq. (15) assumes a homogeneous medium.

Other approximate methods are based on a knowledge of the albedo or reflection probability. When values of the albedo are known, reflection and scattering problems can be solved by integrating the product of the incident flux density or current and the albedo and treating the reflection as a secondary source. Duct geometry and other streaming

TABLE III Exposure (Air Kerma) Buildup Factors for an Isotropic Point Source in Lead[a,b]

$\mu_0 r$	0.04	0.06	0.08	0.1	0.2	0.5	1	2	5	10
						[E_0 (MeV)]				
0	1.00	1.00	1.00	1.00	1.00	1.00	1.00	1.00	1.00	1.00
0.5	1.01	1.02	1.04	1.77	1.10	1.09	1.16	1.21	1.25	1.29
1	1.01	1.03	1.06	2.35	1.22	1.18	1.31	1.39	1.40	1.51
2	1.02	1.04	1.08	3.68	1.27	1.32	1.61	1.76	1.71	1.97
3	1.02	1.05	1.09	5.96	1.27	1.44	1.87	2.12	2.06	2.54
4	1.02	1.06	1.11	9.84	1.29	1.53	2.10	2.47	2.45	3.26
5	1.03	1.06	1.12	16.2	1.31	1.61	2.32	2.83	2.89	4.17
6	1.03	1.07	1.12	26.4	1.32	1.69	2.54	3.20	3.39	5.32
7	1.03	1.07	1.13	43.2	1.34	1.77	2.75	3.58	3.96	6.78
8	1.03	1.07	1.14	71.1	1.35	1.85	2.96	3.97	4.61	8.60
10	1.03	1.08	1.15	198	1.37	1.98	3.37	4.76	6.14	13.8
15	1.04	1.09	1.17	2,810	1.40	2.27	4.30	6.80	11.8	42.8
20	1.04	1.10	1.19	40,700	1.43	2.52	5.17	8.89	21.0	128
25	1.04	1.10	1.20	60(+4)	1.45	2.74	6.00	11.0	35.3	369
30	1.04	1.11	1.21	94(+5)	1.47	2.94	6.80	13.1	57.0	1,030
35	1.04	1.11	1.22	16(+7)	1.48	3.13	7.53	15.2	88.9	2,820
40	1.05	1.11	1.23	29(+8)	1.47	3.31	8.21	17.3	135	7,510

[a] Source for ($E_0 \leq 0.2$ MeV) data is unpublished data of G. L. Simmons and C. M. Eisenhauer. Source for ($E_0 \geq 0.5$ MeV) is Takeuchi, K., and Tanaka, S. (1985). Point isotropic buildup factors of gamma rays, including bremsstrahlung and annihilation radiation for water, concrete, iron, and lead. *Nucl. Sci. Eng.* **90,** 158–164.

[b] A number such as 60(+4) means 60×10^4.

problems can be treated in this way. Treating multiple reflections in this manner becomes laborious, and recourse to Monte Carlo methods to solve these multiple integrals is common. Albedos can be quite detailed functions of input and exit energies, directions, and material. Probabilities similar to albedos can be used to determine secondary γ rays emerging from a surface from neutrons that are entering.

B. Kernel Integration Methods for Photons

The point kernel, or kernel integration, method is used almost exclusively for photons. It is very seldom used for neutrons because the neutron cross section generally is a rapidly changing function of energy and nuclide, and no simple tabulation of buildup factors would be possible.

The method has been implemented in a large number of computer codes, most of them treating a general three-dimensional geometry and using buildup factor data in some form. The buildup factor data can be stored in a table. Interpolated values for use in a numerical integration or coefficients for a fitting function can be stored. The coefficients apply to the various shielding materials and source energies. The argument of the buildup factor is the number of mean free paths, Σr, between the source point and the "detector."

The number of mean free paths can be evaluated even though many materials may be traversed between the source and detector. If that is the case, the computed dose can be in great error because the available buildup factor data are for particular homogeneous materials. Several formulas for combining two layers of material are available but, to our knowledge, none is employed in the commonly used computer codes. A rule of thumb is to use the buildup factor for the material of the final layer if that layer is several mean-free-paths thick. The composite buildup factor is known to asymptotically approach that of the final layer. Otherwise, several trials may be made to estimate the uncertainty based on the various materials present. The most conservative value may be chosen for safety.

Two of the more popular forms for buildup factors are the Taylor representation:

$$B(r) = A_1 \exp(a_1 r) + A_2 \exp(-a_2 r), \tag{16}$$

where A_1, A_2, a_1, and a_2 are empirical constants and $A_2 = 1 - A_1$, and the Berger form:

$$B(r) = 1 + Cr[\exp(Dr)], \tag{17}$$

where C and D are empirical constants. A relatively new form, with remarkable ability to accurately reproduce transport theory results even for low energy and low atomic number (where other functions fail to fit accurately), is the geometric progression (G-P) form:

$$\begin{aligned} B(r) &= 1 + (b-1)(K^r - 1)/(K-1) \quad (K \neq 1) \\ B(r) &= 1 + (b-1)r \qquad\qquad\qquad\quad (K = 1), \end{aligned} \tag{18}$$

where $K = cr^a + d[\tanh(r/R_k - 2) - \tanh(-2)]/[1 - \tanh(-2)]$ and a, b, c, d, and R_k are parameters.

C. Removal–Diffusion Methods for Neutrons

In the early 1950s, shielding designs for nuclear-powered naval vessels and aircraft were based on attenuation measurements and "removal" cross-section theory. In a manner similar to the buildup factor formulation, the neutron dose attenuation kernel was taken to be

$$D(r) = QG(r)/(4\pi r^2). \tag{19}$$

In addition to the results from measurements, solutions for $G(r)$ in an infinite homogeneous medium for some materials also became available from calculations, although uncertainty in the cross sections used in the calculations made the results at deep penetration rather questionable. The removal cross section theory allowed the designer to estimate the effect of adding other materials into hydrogenous materials. It can be shown that a high energy interaction in a material such as iron is tantamount to removal from the penetrating component if sufficient hydrogen is present between the material and the detector. The value of the removal cross section, averaged over the source spectrum, is determined by experiment.

A significant extension of removal theory was effected by Spinney and others when the energy-dependent removal cross-section concept was combined with diffusion theory. This technique is far more powerful than the previous one, since absolute values of the dose, and even the energy spectra, can be computed. Nevertheless, the method is still empirical since the value of the removal cross section can only be justified on the basis of successful predictions compared to experiment. The best present review of this method is the article by Butler and Avery in the IAEA Engineering Compendium on Radiation Shielding, Vol. 1.

Spinney in the UK defined the "removal flux" as in Eq. (12) except that the removal, not the total, cross section is used. There are several ways to estimate the removal cross section theoretically, but usually the value is determined empirically. Interactions of the removal flux are then used as a source for each energy group of a diffusion theory calculation. Computer codes employing this method have been quite successful, especially in Europe, but most laboratories have changed in recent years to using discrete ordinates and Monte Carlo methods that are based on rigorous transport theory.

D. Other Approximate Methods

There have been a number of other approximate methods that have appeared in the literature. Any list of them would be incomplete. However, we list a few of them.

1. Single scatter: The approximation is made that only a single scattering is sufficient. This is nearly adequate if the scatterer is thin. It also accounts for much of the reflection from surfaces. One application is the calculation of air scattering for close distances. A refinement is to add buildup after the scatter.
2. Albedo methods: In this model, discussed briefly above, the reflection is treated at a point and use is made of albedo data, varying in detail. Such methods are frequently used to treat streaming in ducts and other voids.
3. Straight ahead: The assumption is made that the radiation proceeds straight ahead with a loss of intensity and possibly energy.
4. Two component: A narrow beam component is integrated over a source region and a diffusion component is integrated over a leakage surface.

VI. DETERMINISTIC METHODS FOR ANALYZING RADIATION TRANSPORT

Deterministic methods for analyzing radiation transport are, in the context of this article, those which provide solutions by using numerical techniques to obtain satisfactory results. In general this involves devising some scheme to represent the spatial, angular, and energy variables of concern for a given problem and developing a numerical algorithm to converge to an acceptably accurate result (the moments method, to be described later, is somewhat of an exception to this general approach). The invariant imbedding approach does not begin with the Boltzmann or integral transport equation but is a different formulation developed to calculate reflection and transmission functions.

For the spatial variable, a coordinate system most appropriate to the physical system is chosen and the operator $\mathbf{\Omega} \cdot \nabla$ is expressed in terms of the appropriate spatial and angular partial derivatives. The physical system is then divided into an appropriate number of spatial cells or intervals and quantities of interest are evaluated at boundaries and (usually) midpoints of those intervals. For systems that can be represented in one spatial dimension, there are models for slab, spherical, and cylindrical geometries. For two-dimensional systems there are X–Y, R–Z, R–θ, and hexagonal geometries. Both one- and two-dimensional geometry applications are routinely handled in today's computing environment. In recent years three-dimensional models have also been developed and applied. While not yet in routine use within the shielding community, increased access to larger, more powerful computers will in a few years allow many shielding analysts to perform three-dimensional deterministic calculations.

The angular variable is often represented in terms of a finite series of Legendre polynomials. Another approach, which is used in the discrete ordinates method, specifies the angular domain in terms of a finite number of discrete directions and corresponding weights (solid angles) to replace integration over angular variables by a summation (quadrature) over the discrete directions.

The energy domain is often divided into a finite number of ranges called groups. This "multigroup" approach is used for many deterministic methods.

The above discussion addresses some of the various ways that the spatial, angular, and energy variables are treated in computing the fundamental quantity of interest, namely $\phi(\mathbf{r}, E, \mathbf{\Omega})$. Implied in the various approaches are corresponding treatments of the energy and angular dependence of cross sections, scattering kernels, and source distributions. Consider a multigroup form of the transport equation

$$\begin{aligned}\mathbf{\Omega} \cdot \nabla \phi_g(\mathbf{r}, \mathbf{\Omega}) + \Sigma_g \phi_g(\mathbf{r}, \mathbf{\Omega}) \\ = \sum_{g'-1}^{G} \int_{\Omega'} d\mathbf{\Omega}' K_{g-g'}(\mathbf{r}, \mathbf{\Omega}'; \mathbf{\Omega}) \phi_{g'}(\mathbf{r}, \mathbf{\Omega}') \\ + Q_g(\mathbf{r}, \mathbf{\Omega}),\end{aligned} \tag{20}$$

where ϕ_g and Q_g represent the total flux density and external source, respectively, in group g, that is, the integrals of those quantities over the energy group interval. This implies a definition for the multigroup cross sections and scattering kernels that requires a prior knowledge of ϕ. For example, the above equation implies, a definition of a group cross section $\Sigma_g(r)$, obtained by integrating over all energies E in group g ($E \in g$), as follows:

$$\Sigma_g(\mathbf{r}) = \frac{\int_{E \in g} dE \int_{\Omega} d\mathbf{\Omega}\, \Sigma(\mathbf{r}, E) \phi(\mathbf{r}, E, \mathbf{\Omega})}{\int_{E \in g} dE \int_{\Omega} d\mathbf{\Omega}\, \phi(\mathbf{r}, E, \mathbf{\Omega})} \tag{21}$$

Of course ϕ is the quantity that is to be calculated. In practice, multigroup cross sections are computed prior to their application as

$$\Sigma_g(\mathbf{r}) = \frac{\int_{E \in g} dE\, \Sigma(\mathbf{r}, E) W(E)}{\int_{E \in g} dE\, W(E)}, \tag{22}$$

where $W(E)$ is a weighting function chosen in such a way to closely represent the energy dependence of the flux for the problem at hand. Obviously, the use of the multigroup approach should be handled with considerable care because of the above assumptions. Nevertheless, it is the method most often used, and with considerable success, for shielding applications.

A. Polynomial Expansion

Consider the one-dimensional, slab geometry form of the Boltzmann equation:

$$\mu\frac{d\phi(x,E,\mu)}{dx}+\Sigma(x,E)\,\phi(x,E,\mu)=\int_{E'}dE'\int_{\mu'}d\mu'[K(x,E';E,\mu';\mu)\phi(x,E',\mu')]+Q(x,E,\mu), \tag{23}$$

where x is the spatial variable, μ the direction cosine with respect to the x axis, $\Sigma(x,E)$ the total cross section, $[K(x,E';E,\mu';\mu)\,\phi(x,E',\mu')]\,dE\,d\mu$ the number of particles produced per unit volume and time in $d\mu$ and dE due to interaction of particles traveling in direction μ' with energy E', and $Q(x,E,\mu)$ the external source per unit volume, energy, and time. The angulardependent terms are represented as expansions in terms of Legendre polynomials as follows:

$$\phi(x,E,\mu)=\sum_{l=0}^{\infty}\frac{(2l+1)}{2}\phi_l(x,E)P_l(\mu) \tag{24}$$

$$Q(x,E,\mu)=\sum_{l=0}^{\infty}\frac{(2l+1)}{2}Q_l(x,E)P_l(\mu) \tag{25}$$

and

$$K(x,E';E,\mu';\mu)=\sum_{l=0}^{\infty}\frac{(2l+1)}{2}k_l(x,E';E)P_l(\mu_0), \tag{26}$$

where μ_0 is the change in direction cosine between μ' and μ. The Legendre coefficients are defined as

$$\phi_l(x,E)=\int_{-1}^{1}d\mu\,\phi(x,E,\mu)P_l(\mu)\,d\mu, \tag{27}$$

$$Q_l(x,E)=\int_{-1}^{1}d\mu\,Q(x,E,\mu)P_l(\mu)\,d\mu, \tag{28}$$

and

$$k_l(x,E';E)=\int_{-1}^{1}d\mu\,K(x,E';E,\mu';\mu)P_l(\mu_0)\,d\mu. \tag{29}$$

When the above expressions are introduced into the Boltzmann equation and each term is multiplied by the Legendre polynomial and integrated over μ, a set of coupled differential equations is defined for all groups as follows:

$$\frac{l+1}{2l+1}\frac{d}{dx}\phi_{l+1}(x,E)+\frac{l+1}{2l+1}\frac{d}{dx}\phi_{l-1}(x,E)=\int_{E'}dE'k_l(x,E';E)\,\phi_l(x,E')+Q_l(x,E'). \tag{30}$$

When limited to a finite number of terms, this "P_l" approximation can be solved with reasonable computation time. It has, in practice, been used only for one-dimensional applications.

B. Moments Method

In the moments method, which was developed and began to be used successfully in the 1950s for certain classes of problems, it is not necessary to use a multigroup approximation to represent the energy domain nor is it necessary to divide the region into spatial intervals. However, the approach is limited to an infinite homogeneous medium. The angular flux density and external source in one-dimensional slab geometry are represented by an infinite series as

$$\phi(z,E,\mu)=\frac{1}{4\pi}\sum_{l=0}^{\infty}(2l+1)\,\phi_l(z,E)P_l(\mu) \tag{31}$$

and

$$Q(z,E,\mu)=\frac{1}{4\pi}\sum_{l=0}^{\infty}(2l+1)Q_l(z,E)P_l(\mu). \tag{32}$$

The corresponding Legendre coefficients are determined using the orthogonal properties as

$$\phi_l(z,E)=2\pi\int_{-1}^{1}d\mu P_l(\mu)\phi(z,E,\mu) \tag{33}$$

and

$$Q_l(z,E)=2\pi\int_{-1}^{1}d\mu P_l(\mu)Q(z,E,\mu). \tag{34}$$

The Boltzmann equation in slab geometry with a plane source at $z=0$ is defined by multiplying $P_l(\mu)$ and integrating over angular space, resulting in

$$\frac{l+1}{2l+1}\frac{d}{dz}[\phi_{l+1}(z,E)]\frac{l}{2l+1}\frac{d}{dz}[\phi_{l-1}(z,E)]+\Sigma(z,E)\,\phi_l(z,E)=\int_{E'}dE'P_l(\mu_0)K(z,E';E)\,\phi_l(z,E')+Q_l(z,E)\,\delta(z), \tag{35}$$

where K relates the exit energy E to the entering energy E' in a collision, μ_0 is the cosine of the scattering angle (which is, in general, a unique value for a given E and E'), and $\delta(z)$ the Dirac delta function.

Next, spatial moments are defined as follows

$$M_{nl}(E)=\frac{1}{n!}\int_{-\infty}^{\infty}\phi_l(z,E)z''\,dz \tag{36}$$

such that multiplication of the equation by z'' and integrating over all space results in an equation in terms of moments of the form

$$\Sigma(E)M_{nl}(E) = \int_{E'} dE' P_l(\mu_0)K(E';E)M_{nl}(E') + Q_l(E)\,\delta_{n0} + \frac{l}{2l+1} \times [(l+1)\,M_{n-1,l+1}(E) + lM_{n-1,l-1}(E)], \quad (37)$$

where δ_{n0} is the Kronecker delta function. Note that in order to derive the moment equations, the spatial integration was performed by parts and imposed the condition that the $[\phi(z, E)Z^n]$ approach 0 at the limits of integration. In addition, the spatial dependence of Σ and K was dropped. These two conditions limit the moments method to infinite homogeneous medium applications.

The above set of integral equations in M_{nl} is normally solved numerically for a finite number of l and n. Then $\phi_l(z, E)$ is reconstructed from these M_{nl} using a variety of approaches.

The moments method has been used to obtain the energy spectrum of particles in infinite media and has also been the method most often used to calculate buildup factors for photon transport.

C. Discrete Ordinates

The discrete ordinates, or S_n method, as it is normally used for shielding problems, divides the spatial variable into a finite number of intervals, treats the energy variable in the multigroup fashion, and represents the angular variable in a finite number of discrete directions.

The Boltzmann equation is integrated over a spatial interval and the integration of the scattering source is represented as a summation over the discrete directions chosen for the problem. For one-dimensional, slab geometry with interval i bounded by (z_i, z_{i+1}), with n discrete directions, the relevant set of equations becomes

$$\mu_j \frac{[\phi_{gj}(z_{i+1}) - \phi_{gj}(z_i)]}{(z_{i+1} - z_i)} + \Sigma_g(\hat{z}_i)\,\phi_{gj}(\hat{z}_i) = \sum_{g'=1}^{g} 2\pi \sum_{j'=1}^{n} w_{j'} K_{g'g}^{j'j}(\hat{z}_i)\,\phi_{g'j'}(\hat{z}_i) + Q_g(\hat{z}_i) \quad (38)$$
$$(j = 1, \ldots, n;\ i = 1, \ldots, I),$$

where subscript g refers to energy group and j refers to direction. For spatially dependent quantities, the general notation $f(z_i)$ refers to a function f evaluated at point z_i whereas the notation $f(\hat{z}_i)$ refers to the function f evaluated at some point internal to the interval. The latter quantities arise because the mean value theorem is invoked in evaluating the integrals over spatial interval. The term $K_{g'g}^{j'j}$ represents the probability of scattering from group g' and direction j' into group g and direction j. Additional equations need to be introduced in order to obtain solutions to the above set of equations. This is commonly done by relating the internal fluxes for a spatial interval with its boundary values as follows

$$\phi_{gj}(\hat{z}_i) = A\phi_{gj}(z_{i+1}) + (1 - A)\phi_{gj}(z_i) \quad (\mu > 0) \quad (39)$$

and

$$\phi_{gj}(\hat{z}_i) = (1 - A)\phi_{gj}(z_{i+1}) + A\phi_{gj}(z_i) \quad (\mu < 0), \quad (40)$$

where A is a constant between $1/2$ and 1. These additional equations allow the solution of the boundary and internal flux density values. One of the most common choices for A is $1/2$, which results in the so called ordinary diamond difference equations.

The combination of equations is normally solved by an iterative technique. If the right-hand side of the first equation is denoted as $S(\hat{z}_i)$, therefore representing both scattering and external sources, then the combination of equations can be expressed as (assuming $A = 1/2$)

$$\phi_{gj}(z_{i+1}) = \frac{[2\mu_j - \delta z_i \Sigma_g]}{[2\mu_j + \delta z_i \Sigma_g]}\phi_{gj}(z_i) + \frac{2\delta z_i}{[2\mu_j + \delta z_i \Sigma_g]} S_{gj}(\hat{z}_i) \quad (\mu_j > 0) \quad (41)$$

or

$$\phi_{gj}(z_i) = \frac{[2\mu_j + \delta z_i \Sigma_g]}{[2\mu_j - \delta z_i \Sigma_g]}\phi_{gj}(z_{i+1}) - \frac{2\delta z_i}{[2\mu_j - \delta z_i \Sigma_g]} S_{gj}(\hat{z}_i) \quad (\mu_j < 0). \quad (42)$$

The above equation can be used to solve for tentative values for all boundary $\phi_{gj}(z_i)$ by assuming an initial guess for $S_{gj}(\hat{z}_i)$, since it depends on the internal flux density values $\phi_{gj}(\hat{z}_i)$. These tentative boundary $\phi_{gj}(z_i)$ values are used to compute tentative internal $\phi_{gj}(\hat{z}_i)$ which are then used to determine a new guess for $S_{gj}(\hat{z}_i)$. This iterative procedure is repeated until the $\phi_{gj}(z_i)$ values converge to an acceptable accuracy.

An alternate approach to solving the Boltzmann integrodifferential equation is by performing a direct integration along the path of particle flow along a given discrete direction. In this approach it is not necessary to represent the angular variable of the flux or scattering distribution in a Legendre expansion. The direct numerical integration is performed using a quadrature scheme. It is necessary to approximate the spatial distribution assuming linear or exponential variation.

D. Invariant Imbedding

The invariant imbedding approach does not start form the Boltzmann equation. First applied in astrophysics, it has

more recently been used for reflection and transmission radiation transport problems. The method provides detailed information about reflected and transmitted radiation for a medium but not its behavior internal to the medium.

For a one-dimensional slab of thickness Z, the reflection function $R(Z; E_0, \mu_0; E, \mu)\, dE\, d\mu$ is the number of particles reflected from a slab of thickness Z in direction $d\mu$ about μ with energies in dE about E due to incident particles with energy E_0 in direction μ_0. An equation relating the change in R due to changes in slab thickness with the net change in R due to collisions in the differential slab thickness is used as the basis of the approach.

$$\left|\begin{array}{l}\text{Net change in } R \text{ due to change}\\ \text{in thickness from Z to } Z+\delta Z\end{array}\right| = -(1) - (2) + (3) + (4) + (5) + (6),$$

where (1) is particles that do not enter slab Z because of collision in δZ, (2) particles that emerge from slab Z, collide in δZ, and do not emerge from slab $Z + \delta Z$, (3) source particles that scatter in δZ and emerge with (E, μ), (4) source particles that scatter in δZ, enter slab Z with (E', μ'), and emerge with (E, μ), (5) source particles that enter slab Z, emerge with (E', μ'), and scatter in δZ to E and μ, and (6) source particles that enter slab Z, emerge with (E', μ'), scatter in δZ, reenter slab Z with (E'', μ''), and reemerge with (E, μ).

In the limit as δZ approaches 0, the following relationship emerges:

$$\begin{aligned}\frac{d}{dZ}R(Z; E_0, \mu_0; E, \mu) &= \frac{1}{\mu_0}K(Z; E_0, \mu_0; E, \mu)\\ &- \left|\frac{\Sigma(Z, E_0)}{\mu_0} + \frac{\Sigma(Z, E)}{\mu}\right| R(Z; E_0, \mu_0; E, \mu)\\ &+ \int_0^\infty dE' \int_{-1}^0 d\mu' \frac{1}{\mu_0} K(Z; E_0, \mu_0; E', \mu')\\ &\times R(Z; E', \mu'; E, \mu) + \int_0^\infty dE'\\ &\times \int_0^1 d\mu' R(Z; E, \mu; E', \mu') \frac{1}{\mu'} K(Z; E', \mu'; E, \mu)\\ &+ \int_0^\infty dE' \int_0^\infty dE'' \int_0^1 d\mu' \int_{-1}^0 d\mu''\\ &\times \left[R(Z; E_0, \mu_0; E', \mu') \frac{1}{\mu'} K(Z; E', \mu'; E'', \mu'')\right.\\ &\left. + R(Z; E'', \mu''; E, \mu)\right], \end{aligned} \tag{43}$$

where Σ and K have essentially the same meaning used earlier in the derivation of the Boltzmann equation.

The transmission function $T(Z; E_0, \mu_0; E, \mu)\, dE\, d\mu$ is the number of particles transmitted through a slab of thickness Z with energies in dE at E and directions in $d\mu$ at μ per incident source particle at the opposite side with energy E_0 and direction μ_0. Using reasoning similar to that used for the reflection function we can derive

$$\begin{aligned}\frac{d}{dZ}T(Z; E_0, \mu_0; E, \mu) &= -\frac{\Sigma(Z, E_0)}{\mu_0} T(Z; E_0, \mu_0; E, \mu)\\ &+ \int_0^\infty dE' \int_{-1}^0 d\mu' \frac{1}{\mu_0} K(Z; E_0, \mu_0; E, \mu)\\ &\times T(Z; E', \mu'; E, \mu) + \int_0^\infty dE' \int_0^\infty dE''\\ &\times \int_0^1 d\mu' \int_{-1}^0 d\mu'' \left[R(Z; E_0, \mu_0; E', \mu') \frac{1}{\mu'}\right.\\ &\left. \times K(Z; E', \mu'; E'', \mu'') + T(Z; E'', \mu''; E, \mu)\right]. \end{aligned} \tag{44}$$

The equations must be solved using numerical methods. Techniques similar to those used in the discrete ordinate method are usually applied. Invariant imbedding has most often been utilized as a means of providing a description of the reflection, or albedo, properties of materials. Such albedo information can be extremely valuable in reducing the running time of complex Monte Carlo problems where reflection from surfaces is an important component of the desired answer.

E. Boltzmann Integral Transport

Solutions of the Boltzmann integral equation have been developed for applications to shielding problems. For one-dimensional slab geometry, the integral equation can be expressed as

$$\phi(z, E, \mu) = \int_{z'} dz' S(z', E, \mu) T(E, z'; z) \tag{45}$$

with

$$\begin{aligned}S(z', E, \mu) = &\int_{E'} dE' \int_{\mu'} d\mu' \phi(z', E', \mu')\\ &\times K(z', E'; E, \mu'; \mu) + Q(z', E, \mu). \end{aligned} \tag{46}$$

One approach to the solution of the integral equation is the Anisotropic Source Flux Iteration Technique (ASFIT) which is a semianalytic technique. The method uses Legendre polynomial expansion in μ for the flux and external source densities, ϕ and Q. A "discrete ordinate" representation for the spatial and energy variables is used, and it is assumed that the emission source S is linear or quadratic in z between space points and that ϕ is linear in E between energy points. The space transmission matrix

T and the energy-angle transfer matrix K can be computed from material cross-section and geometry input data.

One of the more powerful aspects of this approach is the ability to remove troublesome singularity conditions that sometimes cause problems with other deterministic approaches. For example, polynomial expansion of angular distributions of monodirectional, monoenergetic photon source can cause problems. In such cases the source has a singularity that persists even after the first collision. These types of problems are typically resolved by analytically evaluating the first-collision flux and the second-collision emission source. Polynomial expansion of the remaining components of ϕ and S are very satisfactory.

After the analytic evaluations, an iterative scheme is started, first calculating ϕ using the available information for S, then computing S using ϕ, and so forth. When the S for successive iterations is within a prescribed tolerance, the process is stopped.

The procedure has been applied with success to photon transport problems (primarily) and has been developed to handle three-dimensional geometry and multigroup neutron transport.

VII. MONTE CARLO METHODS FOR ANALYZING RADIATION TRANSPORT

In Section III.E the transport of radiation was described as a stochastic process, and it was suggested that the integral equation provides a logical basis for applying Monte Carlo techniques to radiation transport analysis. This is more apparent when the integral form is represented in terms of a collision density Φ as

$$\Phi(\mathbf{r}, E, \mathbf{\Omega}) = \Sigma(\mathbf{r}, E)\phi(\mathbf{r}, E, \mathbf{\Omega}) = \int_{\mathbf{r}'} d\mathbf{r}' S(\mathbf{r}', E, \mathbf{\Omega})\theta(E, \mathbf{r}'; \mathbf{r}), \quad (47)$$

where

$$S(\mathbf{r}', E, \mathbf{\Omega}) = \int_{E'} dE' \int_{\Omega'} d\mathbf{\Omega}' \Phi(\mathbf{r}', E', \mathbf{\Omega}') \times C(\mathbf{r}', E'; E, \mathbf{\Omega}'; \mathbf{\Omega}) + Q(\mathbf{r}', E, \mathbf{\Omega}). \quad (48)$$

The above equations are related to the forms presented in Section III.E via the definitions $\Phi = \Sigma\phi$, $K = \Sigma C$, and $\theta = \Sigma T$ in terms of quantities defined earlier.

These can also be represented as a sum over collision number as

$$\Phi(\mathbf{r}, E, \mathbf{\Omega}) = \sum_{n=1}^{\infty} \Phi_n(\mathbf{r}, E, \mathbf{\Omega}) \quad (49)$$

and

$$S(\mathbf{r}, E, \mathbf{\Omega}) = \sum_{n=0}^{\infty} S_n(\mathbf{r}, E, \mathbf{\Omega}), \quad (50)$$

Where Φ_n is the density of particles at $\mathbf{r}$ with energy in dE at E and direction $d\mathbf{\Omega}$ at $\mathbf{\Omega}$ that have undergone $(n-1)$ collisions, and S_n the density of particles emerging from collision n at $\mathbf{r}$ with E in dE and $\mathbf{\Omega}$ in $d\mathbf{\Omega}$, with $n = 0$ referring to the external sources. Then,

$$S_0(\mathbf{r}, E, \mathbf{\Omega}) = Q(\mathbf{r}, E, \mathbf{\Omega}) \quad (51)$$

$$S_n(\mathbf{r}, E, \mathbf{\Omega}) = \int_{E'} dE' \int_{\Omega'} d\mathbf{\Omega}' \Phi_n(\mathbf{r}, E', \mathbf{\Omega}') \times C(\mathbf{r}, E'; E, \mathbf{\Omega}'; \mathbf{\Omega}) \quad (n = 1, 2, \ldots) \quad (52)$$

and

$$\Phi_{n+1}(\mathbf{r}, E, \mathbf{\Omega}) = \int_{\mathbf{r}'} d\mathbf{r}' S_n(\mathbf{r}', E, \mathbf{\Omega})\theta(E, \mathbf{r}', \mathbf{r}) \quad (n = 0, 1, 2, \ldots). \quad (53)$$

The Monte Carlo method simulates an "analog" random walk process governed by the above equations. To begin, the external source density Q is sampled to select a spatial position, direction, and energy of an initial particle which is then transported to its first collision site by sampling from the transport kernal θ. At the collision site the kernel C is sampled to identify the interaction type and, if a scattering event occurs, a selection is made of a new direction and energy. Then the distance to the next collision is determined using θ. The "analog" process is repeated until the particle is absorbed or leaves the system. Quantities such as the number of collisions occurring in particular regions of interest are tabuated during the process, and estimates of responses of interest are computed. The sequence is continued until enough particles have been sampled to reduce the statistical uncertainty in the results to an acceptable level.

For shielding problems, it is usually the case that analog Monte Carlo approaches are inadequate to yield good "statistics" because the events of interest are rare. For example, a typical shield will attenuate radiation by several orders of magnitude. From the shielding point of view, the particles that escape are of primary interest. However, the probability of recording such events is low and an unacceptably large number of case histories is required to get good results. For that reason, other estimation techniques are employed to improve the efficiency of the calculation. These include calculating estimates to a response of interest from every collision point and using special sampling techniques that emphasize important parts of the external source distribution Q as well as preferred energies, directions, and spatial regions when sampling from the transport kernel θ and the collision kernel C.

Many problems can be expressed in the form

$$\langle g \rangle = \int_{\mathbf{P}} d\mathbf{P} g(\mathbf{P}) S(\mathbf{P}), \tag{54}$$

where $g(\mathbf{P})$ is the "score" for a particle at $\mathbf{P}$ in phase space and $S(\mathbf{P})$ is the density of particles emerging from collision at $\mathbf{P}$. The Monte Carlo game involves scoring $g(\mathbf{P})$ for each particle emerging from a collision at $\mathbf{P}$. If enough samples are taken, the central limit theorem of statistics predicts that the average score will approach the desired quantity $\langle g \rangle$. A major task in the Monte Carlo approach is to find ways to reduce the variance of the estimate of $\langle g \rangle$ to an acceptable level.

The primary advantage of Monte Carlo over deterministic methods, particularly for neutron transport problems, has been its ability to accurately model complex, three-dimensional geometry without having to employ approximate techniques. There are two basic approaches for representing the energy dependence of data in the solution of radiation transport via the Monte Carlo method: "point" and "multigroup."

A. Point Monte Carlo

The "point" approach generally refers to the manner in which the cross section data are represented. Typically the data are represented by values tabulated at energy points selected such that interpolation between points yields values acceptably close to the original evaluated data. Since an evaluated data file for an isotope such as iron may require up to 5000 energy points to represent the total cross section over the energy range from 1.0^{-5} eV to 20.0 MeV, the point approach involves extensive cross section data files. The advantage is the likely avoidance of problems associated with the multigroup approximation.

The scattering angular distributions are typically represented in a point fashion such that for a given incident particle energy, the scattering kernel is restructured so that values are tabulated at a fixed number (e.g., 30) of equally probable cosine values, making the selection of scattering directions very fast.

Despite the apparent advantages that point Monte Carlo has over multigroup, the latter is used quite extensively for solving radiation transport problems.

B. Multigroup Monte Carlo

This approach typically uses multigroup cross-sections of the type described in Section VI.C, which are multigroup averages of reaction cross sections and Legendre expansions of group-to-group transfers. In one popular method, the multigroup transfer is represented by a discretization of the Legendre polynomial (P_n) expansion into $n+1$ moments that provide an equivalent distribution with $(n+1)/2$ discrete scattering directions. Unlike the set of discrete directions fixed in space in the discrete ordinates method, only the scattering angle representation is discrete, and it is different for each group-to-group transfer. Thuse, after seveal collisions the angular distribution of particle directions is continuous. Some problems may not be treated well by this approach, including situations with little multiple scattering or highly directionally dependent external sources.

One advantage of the approach is the ability to use the same cross sections as for one- and two-dimensional analyses using discrete ordinates. Methods exist to couple the two-dimensional and multigroup Monte Carlo results, allowing the analyst to apply three-dimensional geometry of a large problem only when necessary. Another advantage is the ability to easily perform adjont calculations (see Section VIII). Many problems, such as those with a large external source region or a small concentrated detector region, are more amenable to solution in the adjoint mode.

VIII. ADJOINT METHODS

A. The Adjoint Equation

The equation adjoint to the integrodifferential form of the Boltzmann equation can be expressed as

$$\begin{aligned} -\boldsymbol{\Omega} \cdot \nabla \phi^*(\mathbf{r}, E, \boldsymbol{\Omega}) + \Sigma(\mathbf{r}, E, \boldsymbol{\Omega}) \phi^*(\mathbf{r}, E, \boldsymbol{\Omega}) \\ = \int_{E'} dE' \int_{\Omega'} d\boldsymbol{\Omega}' K(\mathbf{r}, E; E', \boldsymbol{\Omega}; \boldsymbol{\Omega}') \phi^*(\mathbf{r}, E', \boldsymbol{\Omega}') \\ + \Sigma_{\mathrm{R}}(\mathbf{r}, E), \end{aligned} \tag{55}$$

where ϕ^* is the adjoint function and Σ_{R} is the response function which serves as the source for the adjoint problem. The Boltzmann equation is often referred to as the "forward" equation and the adjoint as the "backward" equation. It can be shown that by combining the two equations (forward and adjoint) and integrating over all space. a response of interest, R, can be calculated using either

$$R = \int_{\mathbf{r}} d\mathbf{r} \int_E dE \int_{\Omega} d\boldsymbol{\Omega}\, \Sigma_{\mathrm{R}}(\mathbf{r}, E) \phi(\mathbf{r}, E, \boldsymbol{\Omega}) \tag{56}$$

or

$$R = \int_{\mathbf{r}} d\mathbf{r} \int_E dE \int_{\Omega} d\boldsymbol{\Omega}\, \phi^*(\mathbf{r}, E, \boldsymbol{\Omega}) Q(\mathbf{r}, E, \boldsymbol{\Omega}). \tag{57}$$

Thus a given problem can be formulated in either the "forward" or adjoint mode, the choice depending on the nature of the results desired. If a variety of responses are of interest, it is better to do the forward calculation for $\phi(\mathbf{r}, E, \boldsymbol{\Omega})$ and use it Eq. (8.2) with different Σ_{R}. If the same response type is desired for a variety of different

sources $Q(\mathbf{r}, E, \mathbf{\Omega})$, then an adjoint calculation is indicated. The resulting $\phi^*(\mathbf{r}, E, \mathbf{\Omega})$ is then used with the different sources of interest in Eq. (57).

Adjoint calculations are done rather routinely with discrete ordinates codes. As was mentioned earlier, the multigroup Monte Carlo method is particularly suited for adjoint calculations. This is, perhaps, one reason that multigroup Monte Carlo has many users.

B. Importance Function in Monte Carlo Applications

The integral form of the Boltzmann equation may be expressed as

$$S(\mathbf{P}) = \int_{\mathbf{P}'} d\mathbf{P}' K(\mathbf{P}'; \mathbf{P}) S(\mathbf{P}') + Q(\mathbf{P}), \tag{58}$$

where $\mathbf{P}$ represents all phase space variables and S, K, and Q have the same meaning defined in Section VII. The equation can be transformed using an arbitrary function I, which represents the importance of a particle at $\mathbf{P}$ to the result of interest $\langle g \rangle$, by multiplying by a factor

$$\frac{I(\mathbf{P})}{\int_{\mathbf{P}'} d\mathbf{P} I(\mathbf{P}') Q(\mathbf{P}')}$$

and defining

$$S'(\mathbf{P}) = \frac{S(\mathbf{P}) I(\mathbf{P})}{\int_{\mathbf{P}'} d\mathbf{P} I(\mathbf{P}') Q(\mathbf{P}')} \tag{59}$$

the equation becomes

$$S'(\mathbf{P}) = \int_{\mathbf{P}'} d\mathbf{P}' K'(\mathbf{P}'; \mathbf{P}) S'(\mathbf{P}') + Q'(\mathbf{P}), \tag{60}$$

where

$$K'(\mathbf{P}'; \mathbf{P}) = \frac{I(\mathbf{P})}{I(\mathbf{P}')} K(\mathbf{P}'; \mathbf{P}) \tag{61}$$

and

$$Q'(\mathbf{P}) = \frac{Q(\mathbf{P}) I(\mathbf{P})}{\int_{\mathbf{P}'} d\mathbf{P} I(\mathbf{P}') Q(\mathbf{P}')} = \frac{Q(\mathbf{P}) I(\mathbf{P})}{Q_0}. \tag{62}$$

The quantity of interest $\langle g \rangle$ is then given by

$$\langle g \rangle = Q_0 \int_{\mathbf{P}} d\mathbf{P} \frac{g(\mathbf{P})}{I(\mathbf{P})} S'(\mathbf{P}), \tag{63}$$

which involves a Monte Carlo game that generates a collision density from $S'(\mathbf{P})$ and scoring $g(\mathbf{P})/I(\mathbf{P})$ at every collision. The final result must be multiplied by the normalization factor Q_0.

It can be shown that if $J(\mathbf{P})$ is the expected answer that a particle will yield from a collision at $\mathbf{P}$ and all subsequent collisions [that is, $J(\mathbf{P}) = I(\mathbf{P})$], then the integral equation for J is given by

$$J(\mathbf{P}) = \int_{\mathbf{P}'} d\mathbf{P}' K(\mathbf{P}; \mathbf{P}') J(\mathbf{P}') + g(\mathbf{P}) \tag{64}$$

and is the adjoint to the equation for S. It can further be demonstrated that if J were known, it could be used to play a Monte Carlo game with zero variance.

In practice this is not possible, but estimates of J can be made by performing adjoint discrete ordinates one- or two-dimensional calculations for similar configurations and using the results for an efficient Monte Carlo game. However, this must be done carefully. Slight departures from optimum can lead to large weight fluctuations and not improve efficiency.

C. Sensitivity Analysis

Solutions to the adjoint equation can be used to calculate a relative sensitivity coefficient

$$\mathbf{P}_\Sigma = \frac{[\delta R/R]}{[\delta \Sigma/\Sigma]}. \tag{65}$$

These are potentially very useful quantities that provide a great deal of information about how a quantity of interest. R, will change if the cross-section Σ is changed. There are computational systems that automate the procedure by performing one-dimensional discrete ordinates calculations for ϕ and ϕ^*, calculating $\mathbf{P}_\Sigma$ for all the cross sections that might be of interest for a given problem, and computing $\delta R/R$ for any combination of cross section changes of interest. This procedure is used to assess the impact of proposed cross section changes on key experimental benchmark results as a new version of the ENDF/B evaluated cross section library is prepared.

IX. VERIFICATION OF CALCULATIONS

There is a continuing search for means to test the various calculational methods used for radiation transport analyses. Uncertainties in calculated results arise from several areas including the properties of the source, the cross section of materials involved in the calculation, modeling limitations, calculational method approximations, and statistical uncertainty of Monte Carlo results. At least three methods have been employed in the search to verify calculations: calculational benchmarks, experimental benchmarks, and measurements at operating facilities.

A. Calculational Benchmarks

An ideal calculational benchmark is one that specifies a particular radiation transport problem for which an analytical answer is known. It allows a developer to test a new method to judge how well it does against known solutions.

The American Nuclear Society Shielding Standards Committee (ANS-6) and the RSIC published a compilation of several such benchmarks (ORNL-RSIC-25).

Recent activities in this area include the specification of a particular reactor model and the collection of solution results from participants. Though the solution for such "paper" benchmarks is not known, the comparative results are compiled and conclusions drawn about methods and data used in the study. Two groups are currently involved in this type of activity: the ANS-6 and the OECD Nuclear Energy Agency Committee on Reactor Physics (NEACRP) Shielding Benchmark Subcommittees.

B. Experimental Benchmark Facilities

Facilities have been built and operated to test all aspects of the radiation transport calculational process. Two types of experiments are typically attempted: single material and prototype mock-ups. The former are designed in simple geometry to specifically test the cross sections of the material in question. The latter are usually designed for geometric symmetry in two dimensions, and are often a test of both methods of analysis and the cross section data. It is not always easy to attribute discrepancies between calculations and experiments to data or methods alone.

Both types are called "integral" experiments because the measurement of interest is often an integral quantity such as dose or damage. Neither type is a direct measure of a fundamental quantity such as a cross section. Both serve to validate data and methods and can reveal where further fundamental measurements or developments are required. Many facilities throughout the world have been established with a variety of source types as described below. The following list is not exhaustive but includes most facilities from which results were presented at the Sixth International Conference on Reactor Shielding held in Tokyo, Japan in 1983.

1. Fission Reactors

The Oak Ridge National Laboratory has several fission reactors used to perform integral experiments. The most prominent is the Tower Shielding Facility (TSF) which has been used in recent years for breeder reactor and gas-cooled reactor material and mockup studies. The Oak Ridge Research Reactor (ORR) has recently been used for measurements related to pressure vessel damage studies in LWRs. At Los Alamos National Laboratory the SHEBA facility has been used for neutron skyshine measurements. The Army Pulse Reactor at Aberdeen Proving Ground is used for air transport studies.

The Atomic Energy Establishment at Winfrith, England has the APSIS facility on the Nestor reactor. It has been used for neutron transport studies in iron and neutron streaming problems. The University of London Reactor Center also has a benchmark facility.

France conducts a fast reactor benchmark program called JASON using the Harmonie reactor. Italy, which uses the Tapiro reactor at Cassacia, collaborates in the fast reactor benchmark area. The EEC Joint Reasearch Center at Ispra, Italy operates the EURACOS facility for benchmark measurements.

In the Russia at the Kurchatov Institute a water-moderated and cooled reactor is operated, and studies of LWR problems are undertaken. There are also B-2 and BR-10 facilities at the Moscow Engineering Physics Institute to include fast reactor studies.

The Japanese use the JRR-4 at the Japan Atomic Energy Research Institute (JAERI) for LWR streaming studies for neutrons and photons. Also at JAERI, the Tank Critical Assembly was the source to study exposure in adjacent rooms. The Japanese Power Demonstration Reactor (JPDR) at JAERI was used to study photon skyshine. The JOYO reactor of the Power Reactor and Nuclear Fuel Development Company (PNC) has been used for fast reactor benchmarks. At the University of Tokyo, the YAYOI reactor has been used for fast reactor streaming studies.

2. Californium-252

The isotope ^{252}Cf fissions spontaneously and is often used for studies to be applied to fission reactors. Such a source is used at the Central Research Institute of the Electric Power Industries in Japan for spent fuel shipping cask analyses. The Universities of Tokyo and Kyoto also have such facilities.

The Nuclear Research Center, Rez, in Prague, Czechoslovakia, also has done studies with ^{252}Cf in collaboration with the Research Center in Obninsk, Russia.

Benchmark measurements of iron transport have been made at the KFK in Karlsruhe, Federal Republic of Germany.

3. D-T Sources

The reaction of deuterium fusing with tritium produces neutrons with energies near 14 MeV. Accelerators of this type are fairly common and are used for studying materials of interest to fusion reactor design. There are several in Japan involved in studies to support fusion reactor development. Among them are the Fusion Neutron Source (FNS) facility at JAERI, the OKTAVIAN program at Osaka University, and an accelerator at Tokyo University. All are used for both types of benchmark experiments.

An extensive program has been operated at ORNL for fusion integral experiments that have covered penetration, streaming, and mock-up configurations.

At Lawrence Livermore National Laboratory a series of single material studies (called pulsed sphere tests) has been conducted.

4. Photon Sources

Radioactive sources of photons are fairly common. Recent experimental programs reported at the 6th ICRS include a PYLOS facility at the NESTOR reactor at the AEE Winfrith, England.

The University of Mysore in India reported on ^{137}Cs experiments.

A facility at Kansas State University and the JPDR at JAERI in Japan were both involved in separate studies of photon skyshine.

C. Operating Facilities

The true test of methods and data is actual performance of the shields designed for operating facilities. At the sixth ICRS, numerous examples of such measurements were provided.

1. Light Water Reactors

Measurements at boiling water reactors (BWR) in Italy, Japan, Taiwan, and the United States were successfully compared to calculations. Comparisons for pressurized water reactors (PWR) were also made in France, the Federal Republic of Germany, and the United States.

2. Advanced Reactors

Measurements in France's Phenix fast reactor confirmed calculations. The Experimental Breeder Reactor-II in Idaho and the Fast Flux Test Facility in Washington are experimental fast reactors in the United States that have provided operational data on both neutron and photon dose and damage measurements. Measurements at advanced gas-cooled reactors in England were also reported at the 6th ICRS.

3. Shipping Casks

Both France and Japan reported on successful measurements and analyses of spent fuel shipping casks.

X. RADIATION DETECTION METHODS

A. Photon Dose

There are several classes of instruments for the measurement of exposure, absorbed dose, or dose equivalent. The broadest classification would probably distinguish between gas-filled detectors, photographic emulsions, and thermoluminescent detectors.

The gas-filled detectors may be classified as ionization chambers, proportional counters, and Geiger–Mueller counters.

The net result of the radiation interaction in a wide category of detectors is the appearance of a given amount of electric charge within the detector active volume. This charge must be collected to form the basic electrical signal. Typically, collection of the charge is accomplished through the imposition of an electric field within the detector that causes the positive and negative charges created by the radiation to flow in opposite directions.

There are two general modes of operation of radiation detectors, The first is called current mode and represents the situation in which the average dc current produced by the detector is measured. If we were to connect a simple ammeter across the terminals of the detector, it would record the time average of each individual burst of current caused by separate radiation interactions. Detectors that are applied to radiation dosimetry are often used in current mode. Also, radiation detectors used for nuclear reactor power monitoring are most often operated in current mode. Generally, however, the detector is operated in a different way. Instead of looking at the average current over many interactions, the output is recorded for each individual quantum of radiation that happens to interact in the detector. The detector is then operated in pulse mode.

The majority of gas-filled detectors are based on sensing the direct ionization created by the passage of the radiation. The detectors discussed here (ion chambers, proportional counters, Geiger tubes) all derive, in somewhat different ways, an electronic output signal that originates with the ion pairs formed within the gas that fills the detector.

Ion chambers in principle are the simplest of all gas-filled detectors. Their normal operation is based on collection of all the charges created by direct ionization within the gas through the application of an electric field. As with other detectors, ion chambers can be operated in current or pulse mode. In most common applications, ion chambers are used in current mode as dc devices. In contrast, proportional counters or Geiger tubes are almost always used in pulse mode.

The term ionization chamber has conventionally come to be used exclusively for the type of detector in which ion pairs are collected from gases. One of the most important applications of ion chambers is in the measurement of γ-ray exposure. An air-filled ion chamber is particularly well suited for this application because exposure is defined in terms of the amount of ionization charge created in air.

Gas-filled ionization chambers can also be indirectly applied to the measurement of absorbed dose.

The proportional counter is a type of gas-filled detector which was introduced in the late 1940s. In common with the Geiger–Mueller tubes, proportional tubes are almost always operated in pulse mode and rely on the phenomenon of gas multiplication to amplify the charge represented by the original ion pairs created within the gas. Pulses are therefore considerably larger than those from ion chambers used under the same conditions, and proportional counters can be applied to situations in which the number of ion pairs generated by the radiation is too small to permit satisfactory operation in pulse-type ion chambers. One important application of proportional counters has therefore been in the detection and spectroscopy of low-energy X-radiation (where their principal competitor is the lithium-drifted silicon detector). Proportional counters are also widely applied in the detection of neutrons.

Gas multiplication is a consequence of increasing the electric field within the gas to a sufficiently high value. At low values of the field, the electrons and ions created by the incident radiation simply drift to their respective collecting electrodes. During the migration of these charges, many collisions normally occur with neutral gas molecules causing secondary ionization.

The electron liberated by this secondary ionization process will also be accelerated by the electric field. During its subsequent drift, it undergoes collisions with other neutral gas molecules and thus can create additional ionization. The gas multiplication process therefore takes the form of a cascade, known as a *Townsend avalanche*, in which each free electron created in such a collision can potentially create more free electrons by the same process. In the proportional counter, the avalanche terminates when all free electrons have been collected at the anode.

The Geiger–Mueller counter (commonly referred to as the G–M counter, or simply Geiger tube) is one of the oldest radiation detector types in existence, having been introduced by Geiger and Mueller in 1928. However, the simplicity, low cost, and ease of operation of these detectors have led to their continued use to the present time.

In the G–M tube, substantially higher electric fields are created which enhance the intensity of each avalanche. Under proper conditions, a situation is created in which one avalanche can itself trigger a second avalanche at a different position within the tube. At a critical value of the electric field, each avalanche can create, on the average, at least one more avalanche, and a self-propagating chain reaction will result. At still greater values of the electric field, the process becomes rapidly divergent and, in principle, an exponentially growing number of avalanches could be created within a very short time. Once this "Geiger discharge" reaches a certain size, however, collective effects of all the individual avalanches come into play and ultimately terminate the chain reaction. Because this limiting point is always reached after about the same number of avalanches have been created, all pulses from a Geiger tube are of the same amplitude regardless of the number of original ion pairs that initiated the process. A Geiger tube can therefore function only as a simple counter of radiation-induced events, and cannot be applied in direct radiation spectroscopy because all information on the amount of energy deposited by the incident radiation is lost.

Photographic emulsions are also widely applied in radiation dosimetry. In the most familiar form, a "film badge" consists of a small packet of film with a light-tight wrapping mounted within a film holder or "badge" which clips to the wearer's clothing. An evaluation of the dose accumulated over the course of exposure is carried out by comparing the density of the developed film with that of an identical film exposed to a calibrated dose. In this way, variations in emulsion sensitivity and developing procedures are canceled out.

The inorganic scintillation materials discussed in a later section, when exposed to ionizing radiation, emit light in the form of prompt fluorescence. The scintillation photons are given off when the electron–hole pairs that were formed by the incident radiation recombine at an activator site. These materials are purposely kept free of other impurities and defects in order to maximize the yield of prompt scintillation light.

A different class of inorganic crystals, known as thermoluminescent dosimeters (TLDs), is based on a somewhat opposite approach. Instead of promoting the quick recombination of electron-hole pairs, materials are used that exhibit high concentrations of trapping centers within the band gap. The desired process is now one in which electrons are elevated from the conduction to the valence band by the incident radiation, but are then captured at one of the trapping centers. If the distance of the trap energy level below the conduction band is sufficiently large, there is only a small probability per unit time at ordinary room temperatures that the electron will escape the trap by being thermally excited back to the conduction band. Therefore, exposure of the material to a continuous source of radiation, although not resulting in a significant yield of prompt scintillation light, leads to the progressive buildup of trapped electrons.

After the exposure period, the trapped carriers can be measured by placing the TLD sample on a heated support or otherwise warmed and its temperature progressively raised. At a temperature that is determined by the energy level of the trap, the trapped electrons can pick up enough thermal energy so that they are reexcited back to the conduction band.

Thus, TLD systems derive a signal by using a heater in which the sample can be viewed by a photomultiplier tube. The light yield is recorded as a function of sample

temperature in a "glow curve." The basic signal related to the radiation exposure is the total number of emitted photons, or the area under the glow curve. If the sample is raised to a relatively high temperature all the traps are depleted, and the exposure record of the sample is "erased." Therefore, TLD materials have the very practical advantage of recyclability, and a single sample may be reused many times.

The most popular TLD material is LiF. Crystals of $CaSO_4$ and CaF_2 with manganese added as an activator are also frequently used.

B. Photon Energy Spectrum

The exposure, absorbed dose, or dose equivalent is a measure of the total radiation field, or more precisely, its effect on some material. For a detailed understanding of the shield performance or to evaluate effects of various kinds, knowledge of the flux density as a function of energy, that is, the spectrum, is needed.

In many radiation detection applications, the use of a solid detection medium is of great advantage. Detector dimensions can be kept much smaller than the equivalent gas-filled detector because solid densities are some 1000 times greater than that for a gas. Scintillation detectors offer one possibility of providing a solid detection medium, and their application to the detection and measurement of various radiations is discussed below. Typical materials are large sodium iodide crystals or proprietary materials such as NE 213 from Nuclear Enterprises, Ltd. The pulse height distribution of the signals from the detector is a convolution of the response function and the energy distribution of the incident radiation. The mathematical procedure for deducing the radiation spectrum from the pulse height distribution is called unfolding. A number of computer codes are available for this purpose.

One of the major limitations of scintillation counters is their relatively poor energy resolution. The chain of events that must take place in converting the incident radiation energy or light and the subsequent generation of an electrical signal involves many inefficient steps. Therefore, the energy required to produce one information carrier (a photoelectron) is of the order of 1000 eV or more, and the number of carriers created in a typical radiation interaction is usually no more than a few thousand.

The only way to reduce the statistical limit on energy resolution is to increase the number of information carriers per pulse. The use of semiconductor materials as radiation detectors can result in a much larger number of carriers for a given incident radiation event than is possible with any other detector type. Consequently, the best energy resolution achievable today is realized through the use of such detectors. The basic information carriers are electron–hole pairs created along the path taken by the charged particle (primary radiation or secondary particle) through the detector. The electron–hole pair is somewhat analogous to the ion pair created in gas-filled detectors. Their motion in an applied electric field generates the basic electrical signal from the detector.

Devices employing semiconductors as the basic detection medium became available in the early 1960s. Modern detectors are referred to as semiconductor diode detectors or simply solid-state detectors. Although the latter term is somewhat ambiguous in the sense that, technically, scintiallation counters can also be thought of as solid detectors, it has come into wide-spread use to characterize only those devices that are based on electron–hole pair collection from semiconductor media.

In addition to superior energy resolution, solid-state detectors can also have a number of other desirable features. Among these are compact size, relatively fast timing characteristics, and an effective thickness that can be varied to match the requirements of the application. Drawbacks may include the limitation to small sizes and the relatively high susceptibility of these devices to performance degradation from radiation-induced damage.

Of the available semiconductor materials, silicon predominates in the diode detectors used primarily for charged particle spectroscopy. Germanium is more widely used in ion-drifted detectors for γ-ray measurements. In silicon and germanium, the material with highest available purity tends to be p-type, in which the best refining processes have left a predominance of acceptor impurities. Donor atoms must therefore be added to the material to accomplish the desired compensation. The alkali metals, such as lithium, sodium, and potassium, tend to form interstitial donors in crystals of silicon or germanium. The ionized donor atoms that are created when the donated electron is excited into the conduction band are sufficiently mobile at elevated temperatures so that they can be made to drift under the influence of a strong electric field. Of the examples mentioned earlier, only lithium can be introduced into silicon or germanium in sufficient concentration to serve as a practical compensating impurity. Instruments made from such material are known as Ge(Li) and Si(Li) detectors.

C. Neutron Dose

Neutrons are detected by observing the result of their interactions with atomic nuclei. Detection may be essentially instantaneous as in observing (1) the recoil nucleus from an elastic or inelastic scattering collision, (2) the charged particles arising from nuclear reactions, (3) the γ rays emitted in inelastic scattering, (4) the fission product

recoils or γ rays accompanying nuclear fission, and (5) the one or more γ rays following neutron capture or a secondary process immediately following the neutron capture. Detection at a later time may be achieved by observation of the radioactive disintegrations of either fission products or unstable nuclei produced by neutron capture.

As in the case of photon radiation (X and γ rays) the direct ionizing effects of neutrons are negligible, and detection methods are based on ionization by charged particles produced directly or indirectly as a result of the processes described above. Hence neutron detectors commonly utilize devices that respond to other ionizing radiations, and an important problem is discrimination between neutrons and other radiations, particularly γ radiation. Examples of techniques used for such discrimination are pulse–height discrimination, pulse–shape discrimination, observation of recoil tracks in photographic emulsions, and paired ionization chambers. While discrimination may be relatively simple in a detector that needs only to give an indication of the presence of neutrons, the measurement of neutron flux density, or spectrum of absorbed dose, usually requires a detailed understanding of the operation of the detector in order to obtain acceptable accuracy. If radiation energies are less than several MeV, devices depending on delayed processes can usually be counted upon to discriminate against everything but neutrons, but, as a rule, activation methods require a knowledge of the neutron spectrum for interpretation of the results. However, a series of detectors, such as neutron threshold detectors or resonance detectors, can furnish approximate information about the neutron spectrum.

Determinations of kerma and absorbed dose may be made using (1) ionization methods as utilized in ionization chambers and proportional counters, (2) calorimetry, (3) chemical systems such as photographic film and liquid chemical dosimeters, (4) neutron fluence and spectrum measurements with the employment of fluence-to-kerma conversions, or (5) special counting devices that have their response adjusted so that they are approximately proportional to kerma or absorbed dose over a range of neutron energies.

Some common types of detectors should be mentioned.

The inherently low efficiency of fast neutron detectors is increased by adding moderating material since neutron cross sections increase rapidly with decreasing energy. By happy circumstance, the response of spherical detectors, known as Bonner spheres, can be made to approximate that of relative dose equivalent per neutron. It is virtually the only monitoring instrument that can provide realistic neutron dose estimates over the many decades of neutron energy ranging from thermal energies to the MeV range.

An instrument known as the Hurst dosimeter has been used for shielding experiments for more than 30 years. It consists of a tissue-equivalent gas-filled chamber operated as a proportional counter. Its response, as a function of energy, is very close to that of the energy absorption of neutrons in tissue.

D. Neutron Energy Spectrum

Methods of measuring neutron energy spectra may be considered to be in three classes: (1), activation foils that measure the neutron flux and its spectrum through the radioactivity induced, (2) time-of-flight spectroscopy that depends on resolving the neutron spectrum by noting the time of arrival at a detector after a neutron pulse has been generated by an accelerator beam, and (3) instruments that depend on neutron interactions of various kinds which result in measurable pulses from the detector.

The use of activation detectors depends on a knowledge of the activation cross section as a function of energy. The cross sections of the most useful materials have a threshold behavior. Using many materials the activation response results may be "unfolded" to yield the energy spectrum. At best only the gross features of the spectrum can be determined, but the method has the great advantage that measurements can be taken in a hostile environment such as within a nuclear reactor. Typical useful nuclides are ^{19}F, ^{24}Mg, ^{27}Al, ^{56}Fe,^{59}Co, ^{59}Ni, ^{65}Cu, ^{115}In, and ^{197}Au.

Time-of-flight methods are possible with pulsed sources and are employed routinely to determine the spectrum for neutron cross-section measurements and also have occasionally been used to measure shield efficiency. These measurements have constituted "benchmark" results for use in verifying calculational methods and their underlying cross-section data.

Instruments useful for neutron spectroscopy have been based on several reactions. Types based on the ^{6}Li(n, α) reaction includes the lithium iodide scintillator, lithium glass scintillator, and the lithium sandwich spectrometer. Another group, based on the ^{3}He(n, p) reaction, includes the ^{3}He semiconductor sandwich spectrometer.

Other detectors are based on fast neutron scattering and generate proton recoils. These can be proton recoil scintillators, gas recoil proportional counters, and proton recoil telescopes. An advantage of a scintillator such as NE 213, mentioned earlier, is that neutron and γ-ray spectra may be measured simultaneously, the pulses from each being easily separated.

XI. COMPUTING TECHNOLOGY FOR RADIATION TRANSPORT

A. The Information Analysis Center Concept

The Radiation Safety Information Computational Center—RSICC (formerly known as the Radiation Shielding

Information Center) at Oak Ridge National Laboratory (ORNL) functions as an information analysis center to provide the needed information, numerical data, and computer codes necessary for an engineer to solve radiation transport problems. The concept of an information analysis center was defined in 1963 by a panel of the President's Science Advisory headed by Dr. Alvin M. Weinberg, and the report is generally identified by his name. The Weinberg report dealt with the problem of the ever-expanding amount of information becoming available (the so-called information explosion) and made recommendations for alleviating the general problem.

One of the suggestions of the Weinberg report was that more and better specialized information centers are needed. These are neither technical libraries nor documentation centers but rather consist of information analysis activities designed to collect, organize, evaluate, compress, and disseminate information in a specialized field. A center is built around trained, experienced technical specialists and is located where the relevant science is flourishing. The handling of actual data may or may not be done, a data center being a special type of information center. The types of output can vary greatly but include specialized journals, review articles, bibliographies and abstracts of literature (carefully indexed or sorted), compilations of data, personalized conferring regarding specific problems, current awareness notification of published literature (selective-dissemination-of-information or SDI), newsletters, and computer programs. Some activities are not quite so tangible; these would include catalytic functions (i.e., stimulating needed research) and leadership in effecting better information exchange and application.

B. The Radiation Safety Information Computational Center

The Radiation Shielding Information Center (RSICC) functions within the ORNL Radiation Information Analysis Section, a section of the ORNL Computational Physics and Engineering Division that has long been engaged in shielding and radiation transport research.

RSICC interactions with scientists and engineers engaged in radiation protection and shielding analysis, design, or research are based on mutual exchange. Users contribute to the RSICC collection by providing RSICC with reports of research results and making available newly developed computer codes or data files. The Center is supported by several government agencies (the U.S. Department of Energy and the U.S. Nuclear Regulatory Commission) in support of their programs and to provide a cost-effective method of exchange of information, computer codes, and computer-readable numeric data.

1. Literature System

In order to prepare review articles and to organize the information, the available literature is acquired continually and each article, if suitable, is indexed and filed for later retrieval. Abstract journals and accession lists are regularly scanned to learn of new literature of interest although many articles are sent directly to the Center by authors. When material is ordered, the titles are announced in the monthly RSICC newsletter to provide a prompt announcement of new literature.

When the literature is reviewed by RSICC and accepted for inclusion in the computer-based retrieval system, each article is indexed according to a hierarchical system. In the "shielding" system there are more than 100 numbered categories in the following groups:

1. Basic Nuclear and Atomic Information (source data, collision processes, and cross sections)
2. Radiation effects
3. Transport theory
4. Experimental techniques (facilities and instruments)
5. Results of radiation transport calculations and experiments for simple geometries
6. Shield design techniques for complex systems
7. Shielding materials

2. Computer Codes Collection

One of the most significant operations of the Center is in the collection, packaging, and dissemination of computer code packages. The word "package" is used by the Center to mean all items needed to place a computer code into operation. These items are not only computer materials, such as tapes, diskettes, and program listings, but also documentation describing the theory, program, auxiliary routines, and data libraries. A sample problem is also included in a package so that each new user can verify that the code is operable at his installation and gives the same result that it gives at the Center.

Each operating code, after checkout at the Center, is assigned a number and assembled with documentation into a package. It is then ready for distribution, usually by a reel of magnetic tape sent to the Center by a requester. An important service of the Center is that the most up-to-date version of a code is maintained. If errors are corrected or if improvements are made by the contributor, the changes are incorporated in the code and announced in the Center's monthly newsletter.

Personnel of the Center confer with potential users to determine what codes would best serve their needs. Each user has particular requirements, experience, and computer environment, all of which can affect the choice of particular codes. Many codes require a substantial

investment of time and effort before they will yield satisfactory results. Some are more suited to basic research than engineering design. It is this advisory service that makes the essential difference between a repository and an information analysis center.

Center personnel also actively seek out new codes that are under development. They encourage and stimulate code developers to make their codes generally available. Sometimes, when important new codes are made available, RSICC will sponsor a seminar-workshop at which the theory and operation of the code are presented to a large number of potential users.

Abstracts of the codes are issued as ORNL-RSIC-13.

Through international agreements, RSICC and the OECD Nuclear Enegy Agency Data Bank in Saclay, France collaborate closely by exchanging computer codes. In this way the two Centers make shielding codes developed elsewhere available in their respective areas.

3. Data Library Collection

RSICC also collaborates closely with the National Nuclear Data Center (NNDC) at Brookhaven National Laboratory and with cross-section evaluators to make neutron and photon cross-section data available for shielding applications. The cross section files maintained by RSIC, the Data Library Collection, are generally "processed" data. That is, the very large evaluated data files for particular nuclides available from NNDC are processed by RSICC for direct used by the radiation transport codes. Such processing may create data files that are problem dependent, that is, are useful only for certain applications. Additional information on the data collection, which also includes other types of data needed for shielding analysis, is in Appendix D.

XII. RADIATION SHIELDING AND PROTECTION

Radiation shielding and protection should continue to mature as the application of nuclear energy becomes more common. There will likely be a continuation of research and development in the areas of nuclear data, calculational methods development, integral experiments, shielding design, operating reactors, and computational approaches. The same methods are applicable to blanket design of fusion reactors, and if research and design increase in that area, shielding methods will be utilized heavily in the coming decades.

A. Nuclear Data

The current version of the United States Evaluated Nuclear Data File is ENDF/B-VI. It has a revised format to allow the representation of a variety of incident and secondary particles, not just neutrons and photons. The format allows better representation of the physics of particle interactions, particularly with regard to the specification of correlation of energy and angular distributions of secondary particles from interactions of higher energy particles. These effects are important for fusion reactor design and other applications of high enegy radiation.

ENDF/B-VI is available on an international basis (the previous version of the library, ENDF/B-V, was limited to distribution within the United States). In the future, however, there is likely to be more international cooperation. Japan and the European countries that are members of the OECD Nuclear Energy Agency have evaluated cross section libraries using the same format as ENDF, and the availability of ENDF/B-VI will open the door to closer collaboration.

B. Methods Development

There is considerable interest in the development of three-dimensional deterministic methods for radiation transport. Efforts are underway at several institutions to develop discrete ordinates, finite element, and other methods, whose current mainstream use is limited to two-dimensional geometries. The increasing availability of super computers makes the developments more practical.

There is also much continuing development of the Monte Carlo method, particularly with regard to making the method easier to use. These attempts are toward interactive specification and testing of the input, particularly the complex geometry, and toward more automated application of importance sampling. The approach will be to perform the actual tracking of particles on large, fast computers, save all the informtion on a storage medium, and perform the analysis interactively on a microcomputer or work station. Such an approach allows the time-consuming part of the calculation to be done on a very fast computer and the analysis of a given problem to be done in a variety of ways that might not be apparent in advance.

There will also be an increasing use of artificial intelligence techniques and "expert systems" tied to some of the more complex calculational tools so that experience can be built in to the method itself.

C. Verification of Methods

The verification of methods through the use of calculational benchmarks, experimental benchmarks, and measurements at operating facilities will continue. In the immediate future, the experimental benchmarks will continue to focus on fast reactor and fusion reactor applications.

There will be a continued emphasis on measurements and calculations at operating facilities to assure that exposure of personnel conforms to the ALARA concept.

D. Shielding Design

The shield designer will be concerned with optimizing the design to reduce the cost of major facilities. Material selection and placement are very important because the shielding is a significant part of the capital cost of a new plant. This also is important for the design of power-producing reactors for space vehicle applications where the payload weight is a critical element in the cost of launching.

The analyst at an operating plant will need tools for fast, on-site calculations to help in the design and placement of temporary shielding required for routine operational activities.

E. Trends in Computing

There are at leat two directions in which computational methods are going: toward the increasing use of parallel computers and toward the increasing use of personal computers. On the one hand, the easier access to super computers allows for the solution of ever more complex and lengthy calculations. Methods developers can think in terms of realistic three-dimensional deterministic methods. Some methods are able to take advantage of vector processing capabilities of such computers and reduce run time significantly. There is also much activity in utilizing parallel processor computers for certain classes of radiation transport problems. Methods that are amenable to that approach should be able to be executed with orders of magnitude in time savings.

At the same time, more analysts have access to personal computers at work and home. More and more of the computer codes that formerly were run only on mainframe machines are now being run, at little cost, on personal computers.

A final trend to be noted is that the field is moving rapidly toward the use of standard FORTRAN compilers that enhances the ability to exchange computational tools used for shielding and radiation protection.

F. Information Exchange

The Radiation Safety Information Computational Center will continue to serve as the focus of activities to assure that methods for analyzing radiation transport are available to the international shielding and protection community.

XIII. APPENDIX A: COMPUTER CODES FOR RADIATION TRANSPORT

The Radiation Shielding Information Center at Oak Ridge National Laboratory, as an integral part of its information processing activities, collects, makes operable, packages, and distributes computer code packages to nuclear scientists and engineers engaged in shielding research or design. The various codes are designed for calculations related to radiation from reactors, radioisotopes, weapons, and accelerators and to radition occurring in space. The Center uses the word "package" to mean all the items needed to utilize a code effectively. The package normally includes documentation describing the theory and code operation (contributor's report plus RSIC abstract and notes) and one or more reels of tape on which is written the source program, input and output for a sample problem, data libraries, and auxiliary routines.

Most of the codes are written in FORTRAN, which makes them somewhat independent of computer type. Several of the packages actually represent coding systems. These are represented in the collection by prototypes, which are not necessarily useful in themselves, but which achieve generality in that they are designed to be easily changed. Such code systems are most useful to the research worker who will invest a great deal of effort in learning to use the system.

The radiation treated by the majority of the codes is either neutron or γ radiation, but some codes are for charged particles. The types of geometry treated vary widely, with a few codes allowing quite a general geometry.

The neutron and γ-ray codes are used for nuclear reactor, shelter, radioisotope, and neutron-generator shielding. The energy range considered is generally less than about 15 MeV.

Most of these codes incorporate solutions to the Boltzmann transport equation (or use results of such solutions). Some codes calculate dose rates while others calculate energy spectra and angular distributions as well. The most generally used methods are outlined below.

A. Kernel Integration Method

If the dose rate at various distances from a point isotropic source is known from experiment or calculation, one can integrate over any source region to obtain the dose rate at given points. Codes using this method are very fast (and thus are often used for parameter studies) and can give reasonably good results, especially for γ-ray transport if the system is essentially homogeneous. In the case of neutrons, the system must also be hydrogenous. This method can account for inhomogeneities only very approximately.

The method is discussed in more detail in Section V.B.

B. Monte Carlo Method

The Monte Carlo method is very popular, especially as a research tool, because any geometry or process can be accounted for in principle. This technique might be described as a theoretical experiment in which many particles are released from the source and their subsequent life histories traced.

The main problem with this method is the difficulty of ascertaining that sufficient samples hve been obtained. Often straightforward (analog) methods will not yield sufficient sampling of histories important to the answer desired. Thus complicated importance sampling (biasing or variance reduction) techniques are introduced, but these do not always succeed in improving results.

For three-dimensional problems, Monte Carlo is the only rigorous method, although, to a limited extent, discrete ordinates methods are being developed and may make a significant impact in future years as more super computers become available.

The method is discussed in more detail in Section VII.

C. Discrete Ordinates Method

The Boltzmann equation may be cast in a finite-difference form and solved iteratively. The discrete ordinates codes were originally developed to calculate the reactivity of nuclear chain reactors, but are now being routinely applied to neutron and γ-ray shielding problems.

In the general case, the transport equation involves the variables of position $\mathbf{r}$, direction $\mathbf{\Omega}$, energy E, and time t, and, dependent on these, the neutron flux density ϕ. The discrete ordinates method, which basically is a quadrature method over $\mathbf{\Omega}$, is applied to the transport equation as one of several steps in the solution of that equation. More explicitly, it furnishes a means for replacing ϕ by a set of functions ϕ_j, $j = 1, 2, \ldots, n$, not dependent on $\mathbf{\Omega}$. The ϕ_j are the ordinates in the quadrature and n specifies the order of precision. The effect of applying the method is that an integrodifferential equation in the angular flux ϕ is transformed into a set of much simpler differential equations in the ordinate fluxes.

The energy dependence is handled by a "multigroup" treatment. That is, cross sections averaged over an energy range, or group, must be supplied and the output directional fluxes are averaged over each group.

For one-dimensional problems, this is usually the recommended method since computer time is short even for relatively many groups and high order angular quadrature.

For two-dimensional problems, computer time is much greater. The advantages compared to Monte Carlo is that statistical variation is avoided and solutions for the flux density are obtained throughout the system. Several two-dimensional codes are now available.

The method is discussed in more detail in Section VI.A.

D. Others

Other transport methods such as removal-diffusion (Spinney method), invariant imbedding, spherical harmonics, and moments method are represented in the collection, but are useful only for research, not for routine transport calculations.

There are also codes in the RSICC (Radiation Safety Information Computational Center) collection that solve the single-scattering problem, integrate emergin radiation from a surface, determine fission product inventories, optimize shield weight, solve design problems of shipping casks for radioactive material, determine radioactive fallout protection factors in buildings, determine neutron spectra from activation measurements, or solve other problems connected with shielding, including some which treat charged-particle transport.

E. Typical Codes

A short list of typical codes is given in Table IV. These are among the most used, and may not represent the best choice for a particular user, since the user's specific

TABLE IV Typical Computer Codes Used for Radiation Transport Calculations

CCC number/code name	Radiation type	Method	Geometry	Comments
CCC-645/QAD-CGP-A	Photon, neutron	Kernel	3-D	Combinatorial geometry
CCC-396/QADMOD-G	Photon	Kernel	3-D	γ Ray only
CCC-322/S^3	Photon	Kernel	3-D	Treats scattering
CCC-418/SCAP-82	Photon	Kernel	3-D	Treats scattering
CCC-474/MORSE-CGA	Neutron, photon	Monte Carlo	3-D	Combinatorial geometry, multigroup
CCC-700/MCNP4C	Neutron, photon	Monte Carlo	3-D	Point energy
CCC-331/EGS	Electron, photon	Monte Carlo	3-D	Electromagnetic cascade
CCC-254/ANISN-ORNL	Neutron, photon	Discrete ordinates	1-D	Multigroup
C-650/DOORS	Neutron, photon	Discrete ordinates	2-D	Multigroup
CCC-618/PTRAN	Proton	Monte Carlo	3-D	
CCC-638/TART98	Neutron, photon	Monte Carlo	3-D	Multigroup
CCC-547/DANTSYS	Neutron, photon	Monte Carlo	3-D	Multigroup

requirements and computing environment are important factors in making a choice.

XIV. APPENDIX B: COMPUTER CODES FOR CROSS-SECTION PREPARATION

Most methods of radiation transport calculations do not use the evaluated data directly. Rather, "processing" the data is required to transform it into the particular form required by the method. For example, the discrete ordinates methods require a multigroup form that is produced by averaging the evaluated data over energy intervals using an appropriate weighting function.

Most evaluated data are from ENDF/B or other sources that use the same format. The format of ENDF/B is quite general and a major commitment is required to be able to develop and maintain a system that will process data from ENDF/B into forms that can be used in a radiation transport code.

For that reason, RSIC collects and maintains computer code systems that perform the processing required by the most commonly used radiation transport methods. Such processing systems have generally been developed by the larger research centers for their own use, but in some cases processing systems were developed with the intention that they be placed into RSIC and serve the needs of a wider group of users, usually within one particular discipline of radiation transport. It is often true that such systems find applications in other disciplines.

Computer codes in this category are part of the Peripheral Shielding Routines (PSR) collection that is maintained and distributed by RSIC. Some typical processing systems are listed in Table V.

TABLE V Typical Multigroup Cross-Section Processing Systems

Name	Radiation type	Output form
PSR-13/SUPERTOG	Neutron	Multigroup D.O.[a]
PSR-49/DINT	Photon	Multigroup D.O.
PSR-315/AMPX-77	Neutron, photon	Multigroup D.O.
PSR-73/CODAC	Neutron	Multigroup M.C.[b]
PSR-349/FEDGROUP-R	Neutron	Multigroup D.O.
PSR-132/MACK-IV	Neutron, photon	Multigroup KER[c]
PSR-157/PUFF2	Neutron	Multigroup COV[d]
PSR-480/NJ	Neutron, photon	Multigroup D.O., COV
PSR-194/FEDGROUP-C86	Neutron	Multigroup D.O.

[a] D.O., Discrete ordinates.
[b] Monte Carlo.
[c] Kerma factors.
[d] Covariance.

TABLE VI Typical Computer Codes for Detector Response Determination

Name	Radiation type	Detector type
PSR-14/05S	Neutron	Organic scintillator
PSR-62/MORN	Photon	Sodium iodide
PSR-82/DENIS	Neutron	Liquid scintillator
PSR-99/SPEC-4	Neutron	Proton recoil
PSR-141/ELAN	Neutron	Activation
PSR-195/REPC	Neutron	Reactions in tissue
PSR-209/GAMX1	Photon	Semiconductors
PSR-361/DETAN95	Neutron	Multigroup
PSR-267/SCINFUL	Neutron	Scintillator
PSR-232/MARINA	Gamma	Scintillator
PSR-233/LSL-MQ	Neutron	Activator

XV. APPENDIX C: COMPUTER CODES FOR RESPONSE DETERMINATION AND ENERGY SPECTRA UNFOLDING

A. Detector Response

Most codes that predict detector response are based on the Monte Carlo method. They are tailored to a particular detector geometry, material, and compute the physical effect that gives rise to the detector signal such as the light emission of a scintillator. Such codes are available from the Radiation Shielding Information Center Peripheral Shielding Routines (PSR) code collection. Typical codes are listed in Table VI.

B. Energy Spectra Unfolding

The determination of the energy spectrum from detector pulse heights or other data is called "unfolding." There are two broad classifications called "few-channel" and "many-channel," and the unfolding algorithms used are quite different for the two types of measurements. Typically the few-channel case is represented by a set of foil activation responses. The many-channel detector measurement is typically a pulse–height distribution from a multichannel analyzer. Typical codes available from RSIC are listed in Table VII.

XVI. APPENDIX D: DATA LIBRARIES FOR RADIATION TRANSPORT ANALYSIS

The Radiation Shielding Information Center (RSIC) has long provided multigroup cross sections in working format as part of its Data Library Collection (DLC).

The term "working" format generally means that the particular multigroup library can be read directly into a

TABLE VII Typical Computer Codes for Spectra Unfolding

Name	Radiation type	Detector type
PSR-28/AMUSE	Photon	Scintillator
PSR-31/SWIFT	Neutron	Bonner sphere
PSR-41/MAZE	Neutron, photon	Scintillator
PSR-45/GAUSS	Photon	Semiconductor
PSR-80/FATDUD	Neutron	Activation
PSR-92/FORIST	Neutron, photon	Scintillator
PSR-99/SPEC-4	Neutron	Proton recoil
PSR-102/FERDO/FERD	Neutron, photon	Scintillator
PSR-113/STAY'SL	Neutron	Activation
PSR-145/FERRET	Neutron	Activation
PSR-161/WINDOWS II	Neutron	Activation
PSR-266/SPUNIT	Neutron	Bonner sphere
PSR-273/FERD-PC	Neutron, gamma	Scintillator
PSR-249/REFERDO	Neutron	Scintillator
PSR-233/LSL-M2	Neutron	Activation

discrete ordinates code to solve a radiation transport problem. No further processing can be done to the data to account for temperature effects or resonance self-shielding. This normally means that the library has been processed for a particular type of problem and should subsequently be used for the same or very similar problem.

If the library has a large number of groups (more than 100), it is usually called a "finegroup" library. Because a large number of groups is used, the cross section detail can be represented to a greater degree than with a small number of groups. This extends the usefulness to a wider range of applications.

Broad-group (60 or fewer groups) libraries are typically generated for particular application and care is required in applying them to problems not closely related to the original application. Some broad-group libraries have seen wide usage and may not have always been used with due considerations of the particular applications. They are popular because the relatively small number of groups reduces the computer time to solve a problem, particularly if two-dimensional calculations are being performed.

To avoid using cross section libraries that may not be appropriate for a given application a user can generate a new library from the basic evaluated data file. The expense of such an approach usually makes it impractical for most users to exercise this option. An alternative is to derive application-dependent libraries from a finegroup library. Such libraries for shielding applications have become available in recent years. These utilize the AMPX or MATXS formats that allow the user access to all partial cross sections and permit him to account for temperature and self-shielding effects for a particular application.

TABLE VIII Examples of Data Libraries for Radiation Transport

Name	Energy groups	Format/application
DLC-27/AMPX01	104n, 22g[a]	Working/air, concrete
DLC-37/EPR	100n, 21g	Working/fusion neutronics
DLC-60/MACKLIB-IV	171n, 36g	Response/many applications
DLC-75/BUGLE-80	47n, 20g	Working/LWR shielding
DLC-87/HILO	66n, 21g	Working/high E(400 MeV)
DLC-113/VITAMIN-E	174n, 38g	AMPX/many applications
DLC-116/MATXS6A	80n, 24g	MATXS/many applications

[a] Denotes 104 neutron groups, 22 photon groups.

It is often very important to have reaction cross sections, response functions, covariance data, etc., be available for use in conjunction with a multigroup library.

Some representative examples of each type are listed in Table VIII.

SEE ALSO THE FOLLOWING ARTICLES

DOSIMETRY • FISSION REACTOR PHYSICS • HEALTH PHYSICS • NUCLEAR RADIATION DETECTION DEVICES • NUCLEAR REACTOR MATERIALS AND FUELS • NUCLEAR SAFEGUARDS • RADIATION EFFECTS IN ELECTRONIC MATERIALS AND DEVICES • RADIATION PHYSICS • RADIATION SOURCES • RADIOACTIVITY

BIBLIOGRAPHY

Chilton, A. B., Shultis, J. K., and Faw, R. E. (1984). "Principles of Radiation Protection," Prentice-Hall, Englewood Cliffs, NJ.

Goldstein, H. (1959). "Fundamental Aspects of Reactor Shielding," Addison Wesley, Reading, MA.

Jaeger, R. G. (ed.) (1968, 1975, 1976). "Engineering Compendium on Radiation Shielding," Vols. I, II, III, Springer-Verlag, New York.

Proceedings of the 6th Internatl. Conf. on Radiation Shielding, May 16–20, 1983, Tokyo. Japan Atomic Energy Research Institute, Tokai-mura, Naka-gun, Ibaraki-ken, 319-11 Japan.

Profio, A. E. (1979), "Radiation Shielding and Dosimetry," Wiley, New York.

Reports published by the National Council on Radiation Protection and Measurements. 7910 Woodmont Ave., Suite 1016, Bethesda, MD 20814.

Schaeffer, N. M. (ed.) (1973). "Reactor Shielding for Nuclear Engineers," U.S. Atomic Energy Commission Office of Information Services, Oak Ridge, TN. Available from NTIS as TID-25951.

Spencer, L. V., Chilton, A. B., and Eisenhauer, C. M. (1980). "Structure Shielding Against Fallout Gamma Rays from Nuclear Detonations," NBS Special Publication 570, U.S. Government Printing Office, Washington, D.C.

Tsoulfanidis, N. (1983). "Measurement and Detection of Radiation," McGraw-Hill, New York.



Radiation Sources

Richard E. Faw
J. Kenneth Shultis
Kansas State University

I. Radiation Producing Reactions
II. Radioactivity
III. Neutron Sources
IV. Sources of Gamma Photons
V. Sources of X Rays
VI. Cosmic and Solar Radiation
VII. Radiation Sources in Human Enterprises

GLOSSARY

Activity The decay rate (expected number of nuclear transformations per unit time) in a radioactive sample. Units are the becquerel (Bq) equal to one decay per second, and the curie (Ci) equal to 3.7×10^{10} decays per second.

Alpha particle The nucleus of a ^{4}He atom, composed of two neutrons and two protons and denoted by α.

Beta particle An energetic electron, denoted by β^-.

Coulomb force The electrostatic force between two charges. It is proportional to the product of the charges and inversely proportional to the square of the distance between them. The force is attractive if the charges are of opposite sign, and repulsive if of like sign.

Dose A general term for the energy transferred from radiation to matter. Specifically, the absorbed dose is the amount of energy absorbed in a unit mass of matter from ionizing radiation. Units are the gray (Gy) and rad, respectively equivalent to 1 J/kg and 100 ergs/g. Thus 1 Gy equals 100 rad.

Dose equivalent A measure of the health risk associated with the absorption of radiation in the human body. It equals the absorbed dose multiplied by a *quality factor* to correct for the relative degree of damage caused by different radiations. Units are the sievert (Sv) or rem for the dose in grays and rads, respectively.

Hadron A subatomic particle that reacts via strong nuclear forces. Hadrons include mesons (e.g., pions and kaons) and baryons (e.g., protons and neutrons). Hadrons do not include bosons (e.g., photons) and leptons (e.g., electrons, muons, and neutrinos).

Meson A subatomic particle, a subclass of hadrons, composed of an even number of other subatomic particles called quarks. Most important are the pi meson (pion) and K meson (kaon).

Nuclide A term used to refer to a particular atom or nucleus with a specific neutron number N and atomic (proton) number Z. The nuclide with N neutrons and Z protons and electrons is denoted as ^A_ZX where X is the chemical symbol (determined by Z) and $A = Z + N$

is the mass number. If the nuclide is radioactive, it is called a *radionuclide*.

Photon A quantum of electromagnetic radiation with energy $E = h\nu$ where h is Planck's constant and ν is the frequency. Photons produced by changes in the structure of a nucleus are called *gamma photons*, and those produced by atomic electron rearrangement are called *x rays*.

Positron The antiparticle of the electron with the same mass m_e but with a positive charge equal in magnitude to the negative charge of the electron. A positron, denoted by β^+, quickly after its formation annihilates with an ambient electron converting the two electron masses into two photons each with energy $m_e c^2 = 0.511$ MeV.

WE LIVE in an environment awash in radiation. Radiation reaches us from sources both inside and outside our bodies. Electromagnetic radiation of all wavelengths, including radiowaves, microwaves, radar, and light, of both manmade and natural origins, constantly, bombard us. Photons are far more prevalent in number than atoms in our universe; for every nucleon there are about 10^9 photons. Cosmic rays and the subatomic debris they create during interactions in the atmosphere also impinge on us. Neutrinos from fusion reactions in stars pervade the universe in such numbers that billions per second pass through every square centimeter of our skin. Most of this radiation, e.g., neutrinos and radio waves, fortunately, passes harmlessly through us. Other radiation such as light and longer wavelength electromagnetic radiation usually interacts harmlessly with our tissues. However, shorter wavelength electromagnetic radiation, e.g., ultraviolet light, x rays and gamma rays, and charged particles produced by nuclear reactions can cause various degrees of damage to our cells.

For radiation to produce biological damage, it must first interact with tissue to alter molecular bonds and change the chemistry of the cells. Likewise, for radiation to produce damage in structural and electrical materials, it must cause interactions that disrupt crystalline and molecular bonds. Such radiation must be capable of creating ion–electron pairs and is termed *ionizing* radiation. Fast moving charged particles, such as alpha particles, beta particles, and fission fragments, can directly ionize matter. Neutral particles, such as photons and neutrons, cannot interact electromagnetically with the electrons of the matter through which they pass; rather they cause interactions that transfer some of their energy to charged secondary particles, which in turn produce ionization as they slow.

This article treats only sources of ionizing radiation, such as electrons, protons, high-energy photons, neutrons, and similar radiations that have the ability to cause ionization, either directly or indirectly, and, thus, to induce chemical and physical changes along their passages through materials. Not included are sources of relatively lower frequency electromagnetic radiation from radio waves to ultraviolet light.

This article is divided into two parts. In the first several sections, the quantitative technical characterization of physical processes that produce ionizing radiation are reviewed. In the last section, a qualitative examination is given of the various types of radiation sources encountered in the workplace, laboratory, or medical facility.

I. RADIATION PRODUCING REACTIONS

A. Origins of Ionizing Radiation

Ionizing radiation is invariably the consequence of physical reactions, involving subatomic particles, at the atomic or nuclear level. The possible radiation-producing reactions are many, and usually, although not always, involve altering the configuration of neutrons and protons in an atomic nucleus or the rearrangement of atomic electrons about a nucleus. These reactions can be divided into two categories:

a. Radioactive Decay. In the first type of radiation producing reaction, the nucleus of an atom spontaneously changes its internal arrangement of neutrons and protons to achieve a more stable configuration. In such spontaneous *radioactive* transmutations, ionizing radiation is almost always emitted. The number of known different atoms, each with a distinct combination of Z and A exceeds 2900 nuclides. Of these, 266 are stable and are found in nature. There are also 65 long-lived radioisotopes found in nature. The remaining nuclides have been made by humans and are radioactive with lifetimes much shorter than the age of the solar system. Both naturally occurring and manmade radionuclides are the mostly commonly encountered sources of ionizing radiation.
b. Binary Reactions. The second category of radiation-producing interactions involves two impinging atomic or subatomic particles that react to form one or more reaction products. Examples include neutrons interacting with nuclei of atoms, or photons interacting with nuclei or atomic electrons. Many binary reactions, in which an incident subatomic particle x strikes an atom or nucleus X, produce only two reaction products, typically a residual atom or nucleus Y and some subatomic

particle y. These binary two-product reactions are often written as $X(x, y)Y$.

B. Energetics of Radiation Producing Reactions

In any nuclear reaction energy must be conserved. The total energy (kinetic plus rest-mass energy) of the initial particles must equal the total energy of the final products, i.e., $\sum_i [E_i + m_i c^2] = \sum_i [E_i' + m_i' c^2]$, where $E_i(E_i')$ is the kinetic energy of the ith initial (final) particle with a rest mass $m_i(m_i')$, and c is the speed of light.

Any change in the total kinetic energy of particles before and after the reaction must be accompanied by an equivalent change in the total rest mass of the particles before and after the reaction. To quantify this change in the kinetic or rest-mass energies, a so-called Q-value is defined as

$$\begin{aligned} Q &= (\text{KE of final particles}) - (\text{KE of initial particles}) \\ &= (\text{rest mass of initial particles})c^2 \\ &\quad - (\text{rest mass of final particles})c^2. \end{aligned}$$

The Q value of a nuclear reaction may be either positive or negative. If the rest masses of the reactants exceed the rest masses of the products, the Q value of the reaction is positive with the decrease in rest mass being converted into a gain in kinetic energy. Such a reaction is exothermic. Radioactive decay is such a spontaneous exothermic nuclear reaction in which the Q-value energy is converted into the kinetic energy of the products.

Conversely, if Q is negative, the reaction is endothermic. For this case, kinetic energy of the initial particles is converted into rest-mass energy of the reaction products. The kinetic energy decrease equals the rest-mass energy increase. Such reactions cannot occur unless the colliding particles have at least a certain amount of kinetic energy, the so-called *threshold energy* for the reaction. For the binary, two-product reaction $X(x, y)Y$, the threshold kinetic energy of x incident on a stationary X is

$$-\frac{m_y + m_Y}{m_y + m_Y - m_x} Q \simeq -\left(1 + \frac{m_x}{m_X}\right) Q.$$

In any reaction, linear momentum must also be conserved. Thus, the momentum of the reaction products must equal that of the reactants. For two-product nuclear reactions, conservation of linear momentum requires that the products, depending on their recoil directions, have very definite amounts of kinetic energy. By contrast, for reactions with three or more products, there is no unique division of the reaction energy, and the products generally have a continuous distribution of kinetic energies.

II. RADIOACTIVITY

A. Radioactive Decay Dynamics

The decay of a radioactive nuclide is a stochastic phenomenon. The time an individual radionuclide decays cannot be predicted; rather, only the probability of decay in a specified time interval can be predicted. The rate at which a sample of a large number of identical radionuclides decays is determined by the *radioactive decay constant* λ for the nuclide. This constant is the probability, per unit time, that a radionuclide decays in an infinitely small time interval. That λ is constant for a given radionuclide species implies that the expected number of radionuclides, $N(t)$, at time t is $N(t) = N(0)e^{-\lambda t}$, where $N(0)$ is the initial number of radionuclides in the sample. The exponential decay of radionuclides is sometimes called the *radioactive decay law*.

Generally the number of radionuclides in a sample is not of interest. Rather the *activity* $A(t)$ or rate at which a radionuclide sample decays, $dN(t)/dt$, is desired since this quantity determines the rate of radiation emission from the sample. From the radioactive decay law, it is found that $-dN(t)/dt = \lambda N(t) \equiv A(t)$, so that the activity of a radionuclide sample also decays exponentially, i.e., $A(t) = A(0)e^{-\lambda t}$. The standard unit of activity is the becquerel (Bq) equal to one radioactive decay per second. The traditional unit is the curie (Ci) $= 3.7 \times 10^{10}$ Bq (approximately the activity of 1 g of ^{226}Ra).

The rate at which a radioactive sample decays is commonly described by its *half-life* $T_{1/2}$. The half-life is the time required for half of the sample to decay, or, equivalently, for the sample activity to halve. From the radioactive decay law, it is found $T_{1/2} = \ln 2/\lambda \simeq 0.693/\lambda$.

B. Types of Radioactive Decay

There are several types of spontaneous changes (or *transmutations*) that can occur in radioactive nuclides. In each transmutation, the nucleus of the parent atom ${}^{A}_{Z}\mathrm{P}$ is altered in some manner and one or more particles of radiation are emitted. If the number of protons in the nucleus is changed, then the number of orbital electrons in the daughter atom D must subsequently also be changed, either by releasing an electron to or absorbing an electron from the ambient medium. The most common types of radioactive decay are

Gamma decay (γ): ${}^{A}_{Z}\mathrm{P}^* \rightarrow {}^{A}_{Z}\mathrm{P} + \gamma$
An excited nucleus decays (usually within 10^{-8} sec) to its ground state by the emission of one or more gamma photons. The excited parent is often the product of radioactive decay or a binary nuclear reaction.

Isomeric transition (IT): ${}^{Am}_{Z}\mathrm{P}^* \rightarrow {}^{A}_{Z}\mathrm{P} + \gamma$

This is a special case of gamma decay, in which the excited parent has a lifetime much greater than usual nuclear lifetimes (10^{-8} sec), ranging from seconds to thousands of years. Such a long-lived excited nucleus, is said to be *metastable* and is called an *isomer*.

Internal conversion (IC): ${}^{A}_{Z}\mathrm{P}^{*} \rightarrow \left[{}^{A}_{Z}\mathrm{P}\right]^{+1} + \mathrm{e}^{-}$
The excitation energy of a nucleus is used to eject an orbital (usually a K-shell) electron.

Alpha decay (α): ${}^{A}_{Z}\mathrm{P} \rightarrow {}^{A-4}_{Z-2}\mathrm{D} + \alpha$
An α particle is emitted leaving the daughter with two fewer neutrons and two fewer protons than the parent. The transition often is to an excited nuclear state of the daughter which decays by emission of one or more gamma photons.

Beta decay (β^{-}): ${}^{A}_{Z}\mathrm{P} \rightarrow {}^{A}_{Z+1}\mathrm{D} + \beta^{-} + \bar{\nu}$
A neutron in the nucleus decays to a proton. An electron (β^{-}) and anti-neutrino ($\bar{\nu}$) are emitted, which share the decay energy. The daughter is often produced in an excited nuclear state and subsequently emits gamma photons.

Positron decay (β^{+}): ${}^{A}_{Z}\mathrm{P} \rightarrow {}^{A}_{Z-1}\mathrm{D} + \beta^{+} + \nu$
A proton in the nucleus changes into a neutron. A positron (β^{+}) and neutrino (ν) are emitted, which share the decay energy. If the daughter is produced in an excited state, gamma decay results. The emitted positron, after slowing in the ambient medium, annihilates with an ambient electron producing two 0.511-MeV gamma rays.

Electron capture (EC): ${}^{A}_{Z}\mathrm{P} \rightarrow {}^{A}_{Z-1}\mathrm{D}^{*} + \nu$
An orbital electron is absorbed by the nucleus, converts a nuclear proton into a neutron, emits a neutrino (ν), and, generally, leaves the nucleus in an excited state, which decays by the emission of one or more gamma photons.

Spontaneous fission (SP):
${}^{A}_{Z}\mathrm{P} \rightarrow {}^{A_H}_{Z_H}\mathrm{D}_H + {}^{A_L}_{Z_L}\mathrm{D}_L + n\left({}^{1}_{0}\mathrm{n}\right) + m(\gamma)$
A heavy nucleus spontaneously splits or fissions into a heavy (H) and light (L) fission fragment. The fission fragments are produced in highly excited nuclear states and decays by prompt neutron and gamma photon emission within 10^{-13} sec of the fission event, releasing, on the average, n neutrons and $m\gamma$ photons. The resulting *fission products* are usually radioactive and undergo a chain of β^{-} decays releasing several delayed gamma photons and beta particles until a stable nucleus is reached.

Many radionuclides decay by more than a single decay mechanism. For example, electron capture is always in competition with positron decay. An example of a radionuclide that decays by three mechanisms is ^{40}K whose decay scheme is shown in Fig. 1.

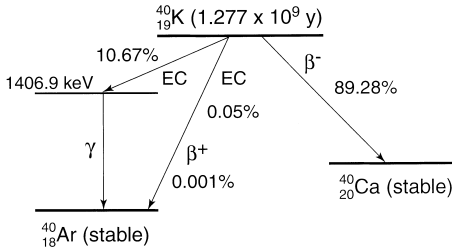

FIGURE 1 The radioactive decay scheme for ^{40}K.

In any radioactive decay that alters the proton number Z, electron rearrangements necessarily result. The resulting cascade of orbital electrons to lower energy levels results in emission of x rays and, in competition, ejection of what are called *Auger electrons*.

C. Naturally Occurring Radionuclides

1. Singly Occurring Primordial Radionuclides

Of the many radioactive species present when the earth was formed, some 17 very long-lived radionuclides still exist as singly occurring or isolated radionuclides, i.e., as radionuclides not belonging to a decay chain. Of these primordial radionuclides, only ^{40}K and ^{87}Rb contribute significantly to human exposure. The radionuclide ^{87}Rb has a half-life of 4.8×10^{10} years and decays by beta-particle emission. In the human body, its main impact is on bone-surface cells. The radionuclide ^{40}K is a major contributor to human exposure from natural radiation. Present in an isotopic abundance of 0.0118%, it has a half-life of 1.227×10^{9} years, decaying both by electron capture and beta-particle emission. Annual human doses are about 140 μGy to bone surface, 170 μGy on average to soft tissue, and 270 μGy to red marrow. ^{40}K also contributes in a major way to external exposure. The average specific activity of the nuclide in soil, 12 pCi g^{-1} (0.44 Bq g^{-1}), results in an annual whole-body dose equivalent of 120 μSv (12 mrem).

2. Decay Series of Terrestrial Origin

Two decay series, identified by the long-lived parents ^{238}U and ^{232}Th contribute appreciably to human exposure to natural radiation. Another series headed by ^{235}U contributes very little. Members of the two important series are listed in Table I. Many of the radionuclides in these series decay by emission of alpha particles with energies from 4 to 6 MeV. Others in the series emit beta particles accompanied by gamma rays. The portions of the series headed by the gases ^{220}Rn and ^{222}Rn are of special importance in public health. The gases escape from soil and rock into the atmosphere and into the airspace within homes.

TABLE I Radioisotopes in Two Naturally Occurring Primordial Decay Series

Thorium series			Uranium series		
Nuclide and decay mode		Half-life[a] $T_{1/2}$	Nuclide and decay mode		Half-life[a] $T_{1/2}$
$^{232}_{90}$Th	α	14.05 Gy	$^{238}_{92}$U	α	4.468 Gy
$^{228}_{88}$Ra	β	5.75 years	$^{234}_{90}$Th	β	24.10 days
$^{228}_{89}$Ac	β	6.13 hr	$^{234m}_{91}$Pa	β	1.17 min
$^{228}_{90}$Th	α	1.9132 years	$^{234}_{91}$Pa	β	6.69 hr
$^{224}_{88}$Ra	α	3.62 days	$^{234}_{92}$U	α	244.5 ky
$^{220}_{86}$Rn	α	55.61 sec	$^{230}_{90}$Th	α	75.4 ky
$^{216}_{84}$Po	α	0.146 sec	$^{226}_{88}$Ra	α	1599 years
$^{212}_{82}$Pb	β	10.643 hr	$^{222}_{86}$Rn	α	3.8235 days
$^{212}_{83}$Bi	α, β	60.55 min	$^{218}_{84}$Po	α, β	3.10 min
$^{212}_{84}$PO	α	0.298 μsec	$^{214}_{82}$Pb	β	26.8 min
$^{208}_{81}$Tl	β	3.053 min	$^{218}_{85}$At	α	1.5 sec
$^{208}_{82}$Pb		∞	$^{214}_{83}$Bi	α, β	19.9 min
			$^{214}_{84}$Po	α	1.637 μsec
			$^{210}_{81}$Tl	β	1.30 min
			$^{210}_{82}$Pb	β	22.6 years
			$^{210}_{83}$Bi	α, β	5.01 days
			$^{210}_{84}$Po	α	138.4 days
			$^{206}_{81}$Tl	β	4.20 min
			$^{206}_{82}$Pb		∞

[a] Gy $= 10^9$ years, ky $= 10^3$ years, μsec $= 10^{-6}$ sec.

Their daughter products, some of which emit alpha particles, may be inhaled, with risk of radiation damage to radiation-sensitive cells in the lungs potentially leading to lung cancer. ^{222}Rn and its daughters ordinarily present a greater hazard than ^{220}Rn (thoron) and its daughters, largely because the much shorter half-life of ^{220}Rn makes decay more likely prior to release into the atmosphere. Globally, the mean annual effective dose equivalent due to ^{222}Rn daughters is about 1 mSv (100 mrem) while that due to ^{220}Rn daughters is estimated to be about 0.2 mSv (20 mrem).

3. Radioactivity Produced by Cosmic Rays

Cosmic-ray interactions with constituents of the atmosphere, sea, or earth, but mostly with the atmosphere, lead directly to radioactive products. Capture of secondary neutrons produced in primary interactions of cosmic rays leads to the formation of many more radionuclides. Of the nuclides produced in the atmosphere, only ^{3}H, ^{7}Be, ^{14}C, and ^{22}Na contribute appreciably to human radiation exposure.

The tritium ^{3}H nuclide is produced mainly from interactions of neutrons with nitrogen and oxygen. Tritium has a half-life of 12.3 years and, upon decay, releases one low-energy beta particle. Tritium exists in nature almost exclusively in water form but, in foods, may be partially incorporated into organic compounds. The nuclide ^{14}C is produced mainly from the interactions of neutrons with nitrogen in the atmosphere. It exists in the atmosphere as CO_2, but the main reservoir is the ocean. It has a half-life of 5730 years and decays by beta particle emission.

III. NEUTRON SOURCES

A. Fission Neutrons

Many heavy nuclides fission after the absorption of a neutron, or even spontaneously, producing several energetic fission neutrons. Almost all of the fast neutrons produced from a fission event are emitted within 10^{-14} sec of the fission event, and are called *prompt neutrons*. Only a small fraction (generally less than 1%) of the total fission neutrons are emitted as *delayed neutrons*, which are produced by the neutron decay of fission products at times up to many seconds or even minutes after the fission event. As the energy of the neutron which induces the fission in a heavy nucleus increases, the average number of fission neutrons also increases. For example, the fission of ^{235}U by a thermal neutron (average energy 0.025 eV) produces, on the average, 2.43 fission neutrons. A fission caused by a 10-MeV neutron, by contrast, yields 3.8 fission neutrons.

Since the advent of fission reactors, many transuranic isotopes have been produced in significant quantities. Many of these isotopes have appreciable spontaneous fission probabilities, and consequently they can be used as very compact sources of fission neutrons. For example, 1 g of ^{252}Cf releases 2.3×10^{12} neutrons per second, and very intense neutron sources can be made from this isotope, limited in size only by the need to remove the fission heat through the necessary encapsulation. Almost all spontaneously fissioning isotopes decay much more frequently by α emission than by fission.

The energy dependence of the fission neutron spectrum has been investigated extensively, particularly for the important isotope ^{235}U. All fissionable nuclides produce a distribution of prompt fission-neutron energies which goes to zero at low and high energies, reaches a maximum at about 0.7 MeV, and has an average energy of about 2 MeV. The fraction of prompt fission neutrons emitted per unit energy about E, $\chi(E)$, can be described quite accurately by a Watt distribution

$$\chi(E) = ae^{-E/b}\sinh\sqrt{cE},$$

where the parameters a, b, and c depend on the fissioning isotope. For example, $a = 0.5535$ MeV, $b = 1.0347$ MeV, and $c = 1.6214$ MeV^{-1} for thermal-neutron fission of

^{235}U, whose fission-neutron spectrum is often used as an approximation for other fissioning isotopes.

B. Fusion Neutrons

Many nuclear reactions induced by energetic charged particles can produce neutrons. Most of these reactions require incident particles of very high energies for the reaction to take place and, consequently, are of little concern to the shielding analyst. Only near accelerator targets, for example, would such reaction neutrons be of concern.

One major exception to the insignificance of charged-particle-induced reactions are those in which light elements fuse exothermally to yield a heavier nucleus and which are accompanied quite often by the release of energetic neutrons. Because of the importance of nuclear fusion as a potentially practical energy source, much research is being performed with these fusion reactions. The resulting fusion neutrons are usually the major source of radiation to be shielded against. The two neutron-producing fusion reactions of most interest in the development of thermonuclear fusion power are

$$^{2}\mathrm{H} + {}^{2}\mathrm{H} \rightarrow {}^{3}\mathrm{He}\ (0.82\,\mathrm{MeV}) + {}^{1}n\ (2.45\,\mathrm{MeV})$$

$$^{2}\mathrm{H} + {}^{3}\mathrm{H} \rightarrow {}^{4}\mathrm{He}\ (3.5\,\mathrm{MeV}) + {}^{1}n\ (14.1\,\mathrm{MeV}).$$

When these reactions are produced by accelerating one nuclide toward the other, the velocity of the center of mass must first be added to the center-of-mass neutron velocity before determining the neutron energy in the laboratory coordinate system. In most designs for fusion power, the velocity of the center of mass is negligible, and the concern is with monoenergetic 2.45- or 14.1-MeV fusion neutrons. The 14.1-MeV fusion neutrons are also produced copiously in a thermonuclear explosion.

A beam of relatively low energy deuterons (100 to 300 keV) incident on a deuterium or tritium target can produce a significant number of thermonuclear neutrons. Thus, these D–D or D–T reactions are used in relatively compact accelerators, called *neutron generators*, in which deuterium ions are accelerated through a high voltage (100 to 300 kV) and allowed to fall on a thick deuterium- or tritium-bearing target. Typically in such devices, a 1-mA beam current produces up to 10^9 14-MeV neutrons per second from a thick tritium target.

C. Photoneutrons

A gamma photon with energy sufficiently large to overcome the neutron binding energy (about 7 MeV in most nuclides) may cause a (γ, n) reaction. Very intense and energetic photoneutron production can be realized in an electron accelerator where the bombardment of an appropriate target material with the energetic electrons produces intense bremsstrahlung (see Section V.B) with a distribution of energies up to that of the incident electrons. The probability a photon will cause a (γ, n) reaction increases with the photon energy, reaching a maximum over a broad energy range of approximately 20 to 23 MeV for light nuclei ($A \lesssim 40$) and 13 to 18 MeV for medium and heavy nuclei. The peak energy of this *giant resonance* can be approximated by $80A^{-1/3}$ MeV for $A > 40$. The width of the resonance varies from about 10 MeV for light nuclei to 3 MeV for heavy nuclei. Consequently, in medical or accelerator facilities that produce photons with energies above about 15 MeV, neutron production in the surrounding walls can lead to a significant neutron field.

However, the gamma photons produced in radioactive decay of fission and activation products in nuclear reactors generally have energies too low, and most materials have a photoneutron threshold too high for photoneutrons to be of concern. Only for the light elements ^{2}H, ^{6}Li, ^{7}Li, ^{9}Be, and ^{12}C are the thresholds for photoneutron production sufficiently low that these secondary neutrons may have to be considered. In heavy-water- or beryllium-moderated reactors, the photoneutron source may be very appreciable, and the neutron field deep within an hydrogenous shield is often determined by photoneutron production in deuterium, which constitutes about 0.015 atom% of the hydrogen. Capture gamma photons arising from neutron absorption have particularly high energies and thus may cause a significant production of energetic photoneutrons.

The photoneutron mechanism can be used to create laboratory neutron sources by mixing intimately a beryllium or deuterium compound with a radioisotope that decays with the emission of high-energy photons. Alternatively, the encapsulated radioisotope may be surrounded by a beryllium- or deuterium-bearing shell. A common reactor photoneutron source is an antimony–beryllium mixture, which has the advantage of being rejuvenated by exposing the source to the neutrons in the reactor to transmute the stable ^{123}Sb into the required ^{124}Sb isotope (half-life of 60.2 days).

One very attractive feature of such (γ, n) sources is the nearly monoenergetic nature of the neutrons if the photons are monoenergetic. However, in large sources, the neutrons may undergo significant scattering in the source material and thereby degrade the nearly monoenergetic nature of their spectrum. These photoneutron sources generally require careful use because of their inherently large photon emission rates. Because only a small fraction of the high-energy photons (typically, 10^{-6}) actually interact with the source material to produce a neutron, these sources generate gamma rays that are of far greater biological concern than are the neutrons.

D. Alpha–Neutron Sources

Many compact laboratory neutron sources use energetic alpha particles from various radioisotopes (*emitters*) to induce (α, n) reactions in appropriate materials (*converters*). Although a large number of nuclides emit neutrons if bombarded with alpha particles of sufficient energy, the energies of the alpha particles from radioisotopes are capable of penetrating the potential barriers of only the lighter nuclei.

Of particular interest are those light isotopes for which the (α, n) reaction is exothermic ($Q > 0$) or, at least, has a low threshold energy. For endothermic reactions ($Q < 0$), the threshold alpha energy is $-Q(1 + 4/A)$. Thus for an (α, n) reaction to occur, the alpha particle must (1) have enough energy to overcome the repulsive Coulombic force field of the nucleus, and (2) exceed the threshold energy for the reaction. Converter materials used to make practical (α, n) sources include lithium, beryllium, boron, carbon, fluorine, and sodium.

The converter nuclides ^{18}O and ^{19}F are responsible for neutron production in many areas of the nuclear fuel cycle. Alpha particles emitted by uranium and plutonium range between 4 and 6 MeV in energy and can cause (α, n) neutron production when in the presence of oxygen or fluorine. In particular, (α, n) neutrons often dominate the spontaneous fission neutrons in UF_6 or in aqueous mixtures of uranium and plutonium such as found in nuclear waste.

A neutron source can be fabricated by mixing intimately a light converter element, such as lithium or beryllium, with a radioisotope which emits energetic alpha particles. Most of the practical alpha emitters are actinide elements, which form intermetallic compounds with beryllium. Such a compound, e.g., $PuBe_{13}$, ensures both that the emitted alpha particles immediately encounter converter nuclei, thereby producing a maximum neutron yield, and that the radioactive actinides are bound into the source material, thereby reducing the risk of leakage of the alpha-emitting component.

The neutron yield from an (α, n) source varies strongly with the converter material, the energy of the alpha particle, and the relative concentrations of the emitter and converter elements. The degree of mixing between converter and emitter and the size, geometry, and source encapsulation may also affect the neutron yield. For example, a ^{239}Pu/Be source has an optimum neutron yield of about 60 neutrons/10^6 primary alpha particles.

The energy distributions of neutrons emitted from (α, n) sources are continuous below some maximum neutron energy with definite structure at well-defined energies determined by the energy levels of the converter and the excited product nuclei. The use of the same converter material with different alpha emitters produces similar neutron spectra with different portions of the same basic spectrum accentuated or reduced as a result of the different alpha-particle energies. Average energies of neutrons typically are several MeV. For example, the neutrons produced by a ^{239}Pu/Be source have an average energy of 4.6 MeV.

E. Activation Neutrons

A few highly unstable nuclides decay by the emission of a neutron. The delayed neutrons associated with fission arise from such decay of the fission products. However, there are nuclides other than those in the fission-product decay chain which also decay by neutron emission. Only one of these nuclides, ^{17}N, is of importance in nuclear reactors situations. This isotope is produced in water-moderated reactors by an (n, p) reaction with ^{17}O (threshold energy, 8.0 MeV). The decay of ^{17}N by beta emission (half-life 4.4 sec) produces ^{17}O in a highly excited state, which in turn decays rapidly by neutron emission. Most of the decay neutrons are emitted within ± 0.2 MeV of the most probable energy of about 1 MeV, although neutrons with energies up to 2 MeV may be produced.

F. Spallation Neutron Sources

In a spallation neutron source, pulses of very energetic protons (up to 1 GeV), produced by an accelerator, strike a heavy metal target such as mercury or liquid bismuth. Such an energetic proton when it strikes a target nucleus "spalls" or knocks out neutrons. Additional neutrons boil off as the struck nucleus heats up. Typically, 20 to 30 neutrons are produced per spallation reaction. These pulses of neutrons are then slowed down or thermalized by passing them through cells filled with water, or even liquid hydrogen if very slow neutrons are needed.

IV. SOURCES OF GAMMA PHOTONS

A. Radioactive Decay

Radioactive sources abound in our technological age and are used for a wide variety of purposes in many educational, medical, research, industrial, governmental, and commercial facilities. The radionuclides in these sources almost always leave their decay daughters in excited nuclear states whose subsequent transitions to lower-energy states usually results in the emission of one or more gamma photons.

B. Prompt Fission Photons

The fission process produces copious gamma photons either within the first 6×10^{-8} sec after the fission event

(the *prompt fission gamma photons*) or from the subsequent decay of the fission products. These photons are of extreme importance in the shielding and gamma-heating calculations for a nuclear reactor. Consequently, much effort has been directed toward determining their nature.

Most investigations of prompt fission gamma photons have centered on the thermal-neutron-induced fission of ^{235}U. For this nuclide it has been found that the number of prompt fission photons is 8.13 ± 0.35 photons per fission over the energy range 0.1 to 10.5 MeV, and the energy carried by this number of photons is 7.25 ± 0.26 MeV per fission. The energy spectrum of prompt gamma photons from the thermal fission of ^{235}U between 0.1 and 0.6 MeV is approximately constant at 6.6 photons MeV^{-1} fission^{-1}. At higher energies the spectrum falls off sharply with increasing energy. The measured energy distribution of the prompt fission photons can be represented by the following empirical fit over the range 0.1 to 10.5 MeV:

$$N(E) = \begin{cases} 6.6 & 0.1 < E < 0.6 \text{ MeV} \\ 20.2e^{-1.78E} & 0.6 < E < 1.5 \text{ MeV} \\ 7.2e^{-1.09E} & 1.5 < E < 10.5 \text{ MeV}, \end{cases}$$

where E is in MeV and $N(E)$ is in units of photons MeV^{-1} fission^{-1}.

Investigation of ^{233}U, ^{239}Pu, and ^{252}Cf indicates that the prompt fission photon energy spectra for these isotopes resembles very closely that for ^{235}U, and hence for most purposes it is reasonable to use the ^{235}U spectrum for other fissioning isotopes.

C. Fission-Product Photons

With the widespread application of nuclear fission, an important concern is the consideration of the very long lasting gamma activity produced by the decay of fission products.

In the fission process, most often two fragments are produced (*binary fission*) with a distribution in mass shown in Fig. 2. About 0.3% of the time a third light fragment is produced (*ternary fission*), most often ^{3}H. As seen in Fig. 2, the mass distribution or *fission-product chain yield* is bimodal, with many products having atomic mass number around 95 and around 140. Among the former are the important long-lived radionuclide ^{90}Sr, several isotopes of the halogen bromine, and various isotopes of the noble gas krypton. Among the heavy fragments are the important long-lived radionuclide ^{137}Cs, radioisotopes of halogen iodine, notably ^{131}I, and isotopes of the noble gas xenon. The fission products are neutron rich and decay almost exclusively by β^- emission, often forming long decay chains. From the range of mass numbers produced

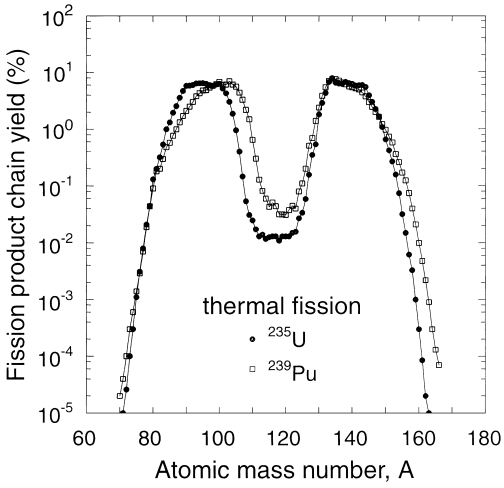

FIGURE 2 The probability (%) that a fission product with mass number A is produced in the thermal-neutron induced fission of ^{235}U and ^{239}Pu.

(see Fig. 2), about 100 different decay chains are formed. An example of a short chain is

$$^{140}_{54}\text{Xe} \xrightarrow[16\text{ s}]{\beta^-} {}^{140}_{55}\text{Cs} \xrightarrow[66\text{ s}]{\beta^-} {}^{140}_{56}\text{Ba} \xrightarrow[12.8\text{ d}]{\beta^-} {}^{140}_{57}\text{La} \xrightarrow[40\text{ h}]{\beta^-} {}^{140}_{58}\text{Ce (stable)}.$$

The total gamma-ray energy released by the fission product chains is comparable to that released as prompt fission gamma photons. The gamma-ray energy release rate declines rapidly in the time after fission. About three fourths of the delayed gamma-ray energy is released in the first thousand seconds after fission. In most calculations involving spent nuclear fuel, the gamma activity at several months or even years after removal of fuel from the nuclear reactor is of interest and only the long-lived fission products need be considered.

It has been found that the gamma energy released from fission products is relatively independent of the energy of the neutrons causing the fissions. However, the gamma-ray energy released and the photon energy spectrum depend significantly on the fissioning isotope, particularly in the first 10 sec after fission. Generally, fissioning isotopes having a greater proportion of neutrons to protons produce fission-product chains of longer average length, with isotopes richer in neutrons and hence with greater available decay energy. Also, the photon energy spectrum generally becomes less energetic as the time after fission increases.

For very approximate calculations the energy spectrum of delayed gamma photons from the fission of ^{235}U, at times up to about 500 sec, may be approximated by the proportionality $N(E) \sim e^{-1.1E}$, where $N(E)$ is the delayed gamma yield (photons MeV^{-1} fission^{-1}) and E is the

photon energy in MeV. The time dependence for the total gamma photon energy emission rate $F(t)$ (MeV sec^{-1} fission^{-1}) is often described by the simple decay formula $F(t) = 1.4t^{-1.2}$, 10 sec $< t < 10^5$ sec, where t is in seconds. More complicated (and accurate) expressions for $F(t)$ have been obtained from fits to experimental data; but for preliminary calculations the simpler result is usually adequate. It is observed that both ^{235}U and ^{239}Pu have roughly the same total gamma-ray-energy decay characteristics for up to 200 days after fission, at which time ^{235}U products begin to decay more rapidly until at 1 year after fission, the ^{239}Pu gamma activity is about 60% greater than that of ^{235}U.

For accurate calculations involving fission products, the variation with time after fission of the energy spectra of the photons must be taken into account. Often the energy spectra are averaged over discrete energy intervals and the energy emission rate in each energy group is considered as a function of time after fission. Computer codes, based on extensive libraries of radionuclide data, have been developed to compute the abundances and decay rates of the hundreds of fission-product radionuclides. An example of such calculations is shown in Fig. 3.

D. Capture Gamma Photons

The compound nucleus formed by neutron absorption is initially created in a highly excited state with excitation energy equal to the kinetic energy of the incident neutron plus the neutron binding energy, which averages about 7 MeV. The decay of this nucleus, within 10^{-12} sec, and usually by way of intermediate states, typically produces several energetic photons. Generally, the probability a neutron causes an (n, γ) reaction is greatest for slow moving *thermal neutrons*, i.e., neutrons whose speed is in equilibrium with the thermal motion of the atoms is a medium. At high energies, it is more likely that a neutron scatters, thereby loosing some of its kinetic energy and slow toward thermal energies.

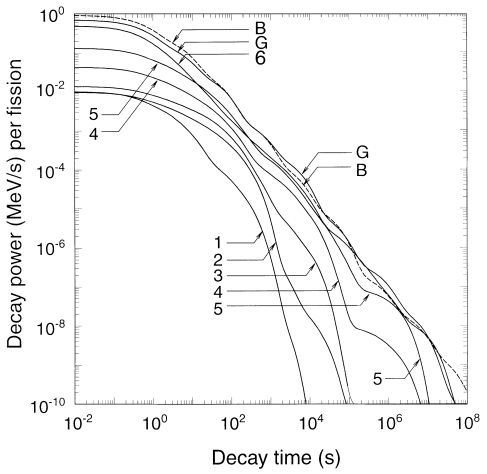

FIGURE 3 Total gamma-ray (G) and beta-particle (B) energy emission rates as a function of time after the thermal fission of ^{235}U. The curves identified by the numbers 1 to 6 are gamma emission rates for photons in the energy ranges 5–7.5, 4–5, 3–4, 2–3, 1–2, and 0–1 MeV, respectively.

Capture photons may be created intentionally by placing a material with a high thermal-neutron (n, γ) cross section in a thermal neutron beam. The energy spectrum of the resulting capture gamma photons can then be used to identify trace elements in the sample. More often, however, capture gamma photons are an undesired secondary source of radiation.

E. Inelastic Scattering Photons

The excited nucleus formed when a neutron is inelastically scattered decays to the ground state within about 10^{-14} sec, with the excitation energy being released via one or more photons. Because of the constraints imposed by the conservation of energy and momentum in all scattering interactions, inelastic neutron scattering cannot occur unless the incident neutron energy is greater than $(A + 1)/A$ times the energy required to excite the scattering nucleus to its first excited state. Except for the heavy nuclides, neutron energies above about 0.5 MeV are typically required for inelastic scattering.

The detailed calculation of secondary photon source strengths from inelastic neutron scattering requires knowledge of the fast-neutron fluence, the inelastic scattering cross sections, and spectra of resultant photons, all as functions of the incident neutron energy. The cross sections and energy spectra of the secondary photons depend strongly on the incident neutron energy and the particular nuclide. Such inelastic scattering data are known only for the more important structural and shielding materials, and even the known data require extensive data libraries. Fortunately, in most situations, these secondary photons are of little importance compared to the capture photons. Although inelastic neutron scattering is usually neglected with regard to its secondary-photon radiation, it is a very important mechanism in the attenuation of fast neutrons, better even than elastic scattering in some cases.

F. Activation Photons

For many materials, absorption of a neutron produces a radionuclide with a half-life ranging from a fraction of a second to many years. The radiation produced by the subsequent decay of these activation nuclei may be very significant for materials that have been exposed to large

TABLE II Important Radioisotopes Produced by Reactors and Accelerators for Use in Medical, Research, and Industrial Applications

Reactor produced			Accelerator produced		
Nuclide	Half-life	Decay modes[a]	Nuclide	Half-life	Decay modes[a]
^{3}H	12.33 years	β^{-}*	^{11}C	20.39 min	β^{+} EC
^{14}C	5730 years	β^{-}*	^{13}N	9.965 min	β^{+} EC
^{32}P	14.26 days	β^{-}*	^{15}O	122.2 sec	β^{+} EC
^{33}P	25.3 days	β^{-}*	^{18}F	109.8 min	β^{+} EC
^{35}S	87.44 days	β^{-}*	^{22}Na	2.602 years	β^{+} EC
^{51}Cr	27.70 days	EC	^{26}Al	7.16E5 years	β^{+} EC
^{59}Fe	44.50 days	β^{-}	^{28}Mg	20.91 hr	β^{-}
^{60}Co	5.2704 years	β^{-}	^{32}Si	450 years	β^{-}*
^{64}Cu	12.70 hr	β^{-}	^{57}Co	271.8 days	EC
^{89}Sr	50.5 days	β^{-}	^{57}Cu	233 sec	β^{+} EC
^{90}Sr[b]	28.6 days	β^{-}*	^{67}Ga	3.261 days	EC
^{99}Mo[c]	65.94 hr	β^{-}	^{81}Rb	4.576 hr	β^{+} EC
^{125}I	60.14 days	EC	^{82}Sr	25.0 days	EC
^{131}I	8.04 days	β^{-}	^{103}Pd	16.991 days	EC
^{133}Xe	5.245 days	β^{-}	^{111}In	2.83 days	EC
^{137}Cs[d]	30.0 years	β^{-}*	^{123}I	13.2 hr	EC
^{153}Sm	46.7 hr	β^{-}	^{148}Gd	93 years	α*
^{159}Gd	18.56 hr	β^{-}	^{201}Tl	73.1 hr	EC
^{186}Re	90.64 hr	β^{-} EC			
^{192}Ir	73.831 days	β^{-} EC			
^{198}Au	2.696 days	β^{-}			
^{204}Tl	3.779 years	β^{-} EC			

[a] Decays without any gamma photon emission are denoted by *.
[b] In equilibrium with decay product ^{90}Y (64.1 hr, β^{-}).
[c] In equilibrium with decay product ^{99m}Tc (6.02 hr, IT).
[d] In equilibrium with decay product ^{137m}Ba (2.55 min, β^{-}).

neutron fluences, especially structural components in a reactor or accelerator. Many radionuclides encountered in research laboratories, medical facilities, and industry are produced as activation nuclides from neutron absorption in some parent material (see Table II). Such nuclides decay, usually by beta emission, leaving the daughter nucleus in an excited state which usually decays quickly to its ground state with the emission of one or more gamma photons (see Section II.B). Thus, the apparent half-life of the photon emitter is that of the parent (or activation nuclide), while the number and energy of the photons is characteristic of the nuclear structure of the decay daughter.

Although most activation products of concern in shielding problems arise from neutron absorption, there is one important exception in water-moderated nuclear reactors. The ^{16}O in the water can be transmuted to ^{16}N in the presence of fission neutrons by an (n, p) reaction with a threshold energy of 9.6 MeV. ^{16}N decays with a 7.4-sec half-life emitting gamma photons of 6.13 and 7.10 MeV (yields of 0.69 and 0.05 per decay). This activity is very important in coolant channels of power reactors.

G. Positron Annihilation Photons

Positrons, generated either from the positron decay of radionuclides or from pair production interactions induced by high-energy photons, slow down in matter within about 10^{-10} sec and are subsequently annihilated with electrons. With rare exception, the rest-mass energy of the electron and positron is emitted in the form of two annihilation photons, each of energy $m_e c^2$ (=0.511 MeV).

V. SOURCES OF X RAYS

The interaction of photons or charged particles with matter leads inevitably to the production of secondary x-ray photons. The x rays in many applications have energies $\lesssim$100 keV and hence are easily attenuated by any shield adequate for the primary radiation. Consequently, the secondary x rays are often completely neglected in analyses involving higher-energy photons. However, there are important situations in which x-ray production is the only source of photons. To estimate the intensity, energies, and doses from the x-ray photons, it is necessary to understand how the x rays are produced and some characteristics of the production mechanisms. There are two principal methods whereby secondary x-ray photons are generated: the rearrangement of atomic electron configurations leads to characteristic x rays, and the deflection of charged particles in the nuclear electric field results in bremsstrahlung.

A. Characteristic X Rays and Fluorescence

The electrons around a nucleus are arranged in shells or layers, each of which can hold a maximum number of electrons. The two electrons in the innermost shell (K shell) are the most tightly bound, the six electrons in the next shell (L shell) are the next most tightly bound, and so on outward for the M, N, ... shells. If the normal electron arrangement around a nucleus is altered, say by ejection of an inner electron, the electrons begin a complex series of transitions to vacancies in the inner shells (thereby acquiring higher binding energies) until the unexcited state of the atom is achieved. In each electronic transition, the difference in binding energy between the final and initial states is either emitted as a photon, called a *characteristic x ray*, or given up to another electron which is ejected from the atom, called an *Auger electron*. The discrete electron energy levels and the transition probabilities between levels vary with the Z number of the atom, and thus the

characteristic x rays provide a unique signature for each element.

The number of x rays with different energies is greatly increased by the multiplicity of electron energy levels available in each shell (1, 3, 5, 7, ... distinct energy levels for the K, L, M, N, ... shells, respectively). To identify the various characteristic x rays for an element, many different schemes have been proposed. One of the more popular uses the letter of the shell whose vacancy is filled together with a numbered Greek subscript to identify a particular electron transition (e.g., $K_{\alpha 1}$ and $L_{\gamma 5}$).

1. Production of Characteristic X Rays

There are several methods whereby atoms may be excited and characteristic x rays produced. A photoelectric absorption leaves the absorbing atom in an ionized state. If the incident photon energy is sufficiently greater than the binding energy of the K-shell electron, which ranges from 14 eV for hydrogen to 115 keV for uranium, it is most likely (80 to 100%) that a vacancy is created in the K shell and thus that the K series of x rays dominates the subsequent secondary radiation. These x-ray photons produced from photoelectric absorption are often called *fluorescent radiation* and are widely used to identify trace elements in a sample by bombarding the sample with low-energy photons from a radioactive source or with x rays from an x-ray machine and then observing the induced fluorescent radiation.

Characteristic x rays can also arise following the decay of a radionuclide. In the decay process known as *electron capture*, an orbital electron, most likely from the K shell, is absorbed into the nucleus, thereby decreasing the nuclear charge by one unit. The resulting K-shell vacancy then gives rise to the K series of characteristic x rays. A second source of characteristic x rays which occurs in many radionuclides is a result of *internal conversion*. Most daughter nuclei formed as a result of any type of nuclear decay are left in excited states. This excitation energy may be either emitted as a gamma photon or transferred to an orbital electron which is ejected from the atom. Again it is most likely that a K-shell electron is involved in this internal conversion process.

2. X-Ray Energies

To generate a particular series of characteristic x rays, an electron vacancy must be created in an appropriate electron shell. Such vacancies are created only when sufficient energy is transferred to an electron in that shell so as to allow it to break free of the atom or at least be transferred to an energy level above all the other electrons. The characteristic x rays emitted when electrons fill a vacancy in a shell will always have less energy than that required to create the vacancy. The most energetic x rays arise from an electron filling a K-shell vacancy and, since the binding energy of K-shell electrons increases with the atomic number Z, the most energetic x rays are K-shell x rays from heavy atoms. For example, the K_α x-ray energy varies from only 0.52 keV for oxygen ($Z = 8$) to 6.4 keV for iron ($Z = 26$) to 98 keV for uranium ($Z = 92$). By comparison, the L series of x rays for uranium occurs at energies around 15 keV. Thus, in most shielding situations, only the K series of x rays from heavy elements are sufficiently penetrating to be of concern.

3. X-Ray Yields

The *fluorescent yield* of a material is the fraction of the atoms with a vacancy in an inner electron shell that emit an x ray upon the filling of the vacancy. The fluorescent yield increases dramatically with the Z number of the atom. For example, the fluorescent yield for vacancies in the K shell increases from 0.0069 for oxygen ($Z = 8$) to 0.97 for uranium ($Z = 92$). Thus, the secondary fluorescent radiation is of more concern for heavy materials.

B. Bremsstrahlung

A charged particle gives up its kinetic energy either by collisions with electrons along its path or by photon emission as it is deflected, and hence accelerated, by the electric fields of nuclei. The photons produced by the deflection of the charged particle are called *bremsstrahlung* (literally, "braking radiation"). For a given type of charged particle, the ratio of the rate at which the particle looses energy by bremsstrahlung to that by ionizing and exciting the surrounding medium is

$$\frac{\text{radiation loss}}{\text{ionization loss}} \simeq \frac{EZ}{700}\left(\frac{m_e}{M}\right)^2,$$

where E is in MeV, m_e is the electron mass, and M is the mass of the charged particle. From this result it is seen that bremsstrahlung is more important for high-energy particles of small mass incident on high-Z material. In shielding situations, only electrons ($m_e/M = 1$) are ever of importance for their associated bremsstrahlung. All other charged particles are far too massive to produce significant amounts of bremsstrahlung. Bremsstrahlung from electrons, however, is of particular radiological interest for devices that accelerate electrons, such as betatrons and x-ray tubes, or for situations involving radionuclides that emit only beta particles.

1. Energy of Bremsstrahlung Photons

The energy distribution of the photons produced by the bremsstrahlung mechanism is continuous up to a maximum energy corresponding to the maximum kinetic energy of the incident charged particles. The exact shape of the continuous bremsstrahlung spectrum depends on many factors, including the energy distribution of the incident charged particles, the thickness of the target, and the amount of bremsstrahlung absorbed in the target and other masking material.

For monoenergetic electrons of energy E_o incident on a target thick compared to the electron range, the number of bremsstrahlung photons of energy E, per unit energy and per incident electron, emitted as the electron is completely slowed down and can be approximated by the Kramer distribution

$$N(E_o, E) \simeq 2kZ\left(\frac{E_o}{E} - 1\right), \qquad E \leq E_o,$$

where $k \simeq 0.0007\,\mathrm{MeV}^{-1}$ is a normalization constant. The fraction of the incident electron's kinetic energy that is subsequently emitted as bremsstrahlung can then be calculated from this approximation as kZE_o, which is usually a small fraction. For example, about 10% of the energy of a 2-MeV electron, when stopped in lead, is converted into bremsstrahlung.

2. Angular Distribution of Bremsstrahlung

The angular distribution of bremsstrahlung is generally quite anisotropic and varies with the incident electron energy. Bremsstrahlung induced by low-energy electrons ($\lesssim$100 keV) is emitted over a relatively broad range of directions around the direction of the incident electron. As the electron energy increases, the direction of the peak intensity shifts increasingly toward the forward direction, until for electrons above a few million electron volts, the bremsstrahlung is confined to a very narrow forward beam. The angular distribution of radiation leaving a target is very difficult to compute since it depends on the target size and orientation. For thin targets the anisotropy of the bremsstrahlung resembles that for a single electron–nucleus interaction, while for thick targets multiple electron interactions and photon absorption in the target must be considered.

3. X-Ray Machines

The production of x-ray photons as bremsstrahlung and fluorescence occurs in any device that produces high-energy electrons. Devices that can produce significant quantities of x rays are those in which a high voltage is used to accelerate electrons, which then strike an appropriate target material. Such is the basic principle of all x-ray tubes used in medical diagnosis and therapy, industrial applications, and research laboratories.

Although there are many different designs of x-ray sources for different applications, most designs for low to medium voltage sources ($\lesssim$180 kV) place the electron source (cathode) and electron target (anode) in a sealed glass tube. The glass tube acts as both an insulator between the anode and cathode and a chamber for the necessary vacuum through which the electrons are accelerated. The anodes of x-ray tubes incorporate a suitable metal upon which the electrons impinge and generate the bremsstrahlung and characteristic x rays. Most of the electron energy is deposited in the anode as heat rather than being radiated away as x rays, and thus heat removal is an important aspect in the design of x-ray tubes. Tungsten is the most commonly used target material because of its high atomic number and because of its high melting point, high thermal conductivity, and low vapor pressure. Occasionally, other target materials are used when different characteristic x-ray energies are desired. For most medical and dental diagnostic units, voltages between 40 and 150 kV are used, while medical therapy units may use 6 to 150 kV for superficial treatment or 180 kV to 50 MV for treatment requiring very penetrating radiation.

The energy spectrum of x-ray photons emitted from an x-ray tube has a continuous bremsstrahlung component up to the maximum electron energy, i.e., the maximum voltage applied to the tube. If the applied voltage is sufficiently high as to cause ionization in the target material, there will also be characteristic x-ray lines superimposed on the continuous bremsstrahlung spectrum. Absorbing filters are used to minimize low-energy x rays, which are damaging to skin. As the beam filtration increases the low-energy x rays are preferentially attenuated and the x-ray spectrum *hardens* and becomes more penetrating.

The characteristic x rays may contribute a substantial fraction of the total x-ray emission. For example, the L-shell radiation from a tungsten target is between 20 and 35% of the total energy emission when voltages between 15 and 50 kV are used. Above and below this voltage range, the L component rapidly decreases in importance. However, even a small degree of filtering of the x-ray beam effectively eliminates the low-energy portion of the spectrum containing the L-shell x rays. The higher-energy K-series x rays from a tungsten target contribute a maximum of 12% of the x-ray emission from the target for operating voltages between 100 and 200 kV.

C. Synchrotron Photons

When a charged particle moving in a straight line is accelerated by deflecting it in a an electromagnetic field, the perturbation in the particle's electric field travels away from the particle at the speed of light and is

observed as electromagnetic radiation (photons). Such is the origin of bremsstrahlung produced when fast electrons (beta particles) are deflected by the electric field of a nucleus.

This same mechanism can be used to produce intense photon radiation by deflecting an electron beam by magnetic fields. In a special accelerator called a *synchrotron*, highly relativistic electrons are forced to move in a circular path inside a storage ring by placing *bending magnets* along the ring. Photons are emitted when the beam is accelerated transversely by (1) the bending magnets (used to form the circular electron beam), and by (2) insertion device magnets such as *undulators*, *wigglers*, and *wavelength shifters*.

Because the electrons are very relativistic, the synchrotron radiation is emitted in a very narrow cone in the direction of electron travel as they are deflected. Undulators cause the beam to be deflected sinusoidally by a weak oscillatory magnetic field, thereby producing nearly monochromatic photons. By contrast, a wiggler uses a strong oscillatory magnetic field which, because of relativistic effects, produces distorted sinusoidal deflections of the electron beam and synchrotron radiation with multiple harmonics, i.e., a line spectrum. If very strong magnetic fields are used, many harmonics are produced that merge to yield a continuous spectrum ranging from the infrared to hard x rays. By placing undulators or wigglers at a specific location in the storage ring, very intense and narrowly collimated beams of photons with energies up to a few kilo-electron volts can be produced to use in x-ray diffraction analysis.

VI. COSMIC AND SOLAR RADIATION

The earth is bombarded continuously by radiation originating from our sun, from sources within our galaxy, and from sources beyond our galaxy. The radiation as it reaches the earth's atmosphere consists of high-energy atomic nuclei. Hydrogen nuclei (protons) constitute the major component, with heavier atoms decreasing in importance with increasing atomic number. Cascades of nuclear interactions in the atmosphere give rise to many types of secondary particles. At the earth's surface, cosmic radiation dose rates are largely due to muons and electrons. The intensity and angular distribution of galactic radiation reaching the earth are affected by the earth's magnetic field and perturbed by magnetic disturbances generated by solar flare activity. Consequently, at any given location, cosmic ray doses may vary in time by a factor of 3. At any given time, cosmic ray dose rates at sea level may vary with geomagnetic latitude by as much as a factor of 8, being greatest at the pole and least at the equator. Cosmic ray dose rates also increase with altitude. At geomagnetic latitude 55°N, for example, the absorbed dose rate in tissue approximately doubles with each 2.75 km (9000 ft) increase in altitude, up to 10 km (33,000 ft).

Solar cosmic rays associated with flares are mainly hydrogen and helium nuclei. While of too low energy to contribute to radiation doses at the surface of the earth, solar-flare radiation, which fluctuates cyclically with an 11-year period, perturbs earth's magnetic field and thereby modulates galactic cosmic-ray intensities with the same period. Maxima in solar flare activity lead to minimal intensity. Solar flare radiation, in comparison to galactic cosmic rays, is of little significance as a hazard in aircraft flight or low orbital space travel. On the other hand, solar-flare radiation presents a considerable hazard to personnel and equipment in space travel outside the earth's magnetic field.

Released continuously from the sun, as an extension of the corona, is the solar wind, a plasma of low-energy protons and electrons. The solar wind does not present a radiation hazard, even in interplanetary space travel. However, it does affect the interplanetary magnetic field and the shape of the geomagnetically trapped radiation belts. These radiation belts are thought to be supplied by captured solar-wind particles and by decay into protons and electrons of neutrons created by interactions of galactic cosmic rays in the atmosphere. The trapped radiation can present a significant hazard to personnel and equipment in space missions.

As a result of nuclear reactions of cosmic rays with constituents of the atmosphere, secondary neutrons, protons, and pions, mainly, are produced. Subsequent pion decay results in electrons, photons, neutrons, and muons. Muon decay, in turn, leads to secondary electrons, as do scattering interactions of charged particles in the atmosphere. Cosmic ray debris that reach the surface of the earth consist mainly of muons and electrons with a few neutrons. Except for short-term influences of solar activity, galactic cosmic radiation has been constant in intensity for at least several thousand years. The influence of solar activity is cyclical and the principal variation is on an 11-year cycle. The geomagnetic field of the earth is responsible for limiting the number of cosmic rays which can reach the atmosphere thus accounting for a strong effect of latitude on cosmic-ray dose rates.

Solar flare particles are mostly protons and alpha particles, predominantly the former. Electrons are thought to be emitted as well, but with energies less than those of protons by a factor equal to the ratio of the rest masses. Energy spectra are highly variable, as are temporal variations of intensity. A typical course of events for a flare is as follows. Gamma and x-ray emission takes place over about 4 hr as is evidenced by radio interference. The first significant quantities of protons reach the earth after about

15 hr and peak proton intensity occurs at about 40 hours after the solar eruption.

The earth's geomagnetically trapped radiation belts are also known as Van Allen belts in recognition of James A. Van Allen and his coworkers who discovered their existence in 1958. There are two belts, the inner consisting primarily of protons, the outer of electrons. The particles travel in helical trajectories determined by the magnetic field surrounding the planet. They occur at maximum altitude at the equator and approach the earth most closely near the poles. The solar wind compresses the trapped radiation on the sunny side of the earth and the compression is enhanced by solar flare activity. In the earth's shadow, the belts are distended as the solar wind sweeps the magnetosphere outward. In a plane through the earth, perpendicular to the earth–sun axis, the proton and electron belts are maximum in intensity at altitudes of about 3000 and 18,000 km, respectively.

VII. RADIATION SOURCES IN HUMAN ENTERPRISES

Life on earth is continually subjected to radiation of natural origin. Exposure is from sources outside the body, arising from cosmic radiation and radionuclides in the environment, and from sources inside the body, arising from ingested or inhaled radionuclides retained in the body. Natural sources are the major contributors to human radiation exposure and represent a reference against which exposure to man-made sources may be compared. Table III summarizes radiation doses to man resulting from natural sources. Listed in the table are both doses to individual organs or tissues of the body and the effective dose equivalent, which is a composite dose weighted by the relative radiation sensitivities of many organs and tissues of the body.

A. Sources in Medicine

Very shortly after their discoveries at the end of the 19th century, radium and x rays were used for medical purposes—radium sources being concentrated from natural materials and x-rays being generated using new technology. These were the only radiation sources seeing significant use until the 1930s, when research into nuclear fission began and when high-energy particle accelerators were developed for nuclear research. In the first half of the 20th century, x rays revolutionized diagnostic medicine. In the second half, accelerator radiation and radionuclides produced by accelerators and nuclear reactors established radiography and nuclear medicine, diagnostic and therapeutic, as mature medical sciences. Table II lists the major radioisotopes used in medicine and industry. Some of these radionuclides are produced in nuclear reactors, either as products of fission or as products of neutron absorption. Nuclei of these isotopes are rich in neutrons and tend to decay by emission of negative beta particles, thereby becoming more positive in charge and more stable. Other isotopes are produced in accelerators. These generally have nuclei deficient in neutrons and tend to decay either by emission of a position or capture of an electron, either process leaving the nucleus more negative and more stable.

There are three broad categories of medical procedures resulting in human radiation exposure: (1) diagnostic x-ray examinations, including mammography and computed tomographic (CT) scans; (2) diagnostic nuclear medicine; and (3) radiation therapy.

1. Diagnostic X Rays

Of all the radiation exposures to the general public arising from human activity, the greatest is due to medical procedures, and collective exposures from diagnostic x rays dominate all other medical exposures. Also, the population subgroup receiving diagnostic x rays is not small. In

TABLE III Summary of U.S. Annual Doses from Natural Background Radiation[a]

Radiation sources	Average annual dose equivalent (mrem)				
	Bronchial epithelium	Other soft tissues	Bone surfaces	Bone marrow	Effective dose equivalent
Cosmic radiation	27	27	27	27	27
Cosmogenic nuclides	1	1	1	3	1
External terrestrial	28	28	28	28	28
Inhaled nuclides	2400				200
Nuclides in the body	35	35	110	50	40
Total (rounded)	2500	90	170	110	300

[a] From NCRP (1987).

the United States, more than 100 million persons annually receive medical x-ray exposures, but fewer than 1 million persons receive radiation therapy.

2. Diagnostic Nuclear Medicine

Internally administered radionuclides are used medically for imaging studies of various body organs and for nonimaging studies such as thyroid uptake and blood volume measurements. Such uses present hazards for both patients and medical staff. Radiopharmaceuticals are also used for *in vitro* studies such as radioimmunoassay measurements and thus are of potential hazard to medical staff. Frequencies of procedures, while steadily increasing, vary widely from country to country. In industrialized countries, about 10 to 40 examinations involving radiopharmaceuticals are carried out annually per 1000 population. In developing countries, annual frequencies are on the order of 0.2 to 2 examinations per 1000 population.

3. Radiation Therapy

There are three broad categories of radiation therapy—teletherapy, brachytherapy, and therapy using administered radiation sources. *Teletherapy* involves external beams from sources such as sealed ^{60}Co sources, x-ray machines, and accelerators that generate electron, proton, neutron, or x-ray beams. *Brachytherapy* involves sources placed within body cavities (*intracavitary* means) or placed directly within tumor-bearing tissue (*interstitial* means). In the United States, Europe, and Japan, the frequencies for teletherapy and brachytherapy procedures exceed 2000 annually per million population.

Thyroid disorders, including cancer, for many years have been treated by ^{131}I, usually by oral administration. Introduced about 1980, in association with the development of techniques for producing monoclonal antibodies, were new cancer diagnosis and treatment methodologies called radioimmunoimaging and radioimmunotherapy. The therapy involves administration of massive doses of antibodies tagged with radionuclides and selected to bind with antigens on the surfaces of tumor cells. Imaging involves administration of very much smaller doses, with the goal of detecting the presence of tumor cells using standard camera and scanner imaging techniques. Imaging requires the use of radionuclides such as ^{99m}Tc which emit low energy gamma rays. Therapy involves the use of radionuclides emitting beta particles and electrons, with minimum emission of gamma rays, thus limiting radiation exposure, to the extent possible, to tumor cells alone. Among radionuclides used in radioimmunotherapy are ^{75}Se, ^{90}Y, ^{111}In, ^{125}I, ^{186}Re, and ^{191}Os.

B. Accelerator Sources

The earliest particle accelerators were the x-ray tubes of the late 19th century. Indeed, the radio and television (cathode-ray) tubes of the 20th century are low-voltage electron accelerators. As electrons beams are stopped, x rays are produced, inadvertently in the case of radio tubes, and deliberately in the case of x-ray generators.

Modern charged-particle accelerators date from the early 1930s, when Cockroft and Walton in England and Lawrence and Livingston in America developed particle accelerators for research purposes using beams of electrons or ions. Over the years, steady advances have been made in types of accelerators, in the energies of the particles accelerated, and in the magnitude of the current carried by the charged particle beams. Accelerators continue to serve at the frontiers of atomic and nuclear physics as well as the materials sciences. Moreover, accelerators play an ever more important role in diagnostic and therapeutic medicine and in industrial production processes such as radiography, analysis of materials, radiation processing, and radioisotope production.

Particle accelerators may be classified technologically as direct (potential drop) accelerators and indirect (radiofrequency, plasma) accelerators. Among the former are the Van de Graaff and Cockroft–Walton devices. Among the latter are linear accelerators, betatrons, cyclotrons, and synchrotrons. In the linear accelerator, the particles travel in straight lines, accelerated by the electric fields along their paths. In cyclic accelerators, magnets are used to direct particles into approximately circular paths, along which they may pass through the same accelerating electric fields many times along their paths. The ultimate energies reached by the accelerated particles has increased from about 10^6 eV in the accelerators of the 1930s to 10^{12} eV in modern research accelerators.

By their very nature and function, accelerators are intense radiation sources. In certain applications, accelerated beams of charged particles are extracted from accelerators and directed onto external receivers. Medical applications and radiation processing see this use of accelerators. In other applications, charged particle beams impinge on internal target receivers designed to act as desired sources of secondary radiations such as x rays or neutrons. In all cases, beams are stopped by targets within which secondary x rays, neutrons, and other particles such as mesons may be produced as undesirable but unavoidable byproduct radiations. Radiation shielding integral with the accelerator as well as structural radiation shielding surrounding the accelerator are necessary for personnel protection.

The production of secondary radiations arises mainly from three phenomena, direct nuclear reactions of ions

or electron with accelerator components, electromagnetic cascades, and hadronic cascades. Among the secondary radiations are neutrons, which in turn may be absorbed in accelerator and structural materials thereby leading to capture gamma rays and radioactive reaction products.

Representative of the direct nuclear reactions are those of relatively low-energy proton or deuteron beams in light-element targets. A popular method of generating energetic neutrons, for example, involves interactions of deuterons accelerated to 150 keV with tritium atoms in a target. The resulting reaction, $^{3}H(d,n)^{4}He$, produces an approximately isotropic and monoenergetic source of 14-MeV neutrons. Other such reactions include $^{3}H(p,n)^{3}He$, $^{2}H(d,n)^{3}He$, and $^{7}Li(p,n)^{7}Be$.

The electromagnetic cascade involves exchanges of the kinetic energy of an electron to electromagnetic energy of multiple photons in the bremsstrahlung process, followed by creation of the rest-mass and kinetic energies of an electron–positron pair in the pair-production process experienced by the photons. As the positrons and electrons lose kinetic energy radiatively, more photons are produced, and the cascade continues. The cascade is quenched when photons have insufficient energy to generate the rest masses of the electron–positron pair and when electron radiative energy losses fall below collisional energy losses.

In high-energy electron or proton accelerators, hadronic cascades may be produced when particles collide with atoms in the accelerator target or, inadvertently, with some other accelerator component, giving rise to many reaction products, including pions, kaons, protons, and neutrons. There is also exchange with the electromagnetic cascade via photodisintegration reactions and by production of energetic gamma rays upon decay of π^0 mesons. Propagation of the hadronic cascade occurs through reactions of the secondary protons and neutrons, and is especially important for nucleon energies of 150 MeV or greater. The cascade process produces most of the induced radioactivity at high-energy accelerators. Many reaction-product nuclei are in highly excited nuclear states and relax by emission of neutrons, whose subsequent absorption leads, in many cases, to radioactive byproducts.

Water, plastics, and oils in the radiation environs of high-energy accelerators yield ^{7}Be and ^{11}C. Aluminum yields these same radionuclides plus ^{18}F, ^{22}Na, and ^{24}Na. Steel, stainless steel, and copper yield all the aforementioned, plus a very wide range of radionuclides, especially those of V, Cr, Mn, Co, Fe, Ni, Cu, and Zn. Neutron absorption in structural concrete also leads to a wide range of radionuclides, among which ^{24}Na is a major concern. This nuclide has a half-life of 15 hr and, in each decay, emits high energy beta particles and gamma rays.

C. Industrial Isotope Sources

Radionuclides used in industry contribute very little to collective population doses, although individual occupational exposures may be significant. The largest sources are those used in radiography, typically comprising 10 to 100 curies of ^{192}Ir, ^{137}Cs, ^{170}Tm, or ^{60}Co. Borehole logging is accomplished using somewhat lower-activity gamma-ray sources and neutron sources such as mixtures of plutonium, americium, or californium with beryllium. Much lower-activity sources, often ^{90}Sr-^{90}Y beta-particle sources, are used for various instrumentation and gauging applications.

There are many consumer products containing radiation sources. While these sources are very weak and no one individual receives significant radiation exposure, many persons are involved. For example, the soil, water supplies, and building materials contain low concentrations of naturally occurring radionuclides. Electronic devices emit very low levels of x rays, and devices ranging from luminous timepieces to smoke detectors contain weak radiation sources. Even the use of tobacco exposes smokers to alpha particles from naturally occurring ^{210}Po in the tobacco leaf.

Various modern technologies have led to human radiation exposures in excess of those which would have occurred in the absence of the technologies. For example, the mining of coal and other minerals and their use is responsible for increased releases of naturally occurring radionuclides to the environment. World production of coal is about 4 billion tonnes annually. About 70% is used in generation of electricity, the balance mainly in domestic heating and cooking. Coal contains ^{40}K, and the decay chains ^{238}U, and ^{232}Th in widely varying concentrations. Depending on the nature of combustion, radionuclides are partitioned between fly ash and bottom ash. The smaller-sized fly ash particles are more heavily enriched with radionuclides, particularly ^{210}Pb and ^{210}Po. The average ash content of coal is about 10% by weight, but may be as high as 40%. Efficiency of ash removal in power plants is quite variable—from only 80% removal to as much as 99% removal, the average being about 97.5%. In domestic use of coal, as much as 50% of the total ash is released to the atmosphere. In terms of doses to individual tissues, the main impact of atmospheric releases during combustion is the dose to bone surface cells accruing from inhalation of ^{232}Th present in the downwind plumes of particulates from plants.

Annually some 1.4 billion tonnes of phosphate rock are mined and processed for use in production of fertilizers and phosphoric acid. Byproduct (phospho)gypsum finds wide use in the construction industry. The United States produces about 38% of the phosphate rock, Russia

19%, and Morocco 14%. Sedimentary phosphate rock contains high concentrations of radionuclides in the ^{238}U decay chain. Most airborne radioactivity releases are associated with dust produced in strip mining, grinding, and drying of the ore. Utilization of the phosphates leads to both internal and external radiation exposure, the greatest exposure resulting from use of byproduct gypsum in construction.

D. The Nuclear Power Industry

At the end of the 1990s, there were 428 nuclear power plants operating around the world, with a total electrical generating capacity of 345,000 megawatts. An additional 30 plants with 22,000 megawatts of generating capacity were under construction Most of the generating capacity consisted of pressurized-water and boiling-water reactors, which use ordinary water as coolant. Gas-cooled reactors, heavy-water reactors, light-water graphite reactors, and sodium cooled reactors provided the balance of the capacity.

1. Nuclear Power Reactors

The fission process and production of neutrons associated with reactor operation lead to a wide array of radioactive fission products and activation products arising from neutron absorption. Moreover, large quantities of uranium and plutonium are fissioned in modern nuclear power plants (typically 3 kg/d) to produce the thermal energy needed to produce electricity. Consequently, large quantities of fission products are produced and accumulate in the fuel. Also contained within the fuel are actinides produced by cumulative neutron absorption in uranium, thorium, and plutonium fuels. The actinides are characterized by spontaneous fission in competition with alpha-particle decay, and require sequestration to the same degree as the fission products.

One way of categorizing the generated radionuclides is by their physical–chemical behavior, namely, (1) noble gases, (2) ^{3}H and ^{14}C, (3) halogens, and (4) particulates. These divisions are based on the relative ease of isolation of the radionuclides from airborne effluents. The noble gases include the many isotopes of the krypton and xenon fission products as well as the activation product ^{41}Ar. These elements cannot be removed from a gas stream by filtration. Halogens include the many isotopes of the bromine and iodine fission products. If they are present in a gas stream, they are likely to be in a chemical form unsuitable for filtration, and effective removal requires adsorption on a material such as activated charcoal. Other radionuclides and the halogens in ionic form may be removed from a gas stream by filtration. In aqueous liquids, the particulates may be isolated by evaporation, filtration, or ion exchange. The halogens, unless in ionic form, cannot be isolated by evaporation or filtration, nor can noble gases. Special cases are ^{3}H in the form of tritiated water and ^{14}C as carbon dioxide. The tritium can be isolated only with very great difficulty, and CO_2 removal requires chemical treatment.

There are two sources of radionuclides in reactor coolant, leakage from defective fuel and activation products produced by neutron interactions in the coolant itself or with fuel and structure in contact with the coolant. Activation product sources are inevitable, and include a number of radionuclides which may be produced in the coolant. For example, ^{16}N is produced as a result of neutron interactions with oxygen, ^{41}Ar as a result of neutron absorption in naturally occurring argon in the atmosphere and ^{3}H as a result of neutron absorption in deuterium and, especially in pressurized-water reactors, by neutron-induced breakup of ^{10}B. Of course, in a sodium-cooled fast reactor, activation of natural sodium to short-lived ^{24}Na is an important consideration for in-plant radiation protection. Other activation products include isotopes of iron, cobalt, chromium, manganese, and other constituents of structural and special-purpose alloys. The radionuclides are leached into the coolant stream. They then may be adsorbed on surfaces or trapped as particulates in the boundaries of coolant streams within the plant, only later to be resuspended in the coolant. These sources can be minimized by carefully specifying the alloy and trace-element concentrations in plant components.

2. Fuel Mining and Fabrication

In the preparation of new fuel for nuclear reactors, the radiation sources encountered are natural sources associated with the uranium and thorium decay chains.

The principal release of radiation sources associated with uranium mining, underground or open pit, is release of natural ^{222}Rn to the atmosphere. Airborne particulates containing natural uranium daughter products also arise from open pit mining and from ore crushing and grinding in the milling process. Mill tailings can also become a long-term source of radiative contamination due to wind and water erosion, leaching, and radon release, the degree depending on the tailing-stabilization program followed. Mining and milling operations are generally conducted in remote areas and liquid releases containing dissolved uranium daughter products are of little impact on human populations.

The product of milling is U_3O_8 “yellow cake” ore concentrate. In this phase of the nuclear fuel cycle, the concentrate is purified and most often converted to UF_6 for enrichment in ^{235}U via gaseous diffusion or centrifuge

processes. Prior to fuel fabrication, the uranium is converted to the metallic or the ceramic UO_2 form suitable for use in fuel elements. Large quantities of uranium depleted in ^{235}U are byproducts of the enrichment process. Under current practice the depleted uranium is held in storage as being potentially valuable for use in breeder reactors. In this stage of the nuclear fuel cycle, there are relatively minor liquid and gaseous releases of uranium and daughter products to the environment.

3. Fuel Reprocessing

As nuclear fuel reaches the end of its useful life in power generation, there remain within the fuel recoverable quantities of uranium and plutonium which may be extracted for re-use in the fuel reprocessing stage of the nuclear fuel cycle. Whether or not the fuel is reprocessed is governed by economic and political considerations. Among the former are costs of reprocessing as compared to costs of mining, milling, conversion, and enrichment of new stocks of uranium. Among the latter are concerns over the potential diversion of plutonium to nuclear-weapons use.

In the reprocessing of oxide fuels, the spent fuel is first dissolved in nitric acid. Plutonium and uranium are extracted into a separate organic phase from which they are ultimately recovered and converted into the oxide form. The aqueous phase containing fission and activation products is then neutralized and stored in liquid form pending solidification and ultimate disposal. Because one reprocessing plant may serve scores of power plants, inventories of radionuclides in process may be very great and extraordinary design features and safety procedures are called for. Because of the time delays between removal of fuel from service and reprocessing, concerns are with only relatively long-lived radionuclides, notably ^{3}H, ^{14}C, ^{85}Kr, ^{90}Sr, ^{106}Ru, ^{129}I, ^{134}Cs, and ^{137}Cs.

During the dissolution step of reprocessing, all the ^{85}Kr, the bulk of the ^{14}C (as CO_2), and portions of the ^{3}H and ^{129}I appear in a gas phase. This gas is cleaned, dried, and released through a tall stack to the atmosphere. All the ^{85}Kr is thus released; however, the major part of the ^{3}H is removed in the drying process and the bulk of the ^{129}I and ^{14}C is removed by reaction with caustic soda. The ^{14}C may then be precipitated and held as solid waste. Depending on the degree of liquid-effluent cleanup, some of the ^{129}I and other fission products subsequently may be released to the environment.

4. Waste Storage and Disposal

Wastes generated in the nuclear fuel cycle fall into the broad categories of high-level wastes (HLW) and low-level wastes (LLW). The former, comprising unprocessed spent fuel or liquid residues from fuel reprocessing, accounts for only about 1 to 5% of the waste volume, but about 99% of the waste activity. The latter is comprised of in-reactor components, filter media, ion-exchange resins, contaminated clothing and tools, and laboratory wastes. For the most part, LLW consists of short-lived beta-particle and gamma-ray emitters. Wastes of low specific activity, but containing long-lived alpha-particle emitters, e.g., ^{239}Pu, require special handling more in the nature of that required for HLW.

In the United States, fuel elements from commercial reactors are presently not processed. By the year 2000, the cumulative spent fuel reached about 16,000 cubic meters, amounting to 40,000 tonnes of uranium and fission products. Most of this spent fuel will be stored at the plant sites where it is generated which are primarily in eastern states.

E. Nuclear Explosives

Large fractions of radioactive debris from atmospheric nuclear weapons tests are distributed globally, and the radionuclides remain in the biosphere indefinitely. The hazard is better characterized by the long-term dose commitment than by the dose rate at any instant and location. The fusion and fission energy released in a nuclear-weapon explosion is usually measured in units of megatons (Mt). One megaton refers to the release of 10^{15} calories of explosive energy—approximately the amount of energy released in the detonation of 10^{6} metric tons of TNT. The quantity of fission products produced in a nuclear explosion is proportional to the *weapon fission yield.* For a 1-Mt weapon fission yield, there must be the complete fissioning of about 56 kg of uranium or plutonium. The quantities of ^{3}H and ^{14}C, which are produced in the atmosphere by interactions of high-energy fission neutrons, are also proportional to the *weapon fusion yield.* There are several fusion reactions used thermonuclear devices, with a 1-Mt weapon fusion yield requiring, for example, the fusion of 7.4 kg of tritium with 4.9 kg of deuterium.

The disposition of weapon debris may be divided into three categories, local fallout, tropospheric fallout, and stratospheric fallout. Local fallout, comprising as much as 50% of the debris and consisting of large particles, is defined as that deposited within 100 miles of the detonation site. Depending on detonation altitude and weather conditions, a portion of the weapon's debris is injected into the stratosphere and a portion remains in the troposphere. These two atmospheric regions are separated by the tropopause (about 16-km altitude at the equator and 9 km at the poles). Temperature decreases with elevation in the troposphere. This hydrodynamically unstable condition leads to the development of convective weather patterns superimposed upon generally westerly winds. In the

stratosphere, temperature is more nearly constant or, in equatorial regions, even rises with elevation. Vertical convective motion is relatively slight and the tropical temperature inversion restricts transfer of material in the stratosphere from hemisphere to hemisphere.

Debris in the troposphere is distributed in longitude but remains within a band of about 30° latitude. The mean lifetime of radioactive debris in the troposphere is about 30 days and tropospheric fallout is important for radionuclides with half-lives of a few day to several months. Over the years, the bulk of the radioactive debris from weapons tests has been injected into the stratosphere in the northern hemisphere and at altitudes less than 20 km. Mechanisms for transfer of the debris to the troposphere and thence to fallout on the earth's surface are complex. At elevations less than 20 km, the half-life for transfer of aerosols between hemispheres is about 60 months, while the half-life for transfer to the troposphere is only about 10 months, with little material crossing the tropopause in equatorial regions. Consequently, the bulk of the fallout from any one test occurs over the hemisphere of injection and in temperate regions. In terms of the megatons of fission energy, in the period prior to 1980, 78% of the debris was injected into the stratosphere—70% into the northern hemisphere and 8 percent into the southern.

Eight radionuclides contribute significantly to the committed effective dose equivalent to the population. These are ^{137}Cs, ^{131}I, ^{14}C, ^{239}Pu, ^{90}Sr, ^{106}Ru, ^{144}Ce, and ^{3}H. Because of its long half-life, 5730 years, the commitment from ^{14}C extends over many human generations. The collective effective dose equivalent commitment into the indefinite future due to weapons tests to date is equivalent to about four extra years of exposure of the current world population to natural background radiation.

High-level radioactive wastes generated in the United States in the production of nuclear weapons have accumulated for decades. The wastes are stored at three sites: one in the state of Washington, one in Idaho, and one in South Carolina. The approximately 9000 tonnes of waste has a volume of 380,000 cubic meters and there are plans to dispose of this waste in a repository used also for disposal of spent fuel for nuclear power plants.

SEE ALSO THE FOLLOWING ARTICLES

COSMIC RADIATION • FISSION REACTOR PHYSICS • HEALTH PHYSICS • ISOTOPES, SEPARATION AND APPLICATIONS • NUCLEAR FUSION POWER • NUCLEAR POWER REACTORS • RADIATION, ATMOSPHERIC • RADIATION SHIELDING AND PROTECTION • RADIOACTIVITY

BIBLIOGRAPHY

Eisenbud, M. (1987). "Environmental Radioactivity," 3d ed., Academic Press, Orlando, FL.

Faw, R. E., and Shultis, J. K. (1999). "Radiological Assessment: Sources and Doses," American Nuclear Society, La Grange Park, IL.

Firestone, R. B., and Shirley, V. S. (eds.) (1996). "Table of Isotopes," 8th ed. Wiley-Interscience, New York.

Haffner, J. W. (1967). "Radiation and Shielding in Space," Academic Press, New York.

Jaeger, R. G. (ed.) (1968–1975). "Engineering Compendium on Radiation Shielding, Vol. I, Shielding Materials and Design; Vol. II, Shielding Materials and Designs, Vol. III, Shield Design and Engineering," Springer-Verlag, New York.

Kocher, D. C. (1981). "Radioactive Decay Tables," Report DOE/TIC-11026. National Technical Information Service, Springfield, VA.

NCRP (1977). "Radiation Protection Design Guidelines for 0.1–100 MeV Particle Accelerator Facilities," Report 51. National Council on Radiation Protection and Measurements, Washington, DC.

NCRP (1987). "Exposure of the Population in the United States and Canada from Natural Background Radiation," Report 94. National Council on Radiation Protection and Measurements, Washington, DC.

NCRP (1987). "Radiation Exposure of the U.S. Population from Consumer Products and Miscellaneous Sources," Report 95. National Council on Radiation Protection and Measurements, Washington, DC.

NCRP (2000). "Design Guidelines for Particle Accelerator Facilities," Draft Report of Scientific Committee 46-8, to be published in 2000 by the National Council on Radiation Protection and Measurements, Bethesda, MD.

Shultis, J. K., and Faw, R. E. (1996). "Radiation Shielding," Prentice-Hall, Upper Saddle River, NJ.

Slaback, L. A., Jr., Birky, B., and Schleien, B. (1997). "Handbook of Health Physics and Radiological Health," Lippincott, Williams & Wilkins, Philadelphia, PA.

UN (1972, 1977, 1988). "Report of the United Nations Scientific Committee on the Effects of Atomic Radiation," New York.

Weber, D. A., Eckerman, K. F., Dillman, L. T., and Ryman, J. C. (1989). "MIRD: Radionuclide Data and Decay Schemes," Society of Nuclear Medicine, New York.



Radioactive Wastes

Charles W. Forsberg
Oak Ridge National Laboratory

I. Principles of Waste Management
II. Sources of Radioactive Wastes
III. Storage and Transport
IV. Treatment and Packaging
V. Radioactive Waste Disposal
VI. Waste Analogs
VII. Other Considerations

GLOSSARY

Actinides Elements with atomic numbers 89 through 103 of the periodic table, all of whose isotopes are radioactive.
Disposal Permanent removal from the human environment.
Fission products Nuclei (usually radioactive) resulting from fission of heavier elements.
Half-life Length of time required for half of the radioactive atoms initially present to decay.
High-level waste (HLW) Highly radioactive waste, which contains both long-lived radionuclides and sufficient radionuclides to generate significant decay heat. Most high-level waste results from the reprocessing of spent nuclear fuel (or the spent fuel itself).
Intermediate-level wastes (ILW) Wastes that contain significant quantities of long-lived radionuclides (usually alpha-emitting actinides) but that do not generate significant decay heat.
Low-level waste (LLW) Wastes that contain significant quantities of only short-lived radionuclides, which decay to low levels within decades.
Radionuclide Isotope of an element that is radioactive.
Spent nuclear fuel (SNF) Nuclear reactor fuel that has been removed from a reactor following irradiation. If it is treated as a waste, it is a type of HLW.

RADIOACTIVE WASTES are generated from the operation of nuclear reactors and their associated fuel cycle, the use of radioactive isotopes in medical diagnosis and treatment, industrial and research applications, and the manufacture and testing of nuclear weapons. These wastes contain widely differing amounts and types of radioactive isotopes and thus present different degrees of concern for protection of human health and the environment. Radioactive waste management includes treatment, transport, storage, and disposal of the wastes, as well as environmental monitoring of radionuclide releases. The choice of disposal method is dependent upon the waste type. In general, wastes are isolated until the radionuclides

decay to nonradioactive isotopes. This period of time may vary from weeks to many thousands of years. Wastes with longer-lived radionuclides are disposed of in geological repositories that are located hundreds of meters underground.

I. PRINCIPLES OF WASTE MANAGEMENT

A. Objectives of Waste Management

Research, medicine, defense, and electric power utility operations generate radioactive wastes. The objective of sustainable radioactive waste management is to dispose of these waste while protecting humans and the environment. *Sustainable* refers to practices that, if continued forever, would not create hazards to future generations.

Mankind is in a transition from waste management practices that provide limited protection to the worker for limited times to sustainable waste management practices. In some countries, most waste management practices are sustainable. Other countries have mixtures of practices that provide protection to the humans and environment for varying lengths of time.

B. Types of Waste

There are three types of hazardous wastes: chemical, elemental, and radioactive. Many waste management practices and strategies are similar for all wastes. There are differences that reflect the different characteristics of these wastes.

1. *Chemical wastes*
   Chemical wastes, such as dioxins, have the characteristic that they can be made nonhazardous by chemical destruction using methods such as incineration. Biological wastes are a type of chemical wastes. Destruction is the sustainable approach to chemical waste management.
2. *Elemental wastes*
   Elemental wastes, such as the heavy metals (lead, arsenic, etc.), remain toxic forever. Mankind mines these elements and then often discards them into the biosphere. In the biosphere, they build up and can poison man. Elemental wastes can be disposed of by placing them in deep geological repositories (mines), where they will be isolated from humans and the environment. This is the reverse of the mining process.
3. *Radioactive wastes*
   Radioactive wastes contain radioactive isotopes that decay to nonradioactive isotopes over time. In the process of decay, theses wastes emit alpha, beta, neutron, or gamma radiation, which can destroy biological tissues. Proper disposal is to isolate radioactive wastes from humans and the environment until the radionuclides in the waste have decayed to safe levels.

Hazardous chemicals, elements, and radionuclides are everywhere in low concentrations. The earth and everything in it contain natural radionuclides and heavy metals. These hazardous components present a significant hazard only when the concentration is sufficiently high. For any waste, this necessitates a definition of what concentration of hazardous components makes the waste a hazardous waste.

There is no simple definition of the boundaries between hazardous and nonhazardous. Historically several approaches have been used to define this boundary. The first approach is an evaluation of the risks versus the benefits and setting the boundary based on this analysis. The second approach is to examine the concentration of hazardous materials in the earth's crust and define as *hazardous* any waste with a concentration of hazardous components some multiple of this number. The logic is that man evolved in the presence of low levels of hazardous materials and thus has developed biological mechanisms to withstand such concentrations of toxins.

The rate of radioactive decay is measured by the half-life of the radionuclide. In one half-life, the quantity of a particular radionuclide is halved. During each subsequent half-life, the quantity of a particular radioactive isotope decays by half. Different radionuclides have different half-lives; thus, different storage times are required for the radioactivity in different wastes to decay to safe levels. Half-lives vary from a fraction of a second to millions of years.

Table I shows the major radionuclides in spent nuclear fuel—the primary radioactive waste that is generated by a nuclear power reactor. The radioactivity is shown 1, 10, and 100 years after discharge from the reactor. Radioactivity is measured in becquerels (1 disintegration/sec) or in curies (3.7×10^{10} disintegrations/sec).

Several characteristics of radioactive decay are evident from this table. The total radioactivity decreases with time. Many radionuclides, such as tritium (^{3}H) and krypton (^{85}Kr), decay with their respective characteristic half-lives to stable isotopes. Some radionuclides decay to other radionuclides, which then decay to stable isotopes. An example of this is strontium-90 (^{90}Sr), which decays to yttrium-90 (^{90}Y), which, in turn, decays to stable zirconium-90 (^{90}Zr). While ^{90}Y has a short half-life ($T_{1/2} = 64$ hr), it is continuously created by the decay of the longer-lived ^{90}Sr ($T_{1/2} = 28.1$ years). Other radionuclides

TABLE I Inventory of Major Radionuclides in Spent Nuclear Fuel[a] Versus Time

		Radioactivity (curies/metric ton)			Decay heat (watts/metric ton)		
Isotope	**Half-life**	**1 year**	**10 years**	**100 years**	**1 year**	**10 years**	**100 years**
Fission products							
Gases							
^{3}H	12.3 years	763.3	460.6	2.95	0.03	0.02	[d]
^{85}Kr	10.76 years	12,450	6,958	20.66	18.65	10.42	0.03
^{129}I	1.7×10^{7} years	0.05	0.05	0.05	[c]	[c]	[c]
Other							
^{14}C	5,730 years	[b]	[b]	[b]	[d]	[d]	[d]
^{79}Se	65,000 years	0.61	0.61	0.61	[b]	[b]	[b]
^{90}Sr	28.1 years	103,300	83,370	9,787	119.9	96.76	11.36
^{90}Y	64 hr	103,300	83,370	9,787	572.6	462.2	54.26
^{93}Zr	1.5×10^{6} years	2.68	2.68	2.68	[c]	[b]	[b]
^{99}Tc	212,000 years	18.77	18.77	18.77	0.01	0.01	0.01
^{106}Ru	367 days	348,300	714.8	[d]	20.71	0.04	[d]
^{106}Rh	130 min	348,300	714.8	[d]	3,341	6.86	[d]
^{134}Cs	2.05 years	225,600	10,950	[d]	2,296	111.4	[d]
^{135}Cs	3.0×10^{6} years	0.67	0.67	0.67	[b]	[b]	[b]
^{137}Cs	30.0 years	150,900	122,600	15,320	167.0	135.6	16.95
^{137m}Ba	2.55 min	142,800	116,000	14,500	560.7	455.4	56.92
^{144}Ce	284 days	496,700	164.0	[d]	329.5	0.11	[d]
^{144}Pr	17.3 min	496,700	164.0	[d]	3,651	1.20	[d]
^{147}Pm	2.62 years	99,470	9,225	[c]	35.68	3.31	[d]
^{154}Eu	16 years	16,720	8,096	5.73	149.6	72.42	0.05
Subtotal		2,711,000	448,400	49,710	11,930	1,363	139.6
Actinides							
^{235}U	7.1×10^{8} years	0.01	0.01	0.01	[b]	[b]	[b]
^{236}U	2.4×10^{7} years	0.36	0.36	0.36	0.01	0.01	0.01
^{238}U	4.5×10^{9} years	0.31	0.31	0.31	[b]	[b]	[b]
^{237}Np	2.1×10^{6} years	0.66	0.66	0.80	0.02	0.02	0.02
^{238}Pu	86 years	7,094	6,682	3,291	235.1	221.5	109.1
^{239}Pu	24,400 years	429.5	429.4	428.5	13.24	13.23	13.20
^{240}Pu	6,580 years	737.8	743.5	751.7	22.97	23.15	23.41
^{241}Pu	13.2 years	156,300	101,300	1,332	4.85	3.14	0.04
^{242}Pu	379,000 years	2.73	2.73	2.73	0.08	0.08	0.08
^{241}Am	458 years	458.5	2,268	4,940	15.23	75.35	16.41
^{242m}Am	152 years	26.80	25.73	17.07	0.01	0.01	[b]
^{242}Am	160 hr	26.67	25.60	16.98	0.03	0.03	0.02
^{243}Am	7,950 years	41.70	41.66	41.31	1.34	1.34	1.33
^{242}Cm	163 days	15,480	21.19	14.04	570.4	0.78	0.52
^{243}Cm	32 years	49.04	39.40	4.41	1.80	1.45	0.16
^{244}Cm	17.6 years	8,049	5,703	182.00	281.5	199.5	6.37
Subtotal		188,700	117,400	11,070	1,147	539.8	318.6
Total		2,900,000	566,000	60,800	13,100	1,900	458.

[a] For a burnup of 50,000 Mwd/metric ton of uranium in a pressurized water reactor with an initial fuel enrichment of 4.2% ^{235}U. Excludes major short-lived radionuclides that decay to low levels within 1 or 2 years.

[b] Between 0.01 and 0.0001.

[c] Between 0.0001 and 10^{-8}.

[d] Less than 10^{-8}.

have more complex decay schemes. When a radionuclide decays, energy is released. Consequently, radioactive materials generate heat, with the heat generation rate also decreasing with time.

Some wastes are hazardous because they are a combination of chemical, elemental, and radioactive wastes. For example, uranium-238 (^{238}U) is radioactive and is a toxic heavy metal. Its hazard as a toxic heavy metal exceeds its radiotoxicity. This radionuclide has a 4.5-billion-year half-life; thus, its decay rate is very slow, and the radiation hazard is relatively low. Management of such wastes must account for all the hazards.

Radioactive wastes can be a result of radioactivity created by man or an inadvertent concentration of naturally radioactive materials. For example, some crude oil contains radium, a naturally occurring radioactive element. Phosphate ores often contain significant quantities of uranium. In both cases, the radioactive elements can be concentrated in process equipment to create a radioactive waste. Similarly, in the recovery of uranium from mined uranium ore, the ore tailings can present a radioactive hazard. To recover the uranium, chemical processes are used that convert some of the radionuclides in the ore from an insoluble form to a water-soluble form, which can potentially contaminate groundwater.

C. Man's Exposure to Hazardous Materials

A hazardous material can do damage only if it reaches man or the environment. There are four pathways to man. To protect man and the environment, waste management technologies are designed to block these pathways.

1. *Ingestion*
   The primary hazard from most hazardous wastes, including radioactive wastes, is that the hazardous material will enter water and be ingested as drinking water by man or ingested as food, which is grown using contaminated water. The hazard from ingestion of a radionuclide is dependent upon its radioactivity and its chemical characteristics. For example, ^{90}Sr is very hazardous if ingested because it behaves similarly to calcium in the human body. It concentrates in the bones and remains in the body for long periods of time. In contrast, plutonium is relatively nonhazardous because it encounters great difficulty crossing the human stomach lining into the blood stream and thus does not leave the digestive track.
2. *Inhalation*
   Inhalation is intake into the human body via the lungs as a gas, liquid, or aerosol. In most waste management systems, it is an occupational hazard for workers but not usually a major hazard for the public. Plutonium is an example of a radionuclide, which is very hazardous if inhaled.
3. *Absorption*
   Absorption is transfer of a material through the skin. It is a method of entry of some hazardous chemicals into the human body, but it is generally not a significant method of exposing man to radioactive wastes.
4. *Direct Radiation*
   Some radionuclides, such as cesium-137 (^{137}Cs), emit penetrating radiation, such as gamma rays or high-energy x-ray. Direct radiation can be stopped by use of radiation shielding. In most radioactive waste management systems, this is an occupational hazard for workers, but not a hazard for the public.

D. Radioactive Waste Management Principles

The basic principle of radioactive waste management is to isolate the wastes from the biosphere until they are nonhazardous. The method or methods of isolation depend upon the half-life of the radionuclides in the wastes and the pathways of the radionuclides to man.

Some radionuclides have very short half-lives. For example, iodine-131 (^{131}I), which is used for treating human thyroid disease, has a half-life of 8 days. Medical wastes containing ^{129}I are stored for several weeks to allow the radioactive isotope to decay to safe levels.

If there are longer-lived radionuclides, various methods are used to assure safe isolation. Liquids, which could leak from tanks into groundwater and be ingested by man, are converted to insoluble solids to block that pathway to man. Radioactive powders, which could be dispersed in the wind and inhaled, are converted to monolithic solids.

For shorter-lived radionuclides, the disposal site may be a shallow land trench or bunker. The trench or bunker is designed to keep groundwater away from the wastes until the radioactivity decays to very low levels. Longer-lived wastes are buried deep underground ($>$200 m), where the rock isolates the wastes from man and the environment. With long-lived radionuclides, surface storage facilities can not be used for permanent isolation because there is no assurance that man will maintain them for long periods of time.

E. Radioactive Waste Categories

Radioactive wastes are categorized by their properties, which determine how they should be disposed of. There are three primary categories

1. *Low-Level Wastes (LLWs)*
   The radionuclides in LLWs have relatively short half-lives. The half-life is sufficiently short such that

institutional control of the disposal facility can be assumed as long as the materials remain highly hazardous. Most LLWs consist of protective clothing, broken equipment, facility decommissioning wastes, and similar wastes. The volumes are large, but the radioactivity is small. While most LLWs have low levels of radioactivity, some LLWs are extremely radioactive and hazardous. For historical reasons, the term *low-level* is used; however, *short-duration* or some other term would better describe these wastes.

2. *Intermediate-Level Wastes (ILWs)*
   These radioactive wastes have long half-lives, but the concentrations of radionuclides in the wastes are sufficiently low such that the heat generation rates are low. Typical ILWs contain radionuclides, such as plutonium-239 (^{239}Pu), which has a 24,000-year half-life. With the long half-lives, it is unreasonable to assume that man can maintain the disposal facility until the materials are nonhazardous. Disposal methods must ultimately operate safely without actions by mankind.
3. *High-Level Wastes (HLWs)*
   These wastes contain (1) radionuclides with long half-lives and (2) concentrations of longer-lived radionuclides sufficient to generate significant decay heat. The decay heat necessitates designing disposal facilities to dissipate decay heat for hundreds to many thousands of years. Two groups of radionuclides are responsible for most of the decay heat: (1) the fission products ^{90}Sr, ^{137}Cs, and their decay products and (2) the actinides plutonium, americium, and curium. The high-heat-generating fission products have half-lives of ~30 years. Some of the actinides have half-lives of many thousands of years.

Different countries use different names for these waste categories and have somewhat different category definitions. Many of the names and waste categories are consequences of historical events. ILW is a waste category in Europe. In the United States, the term ILW is not used. Instead, wastes with the characteristics of ILW are broken into two categories of wastes (>C and transuranic)—both that require the disposal methods for ILW that were discussed earlier. The United States defines four classes of LLWs (A, B, C, and >C) with A being the least hazardous and >C the most hazardous. While >C waste is called LLW, it is, in fact, an ILW, for which the regulations require that it be managed as an ILW. Furthermore, the United States defines the term mixed wastes. This refers to wastes that contain both radioactive and chemical or elemental hazardous components.

II. SOURCES OF RADIOACTIVE WASTES

A. Wastes from the Nuclear Fuel Cycle

The largest quantities of radioactive wastes are generated by operation of the nuclear fuel cycle either to generate electric power or to produce materials for nuclear weapons. With the end of the cold war, the production of nuclear materials for weapons has decreased, but there is a large legacy of radioactive wastes, which have not yet been treated and disposed of. The nuclear fuel cycle includes all processes that are required between the mining of uranium and the final disposal of waste products. As shown in Fig. 1, these processes are:

1. Uranium mining and milling
2. Uranium purification and conversion to appropriate chemical forms
3. Enrichment of uranium-235 (^{235}U)
4. Fuel fabrication
5. Reactor operations
6. SNF reprocessing and
7. Waste storage and disposal.

The details of each process depend on the type of reactor used, the characteristics of the fuel used, and whether or not the SNF is reprocessed

A typical nuclear power reactor with a 1000-MW(e) capacity requires about 150 tons of uranium per year. Since the concentration of uranium typically in ore is quite small (about 0.2 wt%), almost 75,000 tons of ore must be mined and processed to obtain this amount of uranium. The uranium ore also contains the radioactive decay

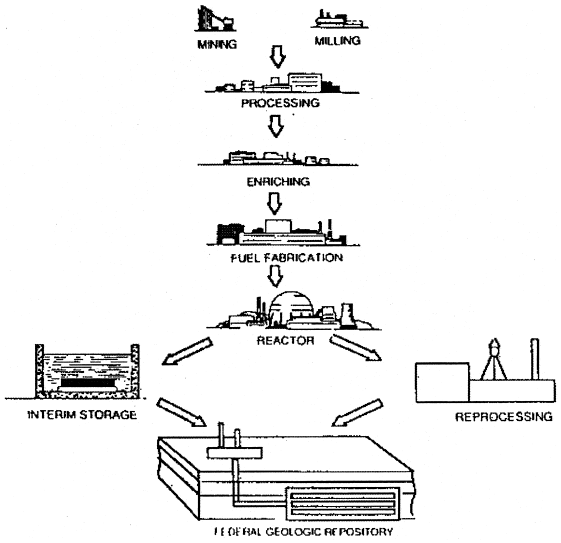

FIGURE 1 Nuclear fuel cycle (existing encyclopedia figure).

products of uranium: radium, radon, etc. The principal radioactive hazards associated with uranium mining are inhalation of radon and contamination of groundwater with radium. Radon gas, a decay product in the uranium decay chain, is released from exposed uranium-bearing minerals or from radon entrained in groundwater. The radon decay products (radioactive isotopes of polonium, bismuth, and lead) can deposit in lung tissue of animals or humans. Mine-drainage water may contain low levels of radioactive contamination that require cleaning before release.

Extraction of uranium from ore leaves millions of tons of tailings containing small amounts of radioactive elements, such as thorium and radium. Generally, wet tailings from chemical extraction are collected in piles and are allowed to dry. Even though the radiation hazard in the surrounding region is small, it is necessary to prevent tailings from getting into the air as dust or from contaminating groundwater. This is usually accomplished by lining the tailings pit and walls with a thick layer of clay to prevent water flow through the tailings and covering the tailings with a protective layer of earth to prevent radon gas from escaping the tailings. The radon gas—the primary hazard—is continuously generated from other uranium decay products but has a half-life of only a few days. With a protective layer of earth over the tailings, the radon gas decays away before it can diffuse through the layer of earth.

The radon hazard associated with uranium mining is the same hazard from radon as occurs in basements of some homes and other buildings. Uranium is a ubiquitous naturally occurring element. In some localities, the concentrations are sufficient such that the radon decay product of uranium creates a health hazard. With uranium mines, the uranium concentrations are much higher than those in typical soils so the radon production is much higher.

The next three steps of the nuclear fuel cycle convert the yellow cake product (U_3O_8 concentrate) from the uranium milling into uranium fuels to be used in nuclear reactors. These steps include converting the yellow cake to uranium oxide or fluoride, enriching the uranium in the ^{235}U isotope for those reactors that require enriched uranium, and fabricating nuclear fuel. Small quantities of LLW are produced by these processes.

In addition, significant quantities of uranium depleted in the isotope ^{235}U are produced. The uranium enrichment facilities separate natural uranium ($\sim$0.7% ^{235}U and 99.3% ^{238}U) into an enriched uranium fraction (3 to 5% ^{235}U) for use in power reactors and depleted uranium, which is primarily ^{238}U. About a million tons of depleted uranium are in storage. Some nations are storing this material for possible use in breeder reactors. Other nations are considering whether or not it is a radioactive waste. As a waste, the depleted uranium would be a radioactive and toxic elemental waste.

Operation of nuclear reactors produces LLWs in the forms of gases, liquids, and solids. The radioactive material arises from two nuclear processes: neutron activation and fission. Neutron activation target nuclei can be materials of construction of the nuclear reactor core and vessel, corrosion products in the cooling system or other impurities in the cooling water. An example of a radioactive activation product is the formation of cobalt-60 (^{60}Co) from activation of stable cobalt-59 (^{59}Co) in stainless steel. Fission is the process that produces the energy in the reactor. Neutron absorption by fissionable isotopes results in fission and the resultant production of multiple fission products, which may be radioactive. Fission products may slowly leak from fuel tubes through pinholes formed by corrosion of the fuel tubes. Some leakage into the cooling water is unavoidable. Radioactive impurities are removed from the cooling water by passing the water through an ion-exchange resin bed or using another process. Activation products and fission products eventually end up as wastes that must be disposed of.

Most of the wastes are LLWs. These include ion-exchange resins; detergents from laundry operations and decontamination of equipment; and compacted trash, such as paper, rags, plastic and clothing. Very small quantities of ILWs are also produced. These are typically reactor internals that have been irradiated for long periods of time.

Reactor fuel assemblies remain in the reactor for 3 to 5 years. After this time, the highly radioactive spent nuclear fuel (SNF) can be either reprocessed to recover the remaining fissile materials (^{235}U and plutonium) to manufacture new fuel or be disposed of directly as waste. Greater than 99.99% of the radioactivity in a reactor is in the SNF. Reprocessing is a chemical process, which separates useful fissile materials from the radioactive fission products. The concentrated radioactive waste is HLW, which is typically converted into HLW glass as a final storage and disposal form.

The United States, Sweden, Canada, and a number of other countries plan to directly dispose of SNF as waste. For them, it is a type of HLW. France, Great Britain, Japan, and several other countries reprocess SNF in order to recover the fissile material (uranium and plutonium) for recycle into new fuel. The recycle of these fissile materials into new fuel assemblies can provide up to a third of the fuel for the nuclear reactor and can thus reduce the demand for natural uranium. The decision to use a once-through fuel cycle or reprocess depends upon economics (the price of uranium and the cost of reprocessing) and national decisions on energy security.

Table I gives the estimated radionuclide inventory for one ton of SNF from a pressurized water reactor (PWR). Before reprocessing, the SNF is typically stored for 3 to 5 years to allow most of the shorter-lived fission products to decay to lower levels. HLW, which is derived from reprocessing operations, contains the same radionuclides as SNF, except for the removal of >99.5% of the uranium and plutonium. Reprocessing generates several secondary wastes, such as fuel assembly cladding, which is an ILW.

B. Medical, Research, and Miscellaneous Wastes

LLWs are generated from the use of radioactive isotopes in medical diagnoses and treatment, agricultural research, and industrial applications. Each of these applications results in a certain amount of radioactive waste arising from (1) production of the isotopes, (2) radioactive isotopes that are left over from an experiment or medical test, or (3) the end of the useful life of devices containing radioactive isotopes. The hazards associated with these wastes depend upon the amounts of radioactive materials, half-lives of the isotopes present, and the energy and type of the radiation.

The heat produced by the decay of radioactive materials can be used for thermoelectric generators, which can produce steady, reliable electric power for remote locations. Electric generators powered by plutonium-238 (^{238}Pu) are used in deep-space missions, including exploration of the planets. Wastes from production of such devices are ILWs.

Nuclear accelerators are used for biological, materials, and physics research. High-energy accelerators cause nuclear reactions and thus create radioactive materials that ultimately become wastes. Depending upon the type of accelerator, the waste can be LLW, ILW, or HLW. Accelerators, certain fusion energy devices, and nuclear reactors are the three types of devices, which create radioactive isotopes, which ultimately become wastes.

C. Defense Wastes

Defense activities generate similar types of radioactive wastes. Nuclear powered submarines and surface naval vessels generate SNF. The production of weapons-grade plutonium in special production reactors generates HLW as a byproduct of reprocessing operations. The manufacture of weapons containing plutonium generates plutonium-contaminated ILWs.

The end of the cold war has significantly reduced the worldwide rate of radioactive waste generation from defense operations. However, some countries, such as the United States and Russia, have large quantities of defense legacy wastes, which must ultimately be treated and disposed of (see section regarding *Legacy Wastes* later). It will require many decades to treat and properly dispose of these legacy wastes.

D. Waste Quantities and Radioactivity

Table II shows the annual and cumulative quantities radioactive wastes by category, which are generated in the United States. One important characteristic is that the quantity of radioactivity generated each year is high, but the cumulative quantity only slowly increases with time because of the rapid decay of short-lived radionuclides.

III. STORAGE AND TRANSPORT

A. Transportation

Radioactive wastes are transported by public and private carriers to various destinations for storage, processing, and disposal. The transport requirements for radioactive materials depend upon the specific radionuclides, the quantities, and the forms (solid, powder, etc.). The packages transporting these materials are designed to prevent significant release of radionuclides and to limit radiation exposures. The requirements to ship small quantities of encapsulated radioactive materials (e.g., home smoke detectors) are much less than the requirements to ship highly radioactive SNF.

There are seven classes of transport packaging including (1) excepted packages, (2) three classes of industrial packaging, and (3) Type A, B, and C packages. Highly hazardous radioactive materials are shipped in Type B and C packages. These packages are specially designed to withstand extreme transport accidents (collision, fire, immersions in water). SNF and other highly radioactive materials, which are transported by truck, rail, barge, or ship, use Type B packages. Type C packages, which are used for transport of certain radioactive materials by air, are designed to withstand aircraft crashes. Extensive development and large-scale testing is required before these types of packages are licenced for use.

B. Storage

Radioactive wastes are stored to (1) allow some radioactive wastes to decay to nonradioactive wastes, (2) reduce transport risks; (3) provide lag storage between waste generator, treatment, and disposal sites; (4) simplify disposal; and (5) manage radioactive wastes until disposal facilities become available.

TABLE II 1994 Inventory of Radioactive Wastes in the United States

Type	Quantity		Radioactivity	
	Annual	Cumulative	Annual (10^6 Ci/y)	Cumulative (10^6 Ci/y)
SNF				
Government[a]	NA	NA	NA	NA
Commercial	1,882 t/y[b]	29,811 t	11,000	26,700
HLW[c]				
Government	Small	376,000 m^3	Small	934
Commercial	0	240 m^3	0	24.7
ILW				
Government	[d]	215,000 m^3	[d]	2.59
Commercial	Small	Small	Small	Small
LLW				
Government	52,200 m^3/years	2,960,000 m^3	0.62	12.9
Commercial	24,300 m^3/years	1,520,000 m^3	0.75	5.84

[a] Not available. Government activities are primarily associated with defense. SNF includes SNF from navy reactors.

[b] SNF is measured by the number of metric tons of uranium in the fresh fuel. In a typical fuel assembly, the uranium is 50 to 75% of the total mass of the fuel assembly. The fission products and actinides are in the uranium.

[c] With the end of the cold war, the United States is no longer generating significant quantities of HLW. Since 1994, the small amount of commercial wastes has been converted to ~240 m^3 of HLW glass (shown in the table). In 1996, the first HLW glass plant began operations to solidify the government HLW from defense operations. Vitrification is expected to reduce volumes by an order of magnitude.

[d] Large quantities of new defense ILW are being generated by treating and repackaging existing ILW for disposal with smaller quantities from existing operations.

For radioactive wastes containing only radionuclides with half-lives measured in days or weeks, such as some medical and research isotopes, storage for weeks or months eliminates the radioactivity and converts the radioactive waste into a nonradioactive waste. The general rule-of-thumb is that a waste stored for 10 times the half-life of the primary radionuclide is no longer a radioactive waste. Such storage reduces the radioactivity by about a factor of 1000. For other radioactive materials, a period of storage reduces the radioactivity and heat generation and, in turn, reduces transport and disposal site costs and risks.

One of the most radioactive wastes is SNF from power reactors. It is universal practice to store SNF for some period of time before transport and disposal to allow the radioactivity and decay heat to decrease (Table I). This storage reduces transport and disposal costs and risks. SNF is so radioactive and generates so much heat immediately after discharge that, in most cases, it is stored under water in pools at the reactor site. The water provides radiation shielding to protect the workers from gamma radiation and cools the SNF. Typically, the minimum storage times are 2 to 5 years.

After some period of time, the SNF is transferred to dry storage systems. These are typically (1) air-cooled, shielded concrete vaults or (2) above-ground concrete or steel casks. A typical concrete storage cask is shown in Fig. 2. The SNF is placed in a stainless steel canister, which is then filled with helium, and welded shut. Typical SNF assemblies are ~4 m long with a square cross section that is typically 10 to 25 cm on a side. Consequently, the canister contains an egg-crate type structure to hold the multiple SNF assemblies vertically within the canister. The canister is then placed in a steel-lined, concrete cask, which provides radiation shielding and physical protection of the SNF against severe events (tornados, accidents, etc.). There can be significant decay heat; thus, air vents allow ambient air to flow into the annular zone between the canister and cask, to flow up the annular zone, and to exit near the top of the cask. A loaded, concrete cask may contain ~10 tons of SNF with a decay heat of ~20 kW, is ~6 m high, has a diameter of ~3.4 m, has a concrete-wall thickness of ~0.8 m, and weighs ~170 tons.

The stainless-steel canister can be designed as multipurpose canister (MPC). This allows the SNF to be shipped and possibly disposed of using the same canister by placing the canister in a transport or disposal cask. There are additional requirements for an MPC. For example, if it is to be used with a transport cask, the inner MPC must meet certain added requirements to help assure package integrity in the event of a major transport accident.

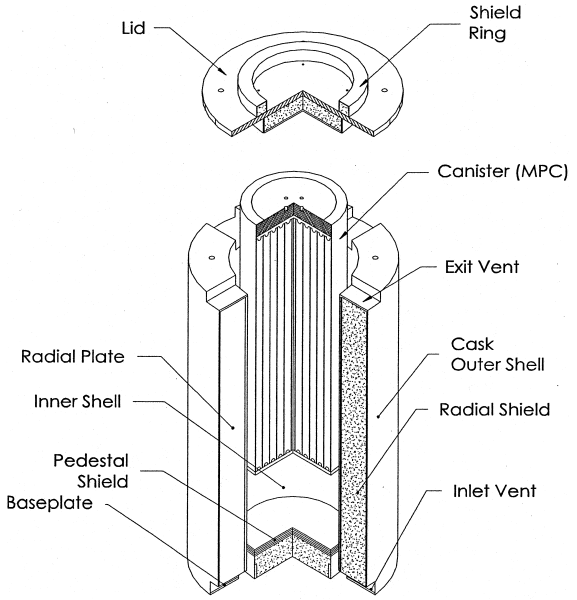

FIGURE 2 HI-STORM® dry storage cask system for spent nuclear fuel (courtesy of Holtec International; U.S. Patents 5,898,747 and 6,064,710).

If the SNF is reprocessed, the resultant HLW will contain the same radionuclides that were in the SNF, except for gaseous radionuclides, uranium, and plutonium. After solidification of the fission products from reprocessing, most countries plan to store the resultant HLW glass for several decades to allow the radioactivity to decrease before further transport and disposal of the wastes. Solidified HLW is stored in facilities similar to those used for SNF.

IV. TREATMENT AND PACKAGING

The function of treatment and packaging is to convert raw wastes into forms that are acceptable for long-term storage, transport, and disposal. For example, the performance of a disposal site depends upon the site, the facility containing the radioactive waste, and the waste form. Each disposal site for each type of waste defines waste acceptance criteria (WACs), which state the allowable radioactive chemical and physical forms that the disposal site will accept as wastes. Other WAC are defined for storage and transport. Treatment and packaging operations are the conversion processes to meet WACs.

There are common disposal requirements for all radioactive wastes: (1) solidification of liquids and conversion of dispersible solids (powders) to monolithic solids, (2) conversion of reactive chemicals into nonreactive chemicals, and (3) packaging, which minimizes handling risks. Generally, the more hazardous radioactive wastes must be converted into better-quality waste forms than less hazardous radioactive wastes and thus require more treatment before they can be placed in long-term storage, transported, or disposed of.

A. LLW Treatment

Most of these wastes require limited processing to meet transport and disposal requirements; however, there are large volumes of LLWs. Consequently, the primary incentive for treatment is to reduce the volume and thus reduce the cost. When feasible, LLWs are segregated into radioactive and nonradioactive wastes and separately disposed of. Many LLW streams contain equipment that has only a surface layer of radioactive contamination. Washing and other methods separate the radioactive components from the larger-volume trash.

Volumes are reduced by (1) evaporation of liquids or removal of the radioactive components in the liquid by ion exchange or other processes, (2) incineration, (3) melting and casting, (4) supercompaction, and (5) other industrial processes.

The wastes are packaged. One almost universal requirement is that the package be able to support significant external weight. In disposal facilities, packages are stacked on top of each other. Consequently, the bottom packages must support the weight of the packages above them to prevent collapse. This requirement encourages the use of encapsulating wastes in cement or supercompacting the wastes so that the wastes support the package against collapse.

It is usually required that the more radioactive types of LLW be treated to reduce the long-term radionuclide release rate from the package. This is done by (1) solidifying the waste in cement or other insoluble matrixes and/or (2) packaging the waste in long-lived containers.

B. ILW Treatment

The requirements for ILW usually include those for LLW and some additional requirements depending on the waste form. Since these wastes will be placed in underground facilities, there is usually a requirement to minimize gas generation from radiolysis. There may be other requirements depending upon the disposal site.

C. HLW Treatment

HLW is primarily derived from processing SNF. It contains most of the radioactivity that was in the SNF and is the most hazardous radioactive waste generated in large quantities. The radionuclide composition is that of SNF

(Table I) minus most of the uranium, plutonium, and gases. With current processing systems, the waste is initially a nitric acid solution.

For long-term storage and disposal, the HLW liquid must be converted into an insoluble, nondispersible solid, which can withstand high temperatures and high radiation levels. The high concentrations of radionuclides generate sufficient heat such that the center of a solid HLW form may be a 100°C or higher than the outside edge. The final waste form must incorporate the many different elements, which are found in HLW.

The standard industrial process for HLW solidification is conversion of the HLW aqueous nitrate solution into borosilicate or phosphate glass. These glasses can accept a wide variety of HLW chemical compositions. There are several glass-making processes. In the most common process (Fig. 3), (1) the HLW liquid solution is fed into a rotary calciner, where the high temperature evaporates the water and decomposes the waste nitrates to oxides, (2) the radioactive oxides and glass frit are fed to an induction heated glass melter, (3) the mixture is melted to form a molten glass, and (4) the molten glass is poured into stainless steel canisters. The canisters are cooled, and the molten glass solidifies. The glass processes typically operate at 1100 to 1150°C. The process generates various gases and radioactive aerosols, which usually include cesium. Consequently, these processes include multistage off-gas cleanup systems that capture and recycle the radionuclides back to the glass-making process.

The final composition of the HLW glass may contain up to 28 wt% waste oxides in glass. Table III shows the reference borosilicate HLW glass composition for the vitrification facilities at LaHague—the large French reprocessing facility near Cherbourg, France. These are the largest vitrification facilities in the world and solidify the HLW from processing ~1600 tons of power reactor SNF per year. As of the year 2000, these vitrification facilities have solidified ~3 billion Ci of HLW in about ~3000 tons of HLW glass. This has resulted in the production of ~7100 glass logs. Each HLW glass container is 1.335 m high and 43 cm in diameter. Each HLW glass log may initially generate up to 4 kW of heat.

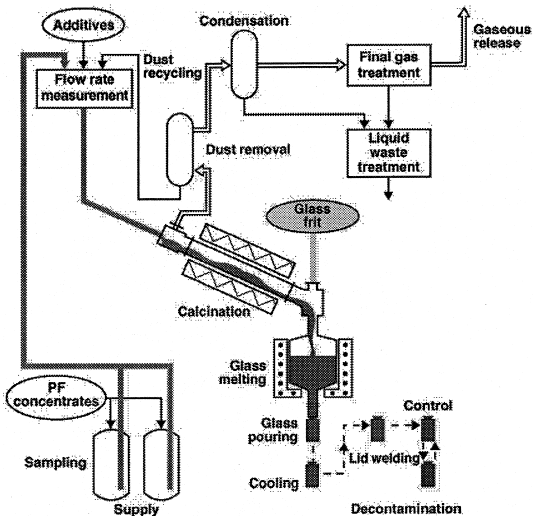

FIGURE 3 French process for conversion of liquid HLW into borosilicate HLW glass (courtesy of Cogema Inc.).

TABLE III Typical Composition of French HLW Borosilicate Glass

Component	Weight percentage
SiO_2	45.1
B_2O_3	13.9
Al_2O_3	4.9
Na_2O	9.8
CaO	4.0
Fe_2O_3	2.9
NiO	0.4
Cr_2O_3	0.5
P_2O_5	0.3
Li_2O	2.0
ZnO	2.5
Fission products and actinide oxides	13.7

Most facilities make borosilicate HLW glass but a few facilities make phosphate HLW glass. The borosilicate glasses are similar to Pyrex^R, the glass typically used to make laboratory glassware and glass cookware for the home.

In commercial operations, HLW liquids are solidified shortly after they are generated. Once radionuclides are incorporated into an insoluble, monolithic solid, the risks of release to the environment are low. In most countries it is planned to store HLW glasses for several decades before disposal to allow further decay of the radioactivity. The same types of storage facilities are used for HLW as for SNF.

Significant research is currently underway on using ceramic forms for HLWs. The advantage of ceramics is that they may be more chemically stable in the environment of an underground nuclear waste repository than glass waste forms.

V. RADIOACTIVE WASTE DISPOSAL

A. LLW Disposal

In the United States, there are three classes of LLW (A, B, and C). Class C is the most hazardous LLW. Unlimited

quantities of radionuclides with half-lives less than 5 years can be disposed of as LLW because they will decay away within decades. Safe disposal requires that the disposal site not be disturbed while the radionuclides are decaying. It is required that institutional control will be maintained for at least 100 years—the time required for Class A and Class B wastes to decay to safe levels. The disposal of Class C wastes requires barriers (greater disposal depth, intrusion barriers) to minimize the potential for human intrusion for 500 years. Class C wastes must decay to safe levels by this time.

The requirements on the waste form and the facility depend upon the class of LLW. The more hazardous LLWs require better waste forms and disposal facilities with multiple barriers to prevent the release of radionuclides. In the United States and several other countries, LLW is disposed of in special trenches or engineered bunkers. The trenches and bunkers are designed to keep water out and thus prevent transport of radionuclides from the waste to groundwater.

For high activity LLW, the disposal trench includes multiple features to isolate the radioactivity until it decays to low levels. Typically the wastes are stacked in the trench. Sand, grout or other fill materials are used to fill void spaces between packages and prevent subsidence of the waste. If the waste subsides, it might destroy the protective layers above the waste and would create a depression in which water can collect and infiltrate into the disposal site. Immediately above the waste is a clay layer and sometimes a synthetic membrane layer, which prevents water from reaching the waste. Above these layers, a layer of gravel or similar material is placed to allow rapid flow of water away from the trench. This layer minimizes the potential for water penetrating the clay layer and entering the trench. It also creates a dry zone, which discourages plant roots from penetrating the trench cap and disrupting the lower layers. The top layer consists of large rocks or other mechanical barriers to prevent disturbance of the trench by wind erosion, water erosion, animal intrusion (burrowing animals), and human intrusion.

Some countries use other types of engineered systems for LLW. For example, Sweden and Finland dispose of moderately radioactive wastes in large silos. Waste definitions vary by country; thus, the waste categories are not exactly comparable. The Swedish SFR (Slutforvar for reaktoravfall) facility is located under the Baltic Sea in a series of caverns and silos, which were excavated from the granite bedrock. The caverns and silos are connected to land by large, underground tunnels. The caverns are used for very-low-activity wastes, and the silos are used for moderately radioactive wastes. Each concrete silo (Fig. 4) is about 25 m in diameter and 50 m high. The wastes are placed in the silo and cemented in place.

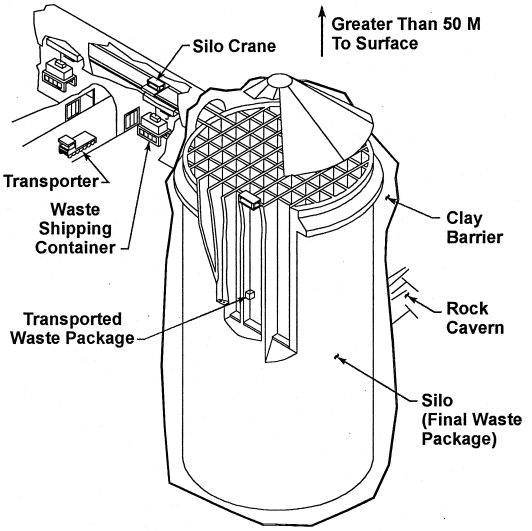

FIGURE 4 Swedish SFR silo for high-activity wastes (courtesy of the Swedish Nuclear Fuel and Waste Management Company).

This facility also uses a multibarrier approach to prevent the migration of radionuclides from the wastes to the open environment. The inner barriers are the waste form and package. In the silo the packages are cemented in place to create a monolithic silo to slow water migration and prevent any long-term collapse. A thick, clay layer is placed between the silo and the rock walls to further prevent water migration from the rock to the silo and thus to the waste. The location of the mined space under the seabed offers several benefits. It minimizes the potential of future human intrusion. Because the water in the rock is salt water, the site avoids any possibility of future generations drilling water wells into the facility and then consuming contaminated water. Last, groundwater flow with potential migration of radionuclides from the waste is minimized. Groundwater flows from high elevations to low elevations. Under the ocean seabed there is minimal groundwater flow because there is no place to which the water can flow.

Several European countries (Great Britain, Germany, Switzerland) are planning to dispose of LLW with ILW in geological disposal facilities. This reflects several considerations: (1) high population densities, which place a high premium on land, (2) political difficulties in defining times for institutional control of land, and (3) local economics. For countries with limited quantities of wastes, the incremental cost of disposal of LLW in an ILW disposal facility may be less than the cost of building multiple disposal facilities. However, at the present time there are no operating geological repositories for radioactive wastes in Europe.

B. ILW Disposal

ILWs contain concentrations of long-lived radionuclides, which remain hazardous for thousands of years. The United States has defined two categories of ILWs: >C and transuranic. In practice, if the waste contains more than 100 nCi/g of long-lived radionuclides, it is generally considered an ILW or HLW. History shows that man-made structures do not remain intact for such time periods. Man's activities (accidental human intrusion and deliberate human intrusion for valuables or curiosity), storms, earthquakes, erosion, and other natural phenomena continually alter the surface of the earth and thus potentially disperse anything disposed of in a surface structure or trench.

The favored method for disposal of ILW is placing the waste containers in mined cavities deep in the earth's crust. There are several advantages of deep disposal. The hazardous waste is removed from all human access. While the surface of the earth is constantly changing, conditions deep underground are unlikely to change during the time when the waste is significantly radioactive. Many rock formations have remained stable for tens of millions to billions of years.

The geologic medium that contains the waste should, ideally, have the following characteristics:

1. Be geologically stable (away from earthquake zones, faults, and potential volcanoes)
2. Have no potentially valuable resources (mined out or no resources) that might lead to intentional or accidental human intrusion
3. Have low water flow
4. Have stable, mined openings

There are many possible geologies with these characteristics, including salt deposits, granite, shale, clay, and tuff (compacted, welded, volcanic ash). A geologic repository will have characteristics of a large, underground mine. Surface facilities are required to handle and process the waste before it is handled and emplaced underground.

After the repository is closed and sealed, isolation of the waste from the environment will be accomplished by a system of multiple barriers, both natural and engineered. The primary objective of these barriers is to delay (1) the dissolution of radionuclides in groundwater or the formation of radioactive colloids, which can be transported by groundwater and (2) subsequent transport by groundwater of the radionuclides to the biological environment. Groundwater transport is the primary failure mode of a repository.

The natural barriers are the surrounding rock formations and their geological, hydrological, and geochemical characteristics, which limit radionuclide transport from the repository. Many radionuclides are absorbed on rock; thus, the transport of most radionuclides in groundwater is far slower than the movement of the groundwater. The engineered barriers may be the waste form, the waste package, the fill material around the waste package, other engineered barriers, and the underground facility. The underground facility consists of underground openings, seals, and backfill materials, which are used to further limit groundwater circulation and to impede the transport of radionuclides to the environment.

Geological repositories are used for chemical, elemental, and radioactive wastes. Over 12 million tons of chemical and elemental wastes have been disposed of in geological disposal facilities in Europe. The first operational repository in the world was Herfa-Neurode, which opened in 1972 in Germany. Herfa-Neurode is in an old, operating, potash salt mine where the mined-out space is being used for waste disposal. The facility is at a depth of ~700 m. The salt is covered by layers of impermeable clay and shale and has remained almost unchanged for 250 million years. This operating repository accepts chemical and elemental wastes, but it does not accept radioactive wastes. It has disposed of ~1.5 million tons of such wastes and can accept up to 200,000 tons of waste per year. This throughput far exceeds that of any existing or planned radioactive waste disposal facility. Most of the wastes are received in drums on pallets. There are several other elemental and chemical geological repositories in Europe although no such repositories currently exist in the United States.

Significant quantities of LLW and ILW have been disposed of in salt in two German repositories: Morsleben and Asse. Because of political factors, no radioactive geological disposal facilities are currently operating in Europe.

In 1999, the United States opened the Waste Isolation Pilot Plant (WIPP), which is near Carlsbad, New Mexico. The repository is constructed in bedded salt about 650 m underground. This ILW repository accepts only defense-generated transuranic wastes, which are ILWs containing transuranic elements (e.g., plutonium, americium, and curium). The primary radionuclide in the waste is plutonium. Most of the wastes are shipped and disposed of in 208-L (55-gal) drums. Magnesium hydroxide in bags is co-emplaced with the wastes. This fill material controls the local pH to minimize the potential solubility of the plutonium. It is a type of engineered barrier, which is based on modifying the local chemical environment.

C. HLW Disposal

HLWs, like ILWs, require geological disposal because they contain significant concentrations of long-lived

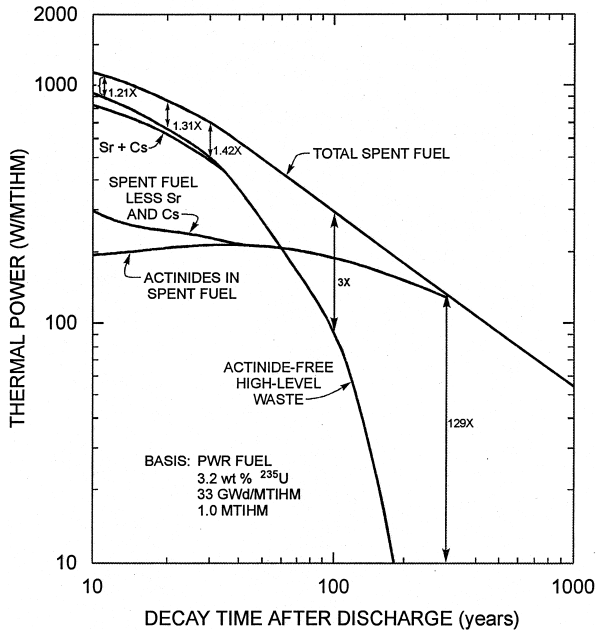

FIGURE 5 Decay heat from SNF and the major radionuclides in SNF as a function of time.

radionuclides. However, unlike those in ILWs, the concentrations of short and long-lived radionuclides in HLWs are sufficient such as to generate significant decay heat for long time periods. The radioactive decay heat raises local temperatures in the repository. Excessively high temperatures may damage waste forms, waste packages, the facility, and the local geology. This, in turn, may degrade the performance of the repository and increase the uncertainties in how the repository will preform. The decay heat of SNF and the major radionuclides in SNF as a function of time is shown in Fig. 5.

Figure 6 shows the proposed Yucca Mountain repository for HLW and SNF, which is generated in the United States. Access to this proposed repository at a depth of ~300 m is by inclined tunnel in the side of the mountain. The site is currently being investigated for its suitability as a disposal site. The main underground tunnel, which connects the two entrances, has been completed to allow an investigation of the geology. Assuming that the site is acceptable, parallel disposal tunnels will be mined for disposal of HLW. The facility is scheduled to open in 2010.

To avoid the potential consequences of excessive temperatures, the quantities of HLW (including SNF) per package are limited, and the waste packages will be dispersed in parallel tunnels to limit the maximum temperatures in the repository. The proposed repository would package wastes in over 10,000 waste packages, distributed in over 100 km of parallel disposal drifts (tunnels), each 5.5 m in diameter. The decay heat per package is limited to 11.8 kW. From a distance, the repository layout looks like a massive, underground, horizontal radiator. The large number of parallel tunnels with distributed waste packages, like a radiator, distribute the heat over a sufficient area such as to avoid excess local temperatures. The heat will ultimately be conducted through the rock to the surface of the earth. Every other proposed HLW and SNF repository has a similar layout to disperse the heat and limit repository temperatures.

The higher temperatures and the need to distribute the wastes over a large area have many impacts on repository design. The costs of HLW and SNF disposal are much higher than the cost of ILW or LLW disposal. All components of the repository must be designed to operate at higher than ambient temperatures. Distributing the waste lowers the temperatures, but the temperatures will still be significantly higher than the local rock. The heat complicates the prediction of long-term behavior of the repository.

There are several underground laboratories worldwide where researchers are investigating methods for disposal of HLW and SNF; however, there is no operational HLW repository. Siting such repositories is highly controversial; thus, building a repository is both a technical and political challenge.

Four factors determine which radionuclides present the greatest long-term potential to escape the repository: quantity, half-life, type of radiation, and chemistry. Only long-lived radionuclides exist for a sufficient time such as to potentially escape a repository. The radionuclides that present the greatest hazard are those that (1) could be dissolved in groundwater or be transported as colloids (very small particles) in groundwater and (2) concentrate in biological tissues. For most repository environments, the radionuclides of greatest concern are ^{99}Tc, ^{129}I, and ^{237}Np. Each of these radionuclides has a long half-life and

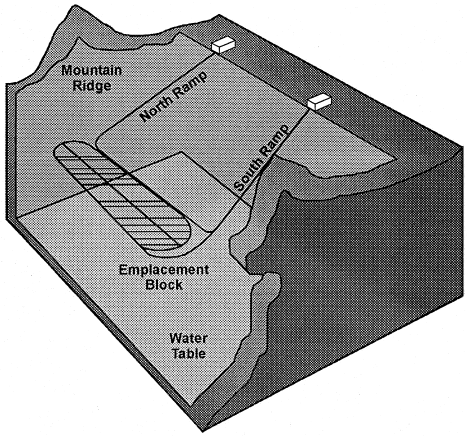

FIGURE 6 Schematic of the proposed Yucca Mountain repository.

has chemical behavior that potentially allows transport by groundwater to man.

Proposed repositories are designed with multiple barriers to prevent the release of radionuclides to the environment. Different nations are considering different barriers to prevent radionuclide migration. All current proposed repository designs use some type of steel package with the internals similar to those used in dry storage casks for SNF and HLW. Different materials of construction are used on the outside of the waste package to assure a long package lifetime. Like ILW disposal facilities, the geology provides a major barrier for release of radionuclides to the environment.

The United States is investigating disposal of SNF and HLW glass in tuff rock at Yucca Mountain in Nevada—as discussed earlier. The repository is above the water table. Groundwater entry into the waste package is to be delayed for thousands of years by (1) a steel package with an outer layer of a corrosion resistant nickel alloy, and (2) a titanium drip shield over the waste package to divert descending groundwater away from the WP. The packages will be placed in the middle of the disposal tunnels.

Sweden and Finland are investigating a repository design, which uses copper packages buried deep in granitic rock. Native (metallic) copper has existed in Scandinavian granite for over a billion years. By using the same material under the same conditions in the same rock, the geological evidence that copper will remain intact for very long times can be used to provide confidence that waste packages will last for millions of years. In these systems, the waste packages will be placed in large boreholes in the tunnel floor and a clay layer will be used between the packages and the borehole walls. The clay layer is a secondary barrier to water flow and adsorbs radionuclides that ultimately escape from the waste package after its failure. As a water flow barrier, it allows only diffusion of radionuclides through the clay—no bulk water flow. Diffusion is a very slow process that retards radionuclide escape after the waste package ultimately fails.

Germany is investigating siting a repository in salt. Salt deposits have several desirable properties. Ancient salt deposits prove by their continued existence the long-term stability of their geological environments. Their high thermal conductivity reduces the necessary spacing between waste packages to limit temperatures. Salt is impermeable and semiplastic. Consequently, over a period of decades to centuries, holes in salt close and thus seal the spaces around a waste package.

D. Advanced Concepts

There are alternatives to traditional geological disposal of HLW. The technically most viable alternative in terms of today's technologies is disposal in seabeds. Stable, deep areas of the oceans (3000 m deep), where thick sediment layers have been deposited and that are free from water currents, would be selected as disposal sites. Some of these areas are considered to be among the most stable geophysical features on this earth. This method consists either of (1) drilling holes in the seabed, placing the waste containers in the holes, and then inserting a plug of inert material, or (2) allowing the canisters (fitted with pointed ends and fins) to drop vertically into the sediments at a velocity high enough such that they become deeply embedded. Sediment would then fall and settle into the hole produced and thus provide a protective layer or seal. Any radioactive material leaking out of the containers would be held by the sediment.

Technical evaluations suggest that seabed disposal is a superior disposal option because of (1) the geologic stability of the seabed and its ability to contain radioactivity, (2) the extreme isolation from man and the lack of any commercial value of the deep seabed, and (3) the availability of large volumes of water for dilution to safe levels of any radionuclides that escape the seabed. Balancing these advantages are the engineering difficulties and major international political uncertainties.

The use of the ocean as a fail-safe mechanism to assure isolation of radionuclides from man has been proposed by many major scientific panels as a significant advantage for seabed disposal, repositories located on isolated islands, and repositories located near the sea. Ultimately, there are two principal methods to minimize impacts to man and the environment from hazardous materials: geological isolation and mass dilution of the hazardous material to very low concentrations. If man's wastes could be evenly diluted in the ocean, the concentrations would be at safe levels. Disposal siting near or under the ocean provides this secondary, totally independent mechanism for protection of man and the environment as a backup for any unexpected radionuclide leakage from a repository.

A second area of active research is waste partitioning and transmutation (P–T). The concept is to separate particularly hazardous, long-lived radionuclides from HLW and selectively destroy those radionuclides—usually by bombardment with neutrons from a nuclear reactor or accelerator. It is generally proposed to destroy selected actinides (neptunium, plutonium, americium, and, curium) and two long-lived fission products (^{99}Tc and ^{129}I). With most long-lived radionuclides destroyed, it would be easier to demonstrate safe disposal of the remaining radionuclides. The technology exists to destroy some of these radionuclides but not all such radionuclides. There are two practical issues: costs and risks. P–T requires large-scale industrial operations; thus, there is a trade-off between reducing long-term risks at the cost of increasing short-term

risks. Major programs to investigate these options are underway in Europe and Japan.

Last, there is active research on separating HLW into a low-heat fraction and a high-heat radionuclide (HHR) fraction and separately disposing of the two categories of waste. As discussed earlier, decay heat controls HLW repository design. As shown in Table I and Fig. 5, the decay heat is primarily generated by five elements: two fission products [strontium (^{90}Sr) and cesium (^{137}Cs)] and three actinides [plutonium (multiple isotopes), americium (multiple isotopes), and curium (multiple isotopes)]. If the HHRs are separated out, the remaining low-heat radionuclides become ILWs with (1) significantly lower disposal costs and (2) potentially better repository performance by the elimination of heat sources that can degrade the system. Some or all of the long-lived HHR actinides may be destroyed in power reactors. The shorter-lived HHRs (^{90}Sr and ^{137}Cs) would be either stored until they decayed to low levels or disposed of in a special repository, which would be designed for short-lived, HHRs. Because of the shorter half-lives, there are potentially low-cost disposal methods for these two radionuclides.

VI. WASTE ANALOGS

The natural radioactivity of the earth far exceeds the radioactivity created by man. Natural fission reactors have existed on the earth for billions of years and have generated large quantities of radioactivity. Nuclear reactors are created when there are sufficient concentrations of fissile materials. In the past, many uranium ore bodies had conditions that allowed the ore bodies to become natural nuclear reactors. Naturally occurring nuclear reactors no longer occur because the decay of fissile ^{235}U has lowered the ratio of ^{235}U to ^{238}U in natural uranium below that needed to sustain a nuclear reactor. Uranium ore bodies are found worldwide.

These natural experiments provide analogues for the disposal of radioactive wastes. In some cases, natural radioactive and other toxic materials have been dispersed. In other cases, the radioactive and other toxic materials have been contained. Our understanding of those conditions where toxic materials and radionuclides have been isolated from the biosphere for long periods of time provides much of the basis for confidence in the performance of disposal facilities. Because it is not practical to conduct experiments for thousands of years, natural analogues play an important part in understanding the performance of disposal sites.

The use of natural analogs extends beyond understanding disposal sites. Most advanced waste forms are variations of natural minerals that have existed for very long time periods in the natural environment. Similarly, some package materials such as copper have been chosen because these materials in natural forms have existed as stable materials for billions of years.

Analog data must be used with care. We do not have detailed historical records of the past and thus do not know fully the conditions under which natural analogs have survived. However, they provide the only long-term data to supplement information collected in the laboratory.

VII. OTHER CONSIDERATIONS

A. Economics

Economics is not a major issue in radioactive waste management. While the cost of HLW and SNF disposal is measured in tens of billions of dollars, the cost is only a few percent of the cost of electricity generated by nuclear power. The energy obtained from fissioning 1 g of uranium is about a million times that of burning 1 g of coal. The volumes of radioactive wastes, particularly HLW, are extremely small as compared to the volumes of wastes generated by other energy technologies. It is the small volumes that allow the use of technologies with a high cost of disposal per unit volume but low costs per unit of electricity produced. In the United States, the cost for disposal is paid with a tax on electricity generated from nuclear power of 1 mil/kWh.

B. Regulations

Radioactive waste treatment, transportation, and disposal are regulated by national authorities. In the United States, the U.S. Environmental Protection Agency (EPA) defines the standards for safe disposal. These are broad standards that define the maximum allowable exposure of the public from various sources of radiation. The U.S. Nuclear Regulatory Commission (NRC) is responsible for regulation of wastes from commercial activities. It develops regulations and issues licenses to commercial firms that are designed to assure that EPA standards are met. The NRC allows states the option to regulate certain activities including disposal of LLW; but, in all cases radiation exposures must not exceed federal standards. The U.S. Department of Energy operates most government facilities that treat and dispose of radioactive wastes. It is responsible for the regulation of its own facilities, but it must generally meet EPA standards.

The International Atomic Energy Agency (IAEA) develops international standards for transport of radioactive materials. These standards must be met for transporting radioactive materials across national boundaries. The

standards are developed by international committees, which include representatives from the major nations of the world. Most countries, including the United States, then adopt these standards directly as national standards or incorporate consistent requirements within their national regulatory framework. In the United States, the U.S. Department of Transportation is responsible for general transport regulations, while the NRC is responsible for developing regulations and issuing licenses for radioactive material transport packages which contain fissile material or large quantities (Type B) of radioactive materials.

C. Cold War Legacy

The cold war left a massive radioactive waste management legacy in the United States and several other countries, including the former Soviet Union. Treatment and disposal facilities for ILW and HLW were not built. HLW from World War II is still stored in tanks and is not yet solidified.

Storage of untreated wastes and the costs for remedial actions on facilities as they degrade will far exceeded what it would have cost to immediately convert these wastes to stable forms and properly dispose of the wastes. Recent evaluations by the U.S. National Academy of Sciences indicate that these legacy wastes have also resulted in long-term contamination of large quantities of land, which, in turn, require long-term control of these lands. A major effort is being undertaken to treat, package, and dispose of these wastes. The first HLW glass melter in the United States became operational in the 1990s to begin to solidify the inventory of HLW. The WIPP facility became operational in 1999. However, it will require many decades and hundreds of billions of dollars to address these legacy wastes.

There are equally serious legacies of institutional mistrust and misunderstandings about waste management. The history of waste management has often led to the incorrect conclusions that it is not technically feasible to safely manage radioactive wastes and that the costs are unavoidably large. The high cost of remedial activities masks the real-world experience in several countries that waste management is not an expensive operation if (1) waste management is considered before the waste is generated so as to minimize waste quantities and (2) wastes are treated for storage or disposal as they are generated. Treated and packaged wastes have low storage costs and generally smaller volumes than untreated wastes. Many untreated wastes are somewhat chemically reactive and corrode and degrade their storage facilities. There is an increased probability that untreated wastes may leak from the facilities and make contact with land or groundwater. Storage of untreated wastes and other such practices can greatly increase the cost and institutional difficulties of waste management.

D. Nuclear Criticality, Safeguards, and Security

SNF and some types of defense wastes contain significant quantities of fissile materials, such as ^{235}U, ^{233}U, and plutonium. In sufficient concentrations, fissile materials can form a critical mass, operate as an uncontrolled nuclear reactor, and generate (1) locally high radiation fields and (2) added radioactive fission products. Some fissile materials in wastes can also be used to construct nuclear weapons. These characteristics impact waste management.

Nuclear criticality in a disposal site can be prevented by several methods. One method is to add uranium-238 (^{238}U) to wastes containing fissile uranium isotopes. The ^{238}U acts as a neutron poison to prevent nuclear criticality. In the natural environment, there is no chemical mechanism that can cause significant isotopic separation of different uranium isotopes; thus, isotopic dilution permanently prevents nuclear criticality. Nuclear criticality is prevented by the addition of $\sim$100 g of ^{238}U for each gram of ^{235}U and by the addition of $\sim$200 g of ^{238}U for each gram of ^{233}U.

The other approach for criticality control is to dilute the fissile isotopes with other materials until it is not credible that natural mechanisms will concentrate fissile isotopes into a critical mass. From a long-term perspective, as uranium migrates through rock, the fissile uranium is mixed with natural ^{238}U, which is found in all rock, and is isotopically diluted until nuclear criticality can no longer occur. Plutonium-239 decays to ^{235}U, and thus criticality control is ultimately prevented by isotopically diluting the ^{235}U with ^{238}U.

Some fissile materials can be used to build nuclear weapons. It is important to prevent the loss of such materials. In most radioactive wastes, there is either no fissile material, or the fissile content is sufficiently low such that it is not practical to recover fissile materials and then use the materials to construct nuclear weapons. The fissile concentration levels below which fissile material recovery from wastes is considered impractical are defined by the IAEA. These concentration levels are chosen so that it would be significantly easier to acquire fissile materials by other production routes than by the recovery of fissile materials from wastes.

Weapons-usable uranium is found in some defense wastes, military reactor SNF, and some research wastes. Commercial nuclear power plants do not use weapons-usable uranium. Weapons-usable uranium can be converted to non-weapons-usable uranium by isotopic dilution with ^{238}U. Uranium-235 must be diluted to less than

20% ^{235}U in ^{238}U. Uranium-233 must be diluted to less than 12 wt% ^{233}U in ^{238}U.

SNF usually contains plutonium produced during reactor irradiation. The plutonium is difficult to recover because of the high radiation levels associated with SNF. The radiation levels decrease over decades and centuries. If SNF is disposed of as a waste, the plutonium remains as a weapons-usable material. However, it is protected from possible theft by geological disposal, which places the wastes hundreds of meters underground.

E. SNF Processing Versus Disposal

As a waste form, SNF is unique. The SNF can be (1) considered a waste or (2) processed to recover the plutonium and uranium and recycle them for manufacture of reactor fuel. If it is processed, HLW is produced. The decision to consider SNF as a waste or to recycle it is a political and economic decision.

In waste management, SNF is a difficult waste to dispose of because (1) it is highly radioactive, (2) it generates significant decay heat, and (3) it is not a custom-designed waste form such as HLW glass. Nuclear fuel is designed to produce energy in a reactor, not as a waste form. SNF can be safely disposed of; however, the disposal techniques require use of long-lived waste packages and other features that would allow intact recovery from a repository for many centuries. The requirements for safe disposal imply that this unique waste form could be recovered by man in the future if the energy content of the SNF is needed to meet worldwide energy demands. It is an important policy and technical characteristic of SNF waste management.

F. Public Policy

Radioactive waste management is a complicated technical task and a controversial political issue. The political complexities reflect historical legacies, particularly of World War II and the subsequent cold war, and the long time frames associated with waste management.

Most risks faced by mankind are immediate: a vehicle driver makes a mistake, an accident occurs, someone is hurt, someone is at fault, and actions can be taken to correct the problem. Many of the risks from hazardous waste management (chemical, elemental, and radioactive) are different. There are operational hazards, but there are also long-term hazards. It may take years or centuries for a waste form to degrade, the containers to corrode, and the radionuclide to be transported by groundwater to man. Relatively simple packaging can minimize near-term risks and export risks to the future.

These technical characteristic of hazardous waste management creates complex moral, legal, and economic issues. Societies learn from experience but the time between an action and the consequences of that action may be separated by years or centuries. This is a fundamental reason why hazardous waste management activities are often more controversial than other industrial activities. Waste management requires that societies think long term and take actions today to avoid future potential problems. However, this has not been the historical tradition in many societies.

The most important factor for successful waste management is for society to have clearly defined and agreed-upon goals. The most successful waste management programs worldwide have had this characteristic. However, in many cases, this has yet to occur. Disagreements over nuclear weapons policies, nuclear power, and environmental goals all impact waste management and are what separate waste management from many other technical activities of man.

SEE ALSO THE FOLLOWING ARTICLES

DOSIMETRY • FISSION REACTOR PHYSICS • HEALTH PHYSICS • ISOTOPES, SEPARATION AND APPLICATIONS • MINING ENGINEERING • NUCLEAR FUEL CYCLES • NUCLEAR POWER REACTORS • RADIATION PHYSICS • RADIOACTIVE WASTE DISPOSAL (GEOLOGY) • RADIOACTIVITY

BIBLIOGRAPHY

Cowan, G. A. (July 1976). "A natural fission reactor," *Scientific American* **235,** 36.

Forsberg, C. W. (August 2000). "Rethinking high-level waste disposal: Separate disposal of high-heat radionuclides (^{90}Sr and ^{137}Cs)," *Nucl. Technol.* **131,** 252–268.

International Atomic Energy Agency (2000). "Safety of Radioactive Waste Management," Vienna.

Nuclear Energy Agency, Organization of Economic Cooperation and Development (1988). "Feasibility of Disposal of High-level Radioactive Waste Into The Seabed," Paris.

Tang, Y. S., and Saling, J. H. (1990). "Radioactive Waste Management," Hemisphere Pub. Corp., New York.

U.S. Department of Energy (December 1997). "Integrated Data Base Report—1996: U.S. Spent Nuclear Fuel and Radioactive Waste Inventories, Projections, and Characteristics," DOE/RW-0006, Rev 13, Washington, DC.

U.S. Department of Energy (July 1999). "Draft Environmental Impact Statement for a Geological Repository for the Disposal of Spent Nuclear Fuel and High-Level Radioactive Waste at Yucca Mountain," Nye County, Nevada, DOE/EIS-0250D, Washington, DC.

U.S. National Research Council (1996). "The Waste Isolation Pilot Plant—A Potential Solution for the Disposal of Transuranic Waste," National Academy Press, Washington, DC.

U.S. National Research Council (1996). "Nuclear Wastes: Technologies for Separations and Transmutation," National Academy Press, Washington, DC.

U.S. National Academy of Sciences (2000). "Long-Term Institutional Management of U.S. Department of Energy Legacy Waste Sites," National Academy Press, Washington, DC.

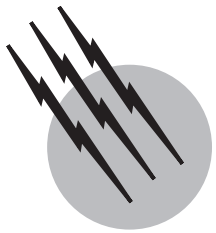

Radioactivity

Vincent P. Guinn
University of California, Irvine

I. Nature, Notation, and Units
II. Mass–Energy Relations
III. Mathematical Description
IV. Random Statistics of Decay
V. Discovery of Radioactivity
VI. Man-Made Radionuclides
VII. Types of Radioactive Decay
VIII. Decay Scheme Representations
IX. Measurement of Radioactivity
X. Safe Handling of Radioactive Materials
XI. Uses of Radionuclides

GLOSSARY

Alpha particle Helium-4 nucleus, emitted by radionuclides that decay by α emission.

Atomic mass Exact mass of an atom of a particular atomic number and mass number, in atomic mass units, on the carbon-12 atomic weight scale.

Atomic mass unit (amu) Mass, in grams, of one-twelfth of the mass of a carbon-12 atom.

Atomic nucleus Central part of an atom containing the nucleons.

Atomic number (Z) Number of protons in an atomic nucleus, numerically the same as the atomic number of the element in the periodic system.

Beta particle Energetic electron, of either negative charge (β^-) or positive charge (β^+), emitted in the β decay of various radionuclides.

Curie Fundamental unit of amount of radioactivity; $1\ \text{Ci} = 3.700 \times 10^{10}$ disintegrations per second.

Decay constant Proportionality constant λ relating the decay rate of a given radionuclide and the number N^* of such nuclei in a sample, $-dN^*/dt = \lambda N^*$.

Electron volt (eV) Kinetic energy of an electron after falling through a potential difference of 1 V; typical radioactive decay events emit energy in the range of millions of electron volts (MeV).

Gamma rays Energetic electromagnetic radiation emitted as photons in the decay of various radionuclides.

Half-life Length of time required for a large number of nuclei of a particular radionuclide to decrease to half the original number.

Mass number (A) Total number of nucleons in an atomic nucleus of a given species, that is, the sum of the number of protons (Z) and the number of neutrons (N).

Nucleons Protons and neutrons in an atomic nucleus.
Nuclides Nuclei, whether stable or unstable, of a particular Z and A, of atoms.
Radioactivity Process of radioactive decay of unstable atomic nuclei.

RADIOACTIVITY is the phenomenon of the spontaneous disintegration of unstable (i.e., radioactive) atomic nuclei. In the decay process, one or more kinds of energetic ionizing radiation (particles or electromagnetic radiation) are emitted. A very large number of radionuclides, both naturally occurring and man made, are now known. Many of these radionuclides are used extensively in scientific research, in nuclear medicine, and in various other practical applications.

I. NATURE, NOTATION, AND UNITS

Radioactivity is the phenomenon of the spontaneous disintegration of unstable atomic nuclei to atomic nuclei to form more energetically stable atomic nuclei. Radioactive decay is a highly exoergic, statistically random, first-order process that occurs with a small amount of mass being converted to energy. Since it is a first-order process, each radioactive species is characterized by its own half-life, the length of time in which an initially very large number of such nuclei will have decayed to only half the original number. In radioactive decay, a relatively large amount of energy is liberated in each disintegration—typically about 1 million times more than the amount of energy liberated in an exothermic chemical reaction, that is, a few million electron volts (MeV) of energy per nucleus, compared to only a few electron volts (eV) of energy per atom or molecule. Since radioactive decay is a nuclear rather than an electronic phenomenon, its rate for a given radioactive species (radioisotope or radionuclide) is not altered measurably by changes in temperature or pressure; the only exception to this is the production of very slight changes in half-life by the use of great pressures on a few radionuclides that decay by the process of orbital electron capture (EC).

Unstable (i.e., radioactive) species are represented by the chemical symbol of the element with the mass number of the species shown as a subscript to the left and the atomic number shown as a superscript to the left. For example, the widely used radioactive tracer for carbon, carbon-14 with a 5730-year half-life, is abbreviated as ${}^{14}_{6}\mathrm{C}$. This representation is useful in balancing nuclear reaction decay and bombardment equations, but is redundant since the chemical symbol already identifies the atomic number. Thus, carbon-14 is often shown merely as ${}^{14}\mathrm{C}$. Some radioactive species are metastable excited states (of significant half-life) of either a stable nuclide or a radionuclide. To represent such radionuclides, the letter m is added to the mass number superscript—until recently, also to the left of the symbol (e.g., ${}^{77\mathrm{m}}_{34}\mathrm{Se}$), or by recent convention, to the right of the symbol (e.g., ${}^{77}_{34}\mathrm{Se}^{\mathrm{m}}$). Atomic nuclei have been shown to consist of spherical clusters of two kinds of fundamental particles called nucleons: neutrons and protons. The atomic number Z of a nuclide is simply the number of protons in its nucleus; the mass number A of a nuclide equals the total number of nucleons in its nucleus, that is, $Z + N$, where N is the number of neutrons in the nucleus.

In all atomic nuclei, both stable and unstable, the nucleons are tightly bound to one another by short-range nuclear forces (balancing the Coulomb repulsions among the protons). To eject one of the nucleons from a nucleus typically requires some 5–10 MeV of input energy per nucleus. Particle-scattering measurements indicate that nuclei have radii of about $1.5 \times 10^{-13} A^{1/3}$ cm, or $1.5A^{1/3}$ fermis (fm), the A being the mass number. Thus, of the nuclides found in nature, the "physical" or scattering radii range from about 1.5×10^{-13} cm (for ${}^{1}\mathrm{H}$) up to 9.3×10^{-13} cm (for ${}^{238}\mathrm{U}$), or $1.5 - 9.3$ fm. The corresponding scattering nuclear cross-sectional areas (πr^2) thus range from 7.1×10^{-26} cm^2 (${}^{1}\mathrm{H}$) to 2.7×10^{-24} cm^2 (${}^{238}\mathrm{U}$), that is, from 0.071 to 2.7 barns (b). Since atoms have effective radii of around 1 angstrom unit (1 Å $= 10^{-8}$ cm), whereas even large nuclei have radii of only about 10^{-12} cm, it is evident that the nucleus of an atom is very tiny compared with the size of the atom—the volume of the nucleus ($4\pi r^3/3$) being only some 10^{-15} to 10^{-12} the volume of the atom. However, the nucleus contains all of the positive electrical charge (Z protons) of the atom and some 99.9+% of the mass of the atom; the Z orbiting electrons sweep out a far larger volume, constituting all of the negative electrical charge of the atom, but amount to less than 0.1% of the mass of the atom. The mass concentration in the nucleus is due to the fact that neutrons and protons are much heavier than electrons: $m_{\mathrm{n}} = 1.008665$ amu, $m_{\mathrm{p}} = 1.007276$ amu, and $m_{\mathrm{e}} = 0.0005486$ amu (these are rest masses on the atomic weight scale, with the mass of a ${}^{12}\mathrm{C}$ atom set at exactly 12.000000 amu so that 1 amu $= 1.660 \times 10^{-24}$ g). The $E = mc^2$ energy equivalent of 1 amu is 931.50 MeV.

The primary unit of amount of radioactivity is the curie, defined as a disintegration rate of exactly 3.700×10^{10} disintegrations per second (dis/sec). Subunits are the picocurie, pCi (10^{-12} Ci or 3.700×10^{-2} dis/sec); nanocurie, nCi (10^{-9} Ci or 3.700×10 dis/sec), microcurie, μCi (10^{-6} Ci or 3.700×10^{4} dis/sec), and millicurie, mCi (10^{-3} Ci or 3.700×10^{7} dis/sec). Larger units are the kilocurie, kCi (3.700×10^{13} dis/sec), and the megacurie, MCi (3.700×10^{16} dis/sec). In very low-level counting

work, picocurie to nanocurie amounts of activity are typically measured. In more usual counting work, such as in most radiotracer or nuclear activation analysis studies, microcurie amounts are typical. In purchasing radionuclides for radiotracer studies, millicurie amounts are often obtained. Curie and larger amounts of radioactivity are potentially quite hazardous, and special means must be taken to work with such amounts safely. Historically, the numerical value of the curie (named after Marie Curie), 3.7×10^{10} dis/sec, was defined as the disintegration rate of 1 g of radium-226. More recently, a new international unit for disintegration rate, the becquerel (1 bq = 1 dis/sec), has been introduced.

II. MASS–ENERGY RELATIONS

In the spontaneous process of radioactive decay, each disintegration releases a relatively large amount of energy, of the order of millions of electron volts or fractions of an MeV. In all but one of the various kinds of radioactive decay (discussed in Section VII), the energy release in the decay of a radionuclide can be calculated from the mass decrease occurring in the nuclear reaction, using atomic masses even though the process is a nuclear one. Stemming from very precise isotope mass spectrometer measurements, comprehensive tables of atomic masses are available for all of the stable isotopes and most of the known radioisotopes. Most of these mass values, in atomic mass units, are known to five, six, or seven decimal places. As an example, to calculate the amount of energy released (Q) when a polonium-210 nucleus decays by α-particle emission to form a stable lead-206 nucleus ($^{240}_{84}\mathrm{Po} \rightarrow {}^{206}_{82}\mathrm{Pb} + {}^{4}_{2}\mathrm{He}$), one subtracts the total atomic masses of the products (205.97444 amu + 4.00260 amu) from the atomic mass of the ^{210}Po (209.98285 amu) and then multiplies this mass decrease of 0.00581 amu by 931.50 to obtain $Q = 5.41$ MeV. In all radioactive decay reactions, both electrical charge (total Z) and mass number (total A, that is, total number of nucleons) is conserved.

III. MATHEMATICAL DESCRIPTION

Soon after radioactivity was discovered, it was observed that the rate of disintegration, or decay rate, of a separated single radioactive species exhibited two main characteristics: (1) it was a statistically random process, and (2) at high decay rates it was a first-order process (i.e., the rate of decay, $-dN^*/dt$, was proportional to the number of such radionuclei present, N^*, at any given time: $-dN^*/dt = \lambda N^*$). When this differential equation is integrated, the resulting equation is $N^* = N_0^* e^{-\lambda t}$, where N_0^* is the number of such radionuclei initially present, N^* the number of them still present (undecayed) after a decay period t, and λ the first-order rate constant of that species. If the disintegration rate ($-dN^*/dt$) is termed the "activity" of a sample of a single radioactive species and represented by the letter A, it also follows that $A = A_0 e^{-\lambda t}$. The relationship between the decay rate constant λ and the half-life T of a single radioactive species, $\lambda = \ln 2/T = 0.69315/T$, is readily derived by setting N^*/N_0^* equal to $1/2$ in the equation $N^*/N_0^* = e^{-\lambda t}$, then taking the natural logarithm of both sides of the equation and solving for t.

The logarithm of the decay rate of any single radioactive species displays a linear relationship with decay time: $\log A = \log A_0 - 0.4343\lambda t$, or $\log A = \log A_0 - 0.30103t/T$ (or, in natural logarithms, $\ln A = \ln A_0 - \lambda t = \ln A_0 - 0.69315t/T$). Semilogarithmic plots of experimental disintegration rates (or counting rates, since counting rate $= \varepsilon \times$ disintegration rate, where ε is the overall counting efficiency for that radionuclide with a given radiation detector) provide a convenient way of measuring the half-life of a single radioactive species. Also, if a radioactive sample consists of a mixture of two or three radionuclides of sufficiently differing half-lives, such semilogarithmic plots can be resolved into the individual contributions of the species present, giving the half-life of each and the relative contribution of each to the total counting rate at any particular decay time.

IV. RANDOM STATISTICS OF DECAY

Within a few years after the discovery of radioactivity in 1896, observations with even such early counting devices as the spinthariscope showed that the decay rate of a low-activity sample of any single radioactive species was not a smooth function of time, but rather bounced around in a statistically random fashion. It was soon established that, if a sample of a particular radionuclide contained N_0^* of such nuclei at one time, it would decay to a number N^* equal to $N_0^* e^{-\lambda t}$ in a decay period t, if N_0^* and N^* were both very large numbers (λ being the first-order decay constant of the radionuclide, equal to $0.69315/T$). This exponential relationship is the result of the fact that λ may also be considered as the probability that a given nucleus of this type will undergo decay in a unit period of time.

A further consequence of the statistically random character of radioactive decay is that if N decays are observed, the standard deviation of N is simply $N^{1/2}$: $\sigma_N = \pm N^{1/2}$. Thus, if a very long-lived radioactive species is counted identically many times, each time for the same length of time, the number of observed counts N will show a Gaussian frequency distribution centered about the mean

value $\bar{N}$. The standard deviation of this distribution of values will be $\pm\bar{N}^{1/2}$. Even with much shorter-lived species, which may be decreasing in decay rate appreciably during the counting period, if identical samples of such a radionuclide are counted identically for the same length of time, the number of observed counts N will exhibit a Gaussian frequency distribution with a standard deviation of $\pm\bar{N}^{1/2}$.

V. DISCOVERY OF RADIOACTIVITY

The phenomenon of radioactivity was discovered in France in 1896 by Henri Becquerel—partly by accident. While studying the phosphorescence of various uranium ($Z = 92$) compounds, he was surprised to find that such compounds steadily emitted a quite penetrating radiation, capable of passing through the black paper in which fresh photographic film was packaged and affecting the film much as X rays did. At the time, uranium was well known as one of the elements of the periodic system, but its radioactivity had not hitherto been observed.

Many scientists began exploring this strange new phenomenon, with new discoveries being published essentially every month. Within a few years it had been shown that (1) the element thorium ($Z = 90$) was also radioactive, (2) various highly radioactive daughter products could be chemically separated from uranium, and (3) *in toto*, uranium and its daughter products emitted in their radioactive decay three different kinds of radiation, called α rays, β rays, and γ rays. The α rays were soon shown to be streams of energetic helium nuclei of mass number 4 (i.e., $^{4}_{2}$He nuclei), β rays streams of energetic electrons, and γ rays streams of energetic electromagnetic photons. The statistically random nature of radioactive decay was observed and the fundamental first-order nature of the decay of individual radionuclides established, each thus characterized by a half-life. Such important daughter products of the decay of 4.47×10^9-year $^{238}_{92}$U as 1600-year radium-226 ($^{226}_{88}$Ra), 3.82-day radon-222 ($^{222}_{86}$Rn), 22.3-year lead-210 ($^{210}_{82}$Pb), and 138-day polonium-210 ($^{210}_{84}$Po), were isolated and identified. The concept of different isotopes of the same element evolved from the fact that three different radioisotopes of the new element radon were observed: 3.82-day ^{222}Rn from ^{238}U decay, 55.6-sec ^{220}Rn (initially called thoron) from the decay of 1.40×10^{10}-year ^{232}Th, and 3.96-sec ^{219}Rn (initially called actinon) from the decay of 7.04×10^8-years ^{235}U. It was shown that, at the end of a series of α and β decay steps, the stable-isotope end product of the ^{238}U decay chain was lead-206 ($^{206}_{82}$Pb), whereas the ^{235}U decay chain ended with lead-207 and the ^{232}Th decay chain ended with lead-208. Early measurements showed that relatively huge amounts of energy, of the order of millions of electron volts, were released in typical individual nuclide decay events. The elements polonium, astatine, radon, francium, radium, actinium ($Z = 84$–89), and protactinium ($Z = 91$) were found to occur in nature, but only as radionuclide daughter products of U and Th.

Later, other natural radioisotopes were discovered, particularly 1.28×10^9-years $^{40}_{19}$K. Much later, two important radioisotopes made steadily in the upper atmosphere as a result of cosmic ray interactions were discovered: 5730-year $^{14}_{6}$C and 12.3-years $^{3}_{1}$H (tritium).

VI. MAN-MADE RADIONUCLIDES

Up to 1934, when the first two artificial radionuclides were produced, all work with radionuclides was limited to those chemically separated from uranium and thorium, that is, to radionuclides of atomic number equal to or greater than 80 (mercury).

In 1919 Ernest Rutherford carried out the first artificial transmutation of one element to another, producing stable $^{17}_{8}$O and $^{1}_{1}$H by bombarding stable $^{14}_{7}$N with α particles ($^{4}_{2}$He). It was not until 1934, however, that the first radionuclides were produced by man-made transmutation. Irene Curie (daughter of Marie Curie) and Frederic Joliot, using α particles from polonium, bombarded boron and aluminum, producing, respectively, 9.96-min $^{13}_{7}$N and 2.50-min $^{30}_{15}$P (the ejected particle in each case being a neutron). The two reactions may be represented in condensed notation as ^{10}B(α, n)^{13}N and ^{27}Al(α, n)^{30}P. Both ^{13}N and ^{30}P decay by positron emission.

At about the same time as the discovery of artificial radioactivity by Curie and Joliot, the neutron was discovered by James Chadwick (1932), the positron by Carl D. Anderson (1932), and deuterium ($^{2}_{1}$H) by Harold C. Urey (1933), and the first charged-particle accelerators were built in several laboratories. Very soon scientists were bombarding practically every element of the periodic system with accelerated protons, deuterons, and α particles—using the early Cockcroft—Walton accelerators, Van de Graaff accelerators, and cyclotrons—and producing and identifying hundreds of new radionuclides. The electron linear accelerator produced additional new radionuclides.

As particle accelerators of higher and higher accelerating potentials became available, more complex nuclear reactions could be induced in target elements (e.g., spallation reactions), and hundreds of additional new radionuclides—even farther from the "stability diagonal" of the chart of the nuclides—were produced and identified. The chart of the nuclides is a chart with atomic number as the ordinate and neutron number as the abscissa, with each square filled in with any known stable nuclide or known natural or artificial radionuclide. The stable nuclides, which occur in nature, cluster about a line called the

stability diagonal. Up to about $Z = 20$ (calcium), this line has a 45° slope (i.e., corresponding to $Z = N$), but it gradually decreases in slope with increasing Z, reaching a value of about $N/Z = 1.5$ at the high-Z end. Radionuclides to the right of the stability diagonal, being "neutron-rich," usually decay by β^- emission; those to the left of the diagonal, being "neutron-deficient" (or "proton-rich"), usually decay by β^+ emission and/or orbital electron capture.

When the thermal neutron-induced fission of $^{235}_{92}$U was discovered in 1939 by Otto Hahn and Fritz Strassmann, another class of neutron-rich radionuclides, the fission products, became available for study. Such studies were greatly advanced by the increasing availability in the mid-1940s of nuclear reactors, operating via the self-sustaining thermal neutron fission of ^{235}U and providing very high fluxes of thermal, epithermal, and fission-spectrum fast neutrons.

Nuclear reactors and accelerators also soon provided the means of producing new elements, ones not found in nature, the "transuranium elements." Commencing with the elements neptunium (Np, $Z = 93$) and plutonium (Pu, $Z = 94$), these new elements were soon followed by americium (Am, $Z = 95$), curium (Cm, $Z = 96$), berkelium (Bk, $Z = 97$), californium (Cf, $Z = 98$), einsteinium (Es, $Z = 99$), fermium (Fm, $Z = 100$), mendelevium (Md, $Z = 101$), nobelium (No, $Z = 102$), lawrencium (Lr, $Z = 103$), and elements 104, 105, 106, 107, and 109 (names for which are not yet agreed on). All of the transuranium elements are known only in radioactive form—each having various known radionuclides, of various mass numbers, that have been produced and characterized. For each of elements 93 through 102, from 11 (nobelium) to 20 (fermium) different radionuclides are known. For each of elements 103 through 105, from six to eight different radionuclides are known. For each of elements 106, 107, and 109, only one to three different radionuclides are known as yet. Between atomic numbers 1 and 83, two elements do not occur in nature (technetium, $Z = 43$, and promethium, $Z = 61$), but many manmade radionuclides of these two elements are known.

The 1983 General Electric "Chart of the Nuclides" lists some 2598 known nuclides: 260 stable nuclides, 25 very long-lived naturally occurring radionuclides, and 2313 man-made radionuclides—including metastable nuclear isomers (1889 between $Z = 1$ and $Z = 83$, 239 between $Z = 84$ and $Z = 92$, and 185 between $Z = 93$ and $Z = 109$). Of the 239 radionuclides between $Z = 84$ and $Z = 92$, 41 also occur naturally as daughter products of the decay of the very long-lived parents ^{232}Th, ^{235}U, and ^{238}U. Of the 1889 man-made radionuclides between $Z = 1$ and $Z = 83$, 465 are fission products, ranging in mass number from 72 to 167 and in Z from 29 (Cu) to 67 (Ho).

Of all of the 2313 man-made radionuclides, a high percentage have very short half-lives (in the range of microseconds, milliseconds, seconds, or minutes). These are too short-lived to be of practical use as radiotracers or as lasting radiation sources. However, a large number of longer-lived radionuclides (half-lives of about 1 day or longer), suitable for such applications, are produced commercially and are readily available. For example, one major supplier offers 100 different radionuclides, of 67 different elements. Some of these (e.g., ^{226}Ra) are naturally occurring, but most of them are reactor produced (some as fission products) or accelerator-produced. Such commercial suppliers also synthesize and market a large number of tritium (^{3}H)-labeled and ^{14}C-labeled compounds of research interest, as well as some compounds labeled with ^{32}P or ^{35}S.

Since the time of the 13th Edition of the chart of the Nuclides (1983), summarized in some detail above, the number of identified nuclides and nuclear isomers has continued to increase. In the latest edition of the chart (15th Edition, 1996), the total number has increased from 2598 (in 1983) to 3020 (in 1996).

VII. TYPES OF RADIOACTIVE DECAY

Radionuclides undergo radioactive decay by a variety of different processes, in each case the decay occurring spontaneously to a lower energy level; that is, all radioactive decay events are exoergic. If the initial decay event goes directly to the ground state of the product stable nuclide (or radionuclide), no γ radiation follows the event. However, if the initial decay event goes to an excited nuclear energy level of the product nuclide, γ-ray emission follows the event (in most cases in less than about 10^{-12} sec) as the excited product nucleus drops to its ground energy state, in one step or in a cascade.

The principal modes of decay that have been observed in radionuclides are α-particle emission, β^- emission, β^+ emission, orbital electron capture, internal conversion (IC), isomeric transition (IT), neutron emission, and spontaneous fission (SF). Most radionuclides decay entirely or almost entirely via one of these modes. However, quite a few radionuclides exhibit branched decays, with two or three different decay modes occurring, in different percentages of the decay (of a large number of nuclei) of that radionuclide. Even in these cases, of course, any one decaying nucleus can decay only by one of the two or three competing decay modes. An example of a radionuclide having a branched decay scheme is 12.7-hr $^{64}_{29}$Cu, which decays 43% by EC, 38% by β^- emission, and 19% by β^+ emission (the β^- emission forming stable $^{64}_{30}$Zn, the EC decay and the β^+ emission both forming stable $^{64}_{28}$Ni). In the following paragraphs, each of these eight primary modes of radioactive decay is discussed briefly.

A. α-Particle Emission

Although energetically possible for nuclides of mass number larger than about 140, α-particle emission is observed experimentally only among much heavier nuclei, namely (with only a few exceptions), ones with A greater than about 200. This is due to the effect of the Coulomb barrier to the escape of an α particle from the nucleus and is a relatively serious effect if the available decay energy (Q) is small. Alpha emitters emit monoenergetic α particles, with the shorter-lived ones emitting α particles with the highest energies. The Geiger–Nuttall relationship ($\log \lambda = a + b \log r$) relates the α-decay rate constant λ (equal to $0.69315/T$) and the α-particle range (r) in air for each of the three natural radioactivity decay series (here a and b are constants, a having different values for the ^{232}Th, ^{235}U, and ^{238}U decay series). The range in air (1 atm, 15°C) of α particles is related to the kinetic energy of the α particle, increasing from 1.0 cm for 2-MeV α particles up to 7.2 cm for 8-MeV α particles. Because of the Coulomb barrier effect, the half-life for α-particle decay is very strongly dependent on the decay energy Q, increasing from 1.64×10^{-4} sec (for ^{214}Po, $Q = 7.83$ MeV) up to 1.40×10^{10} yr (for ^{232}Th, $Q = 4.08$ MeV). In α decay, the α particle receives $(A-4)/A$ of the total energy release Q (the fraction $4/A$ being given to the product nucleus as recoil energy). In α decay, of course, the mass number of the product nucleus is 4 less than that of the radionuclide and its atomic number is 2 less. The α decay of $^{232}_{90}$Th, for example, is shown as $^{232}_{90}\text{Th} \rightarrow {}^{4}_{2}\text{He} + {}^{238}_{88}\text{Ra}$. Most α emitters are pure, or almost pure, α emitters, with very little accompanying γ radiation.

B. β- Emission

This is a much more common mode of radioactive decay, occurring with neutron-rich nuclei. In β^- decay, an energetic electron (β^- particle) is created by and emitted from the nucleus along with an antineutrino ($\bar{\nu}$, a massless electrically neutral particle). The energy release Q is shared by the β^- particle and the $\bar{\nu}$, so that $Q = E_{\beta^-} + E_{\bar{\nu}}$ in each decay. In a large number of decays of a given radioactive β^- emitter, the fraction of the energy release Q received by the β^- particle is typically about one-third of Q (and that received by the $\bar{\nu}$ about two-thirds of Q), but in any individual decay the β^- may receive anywhere from zero energy to all of Q (and similarly for the $\bar{\nu}$). Both β^- and $\bar{\nu}$ particles are fermions, of spin $\frac{1}{2}$ (as are β^+ and ν particles). Since at least a few of the β^- particles receive the full decay energy, Q is also termed $E_{\max}$ of the β^- particles emitted in that transition of that β^- emitter. The simplest of all β^- emitters is the free neutron, which decays with a half-life of 10.2 min ($^{1}_{0}\text{n} \rightarrow {}^{1}_{1}\text{H} + {}^{0}_{-1}\beta^- + {}^{0}_{0}\bar{\nu}$). The energy release Q in its decay may be calculated from the mass decrease in the process: 1.008665 amu (the neutron rest mass)–1.007825 amu (the mass of a ^{1}H atom, i.e., a proton plus an e^-), or 0.000840 amu. Multiplying Δm by 931.50 gives the Q value as 0.782 MeV. In all cases of β^- decay, a nuclear neutron changes to a nuclear proton, emitting a β^- particle and a $\bar{\nu}$, but the half-life may be (depending on the radionuclide) anywhere from much shorter than 10.2 min (e.g., 0.836-sec ^{8}Li) to much longer (e.g., 301,000-years ^{36}Cl). Although, as in α decay, there is a general correlation between Q and half-life in β^- decay (a large Q being related to a short half-life and vice versa), the relationship is more complicated than in the case of α decay. In β^-decay, the factors of spin change and parity change, in addition to the energy change Q, play a large role. Beta decays are classified as allowed, first-forbidden, second forbidden, etc., transitions, according to the spin and parity changes involved in the transitions.

Most β^- emitters involve concurrent (really almost immediately following) emission of γ-ray photons of one or more sharply defined energies. However, some β^- emitters are "pure" β^-emitters, with no accompanying gamma emission. In these, β^- emission leaves the product nucleus directly, in its ground energy state. The best known pure β^- emitters are 12.3-yr ^{3}H (tritium), 5730-years ^{14}C, 14.3-day ^{32}P, and 87.5-day ^{35}S, each of which is used extensively in radiotracer studies. As an example, the β^- decay of ^{32}P is shown as $^{32}_{15}\text{P} \rightarrow {}^{32}_{16}\text{S} + {}^{0}_{-1}\beta^- + {}^{0}_{0}\bar{\nu}$.

Whereas all radioactive decay processes are nuclear processes, one calculates the energy changes (Q values) from the various atomic masses, not including the rest mass of the β^- particle (or the positron in β^+ decay or the captured orbital e^- in EC decay), because the atomic electrons follow along with the nuclei and hence cancel out. In β^- decay, the rest mass of the β^- particle is already included in the calculation by using the atomic mass of the product. Thus, the Q value for the β^- decay of ^{14}C, to form stable ^{14}N, is simply 931.50 times the difference between the atomic mass of ^{14}C (14.003242 amu) and that of ^{14}N (14.003074 amu), that is, 931.50 times 0.000168, or 0.156 MeV. The only type of decay in which this atomic mass difference calculation of Q is slightly different is that of positron emission (discussed in Section VII.D). In all three types of decay that are classified as beta decays (β^-, β^+, and EC), there is no change in mass number, but the product nucleus has an atomic number one unit larger (β^- decay) or one unit smaller (β^+ and EC decay) than the radionuclide. In β^- decay, the product nucleus is either a stable nuclide or at least a less unstable nuclide, the neutron-to-proton change diminishing the neutron excess and forming a nucleus closer to (or on) the stability diagonal. The ranges of β^- (and β^+) particles in matter are $R = 407E_{\max}^{1.38}$ (for $E_{\max}$ values of 0.15–0.80 MeV)

and $R = 542E_{max} - 133$ (for $E_{max} > 0.8$ MeV), with R the range in milligrams per square centimeter and E_{max} in MeV.

C. Orbital Electron Capture

In decay by EC, an unstable proton-rich (or neutron-deficient) nucleus decreases its proton excess by capturing an orbital electron (usually a K-shell electron) of the same atom. An example of pure EC decay is that of 2.68-years ^{55}Fe, represented as $^{55}_{26}\mathrm{Fe} + {}^{0}_{-1}\mathrm{e}^{-} \rightarrow {}^{55}_{25}\mathrm{Mn} + {}^{0}_{0}\nu$. The Q for this decay is 931.50 times the difference between the atomic mass of ^{55}Fe (54.938296 amu) and the atomic mass of ^{55}Mn (54.938047 amu), that is 931.50 times 0.000249, or 0.232 MeV. In EC decay the energy release Q is given entirely to the emitted neutrino (ν), so monoenergetic neutrinos are emitted in EC decay, as opposed to the antineutrinos ($\bar{\nu}$) with a continuous energy spectrum (up to an E_{max} value) that are emitted in β^- decay. There is no change in mass number (i.e., no change in the number of nucleons, the change only involving a nuclear proton changing to a nuclear neutron), but the product nucleus is one unit lower in atomic number than the radionuclide.

One consequence of EC decay is that a vacancy is generated in one of the shells of orbital electrons of the atom (usually a K-shell vacancy, if Q exceeds the binding energy of a K-shell electron, otherwise an L-shell vacancy). The vacancy is promptly filled by a cascade of orbital electrons, resulting in the emission of K, L, M, ... X-ray photons. The only other mode of radioactive decay that also results in X-ray emission is that of internal conversion, discussed in Section VII.F. Unlike ^{55}Fe, which decays by pure EC directly to the ground state of the product nucleus (^{55}Mn), many proton-rich radionuclides have more complicated decay schemes, forming one or more excited states of the product nucleus, resulting in the prompt emission of monoenergetic γ-ray photons of one or more discrete energies. In EC decay, the conversion of a nuclear proton to a nuclear neutron forms a product nucleus that is either on or closer to the stability diagonal than was the radionuclide.

D. β^+ Emission

Decay by positron (β^+) emission is a second type of decay mode exhibited by many proton-rich radionuclides. In β^+ emission the product nucleus is the same as for EC decay of the same radionuclide, but a β^+ particle and a neutino are both emitted. The β^+ and ν share the energy release ($Q_{EC} - 1.022$ MeV), so both the β^+ and ν exhibit continuous energy spectra up to an E_{max} value (as in the case of $\beta^-/\bar{\nu}$ emission), rather than the monoenergetic ν emission of EC decay. When atomic masses are used to calculate the energy available to the β^+ and ν as kinetic energy, this energy is Δm time 931.50 − 1.022 MeV (the energy equivalent of two times the rest mass of an electron). For proton-rich nuclei, EC is a possible mode of decay for all positive values of Q_{EC}, but decay by β^+ emission is possible only if $Q_{EC} > 1.022$ MeV. In cases where $Q_{EC} > 1.022$ MeV, both modes of decay are possible, and thus in some such cases a fraction of the decays of the radionuclide occur by EC and a fraction occur by β^+ emission. An example of such a branched decay is 78.4-hr ^{89}Zr, which decays 78% by EC and 22% by β^+ emission. Even in cases where both types of decay are energetically possible, some proton-rich nuclei decay entirely by EC, some entirely by β^+ emission, and some by branched decay. In general, where both modes of decay are energetically possible, EC decay becomes predominant with increasing Z.

An example of a pure β^+ emitter (with no accompanying γ-ray emission) is 9.96-min ^{13}N ($^{13}_{7}\mathrm{N} \rightarrow {}^{13}_{6}\mathrm{C} + {}^{0}_{1}\beta^{+} + {}^{0}_{0}\nu$). In β^+ decay, as in EC decay, there is no change in mass number (a nuclear proton simply changing to a nuclear neutron), but the product nucleus is one unit lower in Z than the radionuclide. The transition results in a product nucleus on or closer to the stability diagonal. As with EC decay, some radionuclides are pure β^+ emitters, whereas others have more complicated decay schemes with accompanying γ-ray emission. Even pure β^+ emitters, it should be noted, emit 0.511-MeV positron annihilation radiation, resulting from the e^+/e^- annihilation process. This annihilation ($e^+ + e^- \rightarrow 2\gamma$) occurs when the β^+ has slowed down and encounters any negative electron. The sum of the rest masses of the two electrons disappears, and the 1.022 MeV of resulting energy appears as two 0.511-MeV γ-ray photons emitted 180° from one another in direction (conserving momentum). It should be noted that neutrinos and antineutrinos are not detected at all by normal radiation detectors.

E. Isomeric Transition

The IT mode of decay is possible when an excited nucleus is in a metastable isomeric state. Most nuclear excited states decay with an almost unmeasurably short half-life (e.g., $\sim 10^{-12}$ sec), but many metastable isomers are known that have half-lives in the range of seconds to minutes, hours, or longer. Most of these decay by γ-ray emission to the ground state of the stable nuclide or radionuclide. For example, 17.4-sec ^{77m}Se (or in the newer representation, ^{77}Se^{m}) decays by IT to the ground state of stable ^{77}Se with the emission of a 0.161-MeV γ-ray photon: $^{77m}_{34}\mathrm{Se} \rightarrow {}^{77}_{34}\mathrm{Se} + {}^{0}_{0}\gamma$. Thus ^{77m}Se is termed a metastable isomer of stable ^{77}Se. (In the case of ^{77m}Se, about half of the IT decays occur by γ emission and about half by the competing process of internal conversion,

discussed in the next subsection). Radionuclides in many cases also have metastable isomers. For example, 93.0-sec ^{124ml}Sb decays by IT in 75% of its decays, to the ground state of 60.2-day ^{124}Sb (the other 25% going by β^- emission to stable ^{124}Te). In some cases, of which ^{124}Sb is one example, a ground-state nuclide has two metastable isomers. For example, 20.2-min ^{124m2}Sb decays by IT to 93.0-sec ^{124ml}Sb, which in turn (as cited earlier) decays by IT to 60.2-day ^{124}Sb. Thus, there are three distinct radionuclides of Sb of mass number 124: ground-state ^{124}Sb and its two metastable isomers. When IT decay occurs with only γ-ray emission (and/or IC), there is no change in either Z or A.

Gamma radiation, whether emitted in IT decay or promptly following the β^-, β^+, or EC decay of many radionuclides, is much more penetrating (for the same energy) than α or β radiation and does not exhibit a finite range in matter. Instead, γ rays are absorbed exponentially: $I/I_0 = e^{-\mu x}$, where μ is the linear absorption coefficient for γ rays of a given energy in a given absorber material and x the thickness of the absorber in centimeters. Gamma-ray photons interact in matter mainly by three processes: photoelectric absorption (dominant at low energies), pair production (dominant at high energies and possible only for energies >1.022 MeV), and Compton scattering (dominant at intermediate energies).

F. Internal Conversion

Internal conversion is a mode of decay that competes with γ-ray emission, either prompt or delayed (as in the case of IT γ-ray emission). In IC, instead of emitting a γ-ray photon, the excited nucleus ejects an orbital electron of the same atom (usually a K-shell electron or, if Q is less than the binding energy of a K electron in the atom, an L-electron). In such cases, the ejected electron has a kinetic energy equal to Q minus the binding energy of the electron. Thus, unlike β^- particles, which are created in and emitted by the nucleus and have a continuous energy distribution up to an E_{max} value, conversion electrons are ejected from the K-shell (usually) of electrons outside the nucleus and are monoenergetic. Since IC decay (like EC decay) results in a K-shell (or in some cases L-shell) vacancy, the decay event is promptly followed by the emission of characteristic K, L, M, ... X-ray photons from the product atom. Internal conversion competes increasingly with γ-ray emission with increasing Z and decreasing Q.

G. Neutron Emission

The neutron emission mode of radioactive decay is almost entirely restricted to fission-product radionuclides that are far from the stability diagonal—that is, ones that are very neutron-rich. In most of such radionuclides, the initial decay is by β^- emission, but the product radionuclide is formed in such a highly excited state that enough energy is available for neutron emission to compete somewhat with γ-ray emission. The 1983 General Electric "Chart of the Nuclides" lists 74 such fission-product neutron emitters: 38 in the lower Z/lower A group and 36 in the higher Z/higher A group. The neutron emitters in the lower A group include very neutron-rich nuclides of eight elements in the range $Z = 32$–39 (Ga, As, Se, Br, Kr, Rb, Sr, Y) and $A = 79$–100. Those in the higher A group include nuclides of 10 elements in the range $Z = 47$–57 (Ag, In, Sn, Sb, Te, I, Xe, Cs, Ba, La) and $A = 122$–148. Almost all of the 74 neutron emitters have half-lives of fractions of a second or a few seconds. The longest-lived one, ^{87}Br, has a half-life of 55.7 sec. Essentially all of them emit a neutron in only a small fraction of their β^- disintegrations. Although such nuclides are too short-lived to be of use as radiotracers, they are of considerable importance in nuclear reactor control (0.65% of the neutrons emitted in the thermal-neutron fission of ^{235}U being such "delayed" neutrons) and in the neutron activation analysis of samples for uranium and thorium via the delayed-neutron method.

H. Spontaneous Fission

This is a mode of decay of a few of the highest-Z naturally occurring radionuclides and of many of the transuranium radionuclides. In all such cases, it is a minor mode of decay (α or β^- emission being the major modes), with only a small fraction of the decays occurring by SF. Perhaps the best known and most important such radionuclide is 2.64-year $^{252}_{98}$Cf, which decays 96.91% by α emission and 3.09% by SF. One gram of ^{252}Cf emits 2.34×10^{12} fission neutrons per second, but is very expensive. However, microgram amounts are useful as isotopic neutron sources in teaching experiments, and milligram amounts are used in modest-sensitivity neutron activation analysis work, including borehole NAA measurements.

VIII. DECAY SCHEME REPRESENTATIONS

For concise visual representation, the decay path (or paths) of every radionuclide is usually shown by a decay-scheme graph. The decay scheme shows energy, in millions of electron volts, above the ground state of the product nuclide (taken as zero) as the ordinate and atomic number in integral units as the abscissa. A β^- decay is shown as a diagonal arrow terminating one unit in Z to the right of the Z of the radionuclide. A decay by EC or β^+ emission is shown as a diagonal arrow terminating one unit in Z to

the left of the Z of the radionuclide. Decay by α emission is shown by a diagonal arrow terminating two units in Z to the left of the Z of the radionuclide. Gamma-ray transitions are shown by vertical arrows going from an excited state of the product nucleus to the ground state, or to a lower excited state. In branched decays, the percentage of transitions following a given decay path is shown. Some decay schemes (i.e., those decaying purely by α, β^-, or β^+ emission, or by EC or IT by a single γ transition) are very simple. Others are more complicated, and some are very complicated. Usually included in each decay scheme is the Q value (Q_{β^-}, Q_{EC}, Q_α, etc.) for the transition of the radionuclide to the ground state of the product nuclide via that mode of decay.

IX. MEASUREMENT OF RADIOACTIVITY

Although a detailed discussion of radioactivity counting techniques is beyond the scope of this article, a number of the historically important or currently widely employed techniques are briefly presented here.

As mentioned earlier, radioactivity was discovered by means of the effect of the emitted radiations on photographic film. Film is still used extensively today for film badges (discussed in Section X), for γ radiography, and for β-particle autoradiography. In early work, the rate of discharge of a gold-leaf electroscope by such radiations was used for rough quantitation. A modified type of electroscope is still used today for pocket dosimeters (discussed in Section X). Electroscopes and pocket dosimeters operate on the basis of ionization of air by α and β particles, or by Compton electrons generated by γ radiation. The spinthariscope was an interesting early counting device in which the impact of individual α particles on a fluorescent screen could be observed by the eye as flashes of light in a darkened tube. Cloud chambers were used considerably to visualize the paths of α and β^- particles in air supersaturated with water vapor.

In modern studies of radionuclides, various counting devices are used—some originally developed many decades ago, some developed within the past two or three decades. These counting devices may be conveniently classified and discussed according to whether the detection medium is gaseous, liquid, or solid, and are so discussed in the following.

A. Gas-Filled Detectors

Gas-filled detectors include ionization chambers, gas proportional counters, and Geiger–Müller (GM) counters. Basically, each of these typically consists of a cylindrical chamber with an axial central electrode, filled with a suitable gas. In principle, a given detector can be operated in each of these three detection modes by choosing the appropriate applied voltage. Operation as an ionization chamber involves use of an applied voltage that is large enough to collect all of the ion pairs (positive ion and removed electron) produced in the gas by a radioactive source, but not large enough to cause any gas amplification. In a given measurement, the ionization current can be most sensitively measured by an attached vibrating-reed electrometer operating in the rate-of-charge mode or, for larger ion currents, in the calibrated-resistor voltage drop mode. At higher applied voltages, gas amplification sets in, increasing the number of ion pairs collected per detected particle by a sizable amplification factor. This corresponds to operation as a gas proportional counter, capable of distinguishing between α particles and β particles, and operation at high counting rates with very little dead time loss of counts. In the proportional mode, the size of each output electrical pulse is directly proportional to the amount of energy dissipated in the gas of the detector. At still higher applied voltages (e.g., 1000–2000 V), the detector operates as a GM counter. Now each electrical output pulse is much larger than those in the proportional region and is no longer related to the energy of the detected α or β particle. Geiger–Müller counters, because of the detailed nature of the avalanche of ion pairs produced in a single counting event, have a dead time (usually in the range of a few hundred microseconds) following each interaction, which limits them to lower counting rates before dead time losses of counts become severe. For example, with a GM counter having a dead time of 300 μsec per pulse and a sample giving an observed counting rate of 20,000 counts per minute (cpm), 10% of the possible counts have already been lost because of the detector dead time period after each recorded count. With a gas proportional counter having a much shorter dead time period per pulse (e.g., 3 μsec), a 10% loss of counts is not reached until an observed counting rate of 2×10^6 cpm.

Ionization chambers, gas proportional counters, and GM counters can all be used to measure the radioactivity of radioactive gases (e.g., CO_2 containing some $^{14}CO_2$) by placing the gaseous sample inside the detector or flowing it steadily through the detector. In the two that operate as pulse counters (rather than ionization current measurement), the gaseous sample usually must be mixed with a suitable counting gas. When solid samples of α or β emitters are to be counted, the sample is usually placed close to one end of the cylindrical counter. If the counter is a windowless flow counter, there is no window separating the sample from the counter interior, and a counting gas is flowed steadily through the counter. Such a counter is often used for α emitters or radionuclides that emit

very low energy β particles (e.g., the 0.019-MeV E_{max} β^- particles of tritium), since such particles are readily absorbed by all but the thinnest of counter windows. For most β counting of solid samples by gas proportional or GM counters, the sample is separated by a thin window from the counter gas that is sealed inside the counter. Such thin windows, often made of mica or Mylar, absorb the lowest-energy β particles, but allow the more energetic ones to pass into the interior of the detector. Once inside the counter, α and β particles are counted with essentially 100% efficiency. Both α and β particles lose an average of about 35 eV of kinetic energy per ion pair produced in a gas, the exact value depending on the particular gas.

Besides their use in research and radiotracer studies, all three of these kinds of gas-filled detectors are used as safety monitoring instruments (discussed later). For such uses, a battery-operated portable instrument is usually employed. The corresponding research instruments, however, are usually ac-operated, not readily portable, have a lead shield around the detector (to reduce the counting rate due to background gamma radiation), and have more complicated electronics (e.g., a stable high-voltage supply, a pulse amplifier, and either a scaler or ratemeter).

B. Liquid-Filled Detectors

A liquid-filled detector, namely, a liquid scintillation detector, is presently the most widely used kind of detector for the counting of β^- emitters, particularly the widely used radionuclides ^{3}H and ^{14}C. With this type of detector, the sample to be counted (usually a small amount of solid or liquid) is either dissolved in or suspended in a suitable liquid scintillation fluor solution. Thus the counting geometry is 100%, and the problem of β-particle self-absorption within the sample is either eliminated or greatly reduced. The scintillator solution is (typically) 10 ml of an aromatic hydrocarbon such as toluene, containing a small concentration of a primary fluor such as diphenyloxazole (PPO) and an even smaller concentration of a secondary fluor, such as POPOP. Each β^- particle emitted in the solution by the sample excites many solvent molecules, which promptly excite primary fluor molecules, causing them to emit UV/visible radiation. This radiation is then absorbed by secondary fluor molecules, which reemit visible light of slightly longer wavelength to match the optimum response region of the photocathodes of the two photomultiplier tubes (PMTs) that view the scintillation vial. To reduce the thermionic noise counting rate, two PMTs are used in coincidence, and the vial and PMTs in many commercial instruments are also refrigerated. The PMTs are each connected to a preamplifier, a linear pulse amplifier, and the coincidence circuit. The coincidence output pulses are then fed to one, two, or three scalers, set to include pulses of different size ranges (to allow the simultaneous measurement of two β^- emitters, such as ^{3}H and ^{14}C, and to correct for chemical quenching and color within the fluor solution). Typical ^{3}H and ^{14}C counting efficiencies are, respectively, about 40 and 80%. High counting rates can be tolerated with little dead time loss of counts.

C. Solid Detectors

Solid detectors are mainly of two types: scintillators and semiconductors. Various kinds of scintillation detectors are used for α and β counting: for example, a ZnS(Ag) scintillator for α detection or an organic crystal or plastic scintillator for β detection, in each case optically coupled to a PMT. However, by far the most widely used kind of scintillation detector is the thallium-activated sodium iodide NaI(Tl) scintillation detector. Such detectors are mainly used for γ-ray counting and γ-ray spectrometry. Prior to about 1950, gamma radiation could be detected only with very low counting efficiency (only about 0.1–1% of the γ-ray photons entering the detector interacting to produce counts) because only gas-filled detectors were available (proportional and GM counters). Since γ rays are very penetrating, a more massive solid type of detector is needed. The NaI(Tl) scintillation detector is excellent for this purpose, since very large single crystals of NaI (containing about 0.1% TlI) can be grown, Nal has a fairly high density (3.67 g/cm^3), its iodide component has a fairly high atomic number ($Z = 53$), and its Tl additive makes it an efficient scintillator. Optically coupled to a PMT, a canned cylindrical Nal(Tl) crystal (typically 3×3 in. in size) is widely used as a γ-ray detector. Such a detector gives γ-ray detection efficiencies in the range of about 50–100% (of the γ photons entering the crystal) for γ-rays in the usual energy range, about 0.1–3 MeV, being most efficient for the lower-energy ones. Of prime importance for its use in γ-ray spectrometry, the NaI(Tl) scintillation detector is a solid-phase proportional detector; that is, the size of each output electrical pulse is directly proportional to the amount of energy given to the crystal by an interacting γ-ray photon. The crystal converts the absorbed γ-ray energy of each photon to Tl^+ fluorescence radiation (with about a 10% energy conversion efficiency), the fluorescence photons eject photoelectrons from the PMT photocathode into the interior of the PMT, and the dynodes (usually 10) of the PMT amplify the number of electrons by secondary emission (giving an amplification factor of perhaps 10^4–10^5, depending on the voltage applied to the dynodes). Gamma-ray photons initially interact with the crystal by photoelectric absorption (low-energy gammas).

Compton scattering (medium-energy gammas), and pair production (high-energy gammas), and pair production (high-energy gammas). With such large detectors, multiple interactions are increased, so even a γ-ray photon that interacts initially by Compton scattering may be totally absorbed by photoelectric absorption in a second or third interaction of the Compton-scattered photon. Thus, the NaI(Tl) detector also provides detection of γ rays with high photofractions [i.e., a large fraction of the counts being ones of total absorption, and hence falling in the observed pulse-height spectrum of the multichannel pulse-height analyzer (PHA), in the photopeak]. By proper calibration, the channel number of each observed photopeak gives the energy of the γ-ray photons that cause the observed peak. For the 3×3-in. Nal(Tl) detector, photofractions in the range of about 0.3 to almost 1.0 result (highest photofractions at the lower γ-ray energies).

The Nal(Tl) scintillation detector is the most widely used counter for simple counting of γ rays. This detector was also used extensively (mostly between about 1950 and 1970) for γ-ray spectrometry work, such as in instrumental neutron activation analysis studies, but its relatively poor energy resolution has resulted in its being largely replaced in γ-ray spectrometry work by the germanium semiconductor detector. Germanium detectors, of either the lithium-drifted [Ge(Li)] or intrinsic-germanium (Ge) type, provide energy resolutions typically 20- to 30-fold better than a NaI(Tl) scintillation detector; that is, the photopeaks (total absorption peaks) observed in the germanium detector γ-ray pulse-height spectrum of a sample are only about $1/20$ to $1/30$ as broad as the same peaks in the NaI(Tl) pulse-height spectrum of the same sample. In both kinds of detectors the observed photopeaks are roughly Gaussian in shape and are characterized by their respective full widths at half-maximum (FWHM)—a measure of their energy resolution. With both kinds of detectors, the FWHM increases with increasing γ-ray energy, but whereas a 1-MeV photopeak has a FWHM of about 50 keV on a NaI(Tl) detector, it has a FWHM of only about 2 keV on a typical germanium detector. Thus, γ rays fairly close to one another will result in NaI(Tl) photopeaks that overlap with one another, but will exhibit separate photopeaks completely resolved from one another in a germanium pulse-height spectrum. To obtain the maximum degree of energy resolution from germanium detectors, they must (1) be operated at liquid-nitrogen temperature and (2) be coupled to a PHA having a large number of analysis/storage channels—4096 channels (i.e., 2^{12}) being typical. Ge(Li) detectors must be maintained at liquid-nitrogen temperature even when not in use; intrinsic Ge detectors, only when in use. With its much poorer energy resolution, a NaI(Tl) detector γ-ray spectrometer only needs a PHA having 256–512 (i.e., 2^8–2^9) channels.

For analogous X-ray spectrometry measurements, a lithium-drifted silicon [Si(Li)] detector is usually employed for photon energies up to about 40 keV. Up to this energy, the Si(Li) detector exhibits a high detection efficiency for X-ray photons, as well as excellent energy resolution. For energies above about 40 keV its detection efficiency decreases rapidly (because of the low atomic number of silicon, 14), and for the higher-energy X-ray region (40–120 keV) a thin intrinsic Ge detector is preferred. Due to its higher atomic number (32), germanium provides much better detection efficiency, still with good energy resolution. Si(Li) and Ge detectors also must be operated at liquid-nitrogen temperature.

Semiconductor Si(Li), Ge(Li), and Ge detectors operate as solid-state ionization chambers, with the ion pairs (conduction electrons and positive holes) being collected quantitatively at the two electrodes by an applied voltage of a few thousand volts. The energy needed per ion pair formed is only 2.9 eV in germanium and 3.5 eV in silicon, hence their excellent energy resolutions.

The pulse-height spectra of samples emitting X-ray photons and/or γ-ray photons of various energies, measured with appropriate semiconductor [or NaI(Tl) detectors and PHAs, exhibit numerous photopeaks, superimposed on a decreasing (with increasing photon energy) cumulative Compton continuum, the continuum decreasing at each γ-ray Compton edge. Such pulse-height spectra, especially those of high resolution, are of great use in the elucidation of radionuclide decay schemes and in instrumental nuclear activation analysis work.

X. SAFE HANDLING OF RADIOACTIVE MATERIALS

The energetic radiations emitted in the decay of radionuclides cause damage to biological tissues which they impinge on or pass through and hence can be hazardous to humans and other species. Alpha and beta particles, being electrically charged, directly ionize and electronically excite molecules in their path. X-ray and γ-ray photons do so also, but indirectly—via the photoelectrons and Compton electrons generated by their interactions with matter. In general, the amount of biological damage that a given radioactive source can cause in biological tissue exposed to the radiation depends on a number of factors: (1) the type and energy of the radiation, (2) the intensity of the source in disintegrations per second (or curies), (3) the distance from the source, and (4) the duration of the radiation exposure. With proper precautions,

even multicurie radionuclide sources can be handled with safety.

As external sources of ionizing radiation, α emitters are essentially harmless, since α particles have such short ranges in matter that they do not penetrate beyond the outer layers of skin; β emitters that emit β particles of typical energies can produce β particles that can penetrate many millimeters of tissue and damage the tissue; X-ray and γ-ray emitters, producing energetic photons of even much greater penetrability than β particles of the same energy, are the most hazardous as external sources. With physically small sources of all these kinds of ionizing radiation, the intensity (in incident particles per square centimeter per second) falls off essentially as the inverse square of the distance from the source, so distance is a very useful factor for the minimization of radiation exposure. A second useful factor is shielding—interposing an appropriate thickness of a suitable absorber between the source and the body. For α emitters, even a sheet of paper is sufficient to absorb all of the incident α particles. For β^- emitters, a 1- to 2-cm thickness of transparent plastic is sufficient to absorb all of the incident β^- particles (although a lower intensity of bremsstrahlung photons is generated in the process, and these are not absorbed by the plastic). Positron emitters behave like β^- emitters, but produce 0.511-MeV annihilation γ-ray photons, which are not absorbed by the plastic. Sources that emit X-ray and/or γ-ray photons require thicker shielding, of absorbing material with a higher atomic number, to attenuate the radiation by a suitably large factor. For example, even a moderately intense (e.g., millicurie to curie) γ-emitter source may require a 1- to 5-cm thickness of lead. In all cases, minimizing the total period of exposure reduces the total damage to tissue.

As internal sources of ionizing radiation—that is, if radionuclides are ingested—the order of hazard is reversed. Internally, α emitters are the most hazardous, since the energy of the α particles is completely dissipated in a very small volume of tissue, where much damage can result. Beta emitters are intermediate in hazard, since they spread their damage over a larger volume of tissue, but at much lower damage per unit volume. The least hazardous kinds of ionizing radiation, internally, are X-ray and γ-ray photons, since their damage is spread over an even larger volume of tissue at even lower damage per unit volume. From the standpoint of internal hazard, an additional factor is of great importance—the extent to which the ingested radionuclide is retained by the body (and whether or not it tends to localize in certain sensitive organs or tissues). The chemical form in which the radioactive element is ingested is an important aspect. Each radionuclide has its own physical half-life (T or T_{phys}), and each of its chemical forms has a biological half-life (T_{biol}) in a given organ or tissue. These two half-lives may be combined to give the effective half-life (T_{eff}):

$$T_{\text{eff}} = \frac{T_{\text{biol}} T_{\text{phys}}}{T_{\text{biol}} + T_{\text{phys}}}.$$

Three different quantities are used in measuring or assessing the exposure to, or absorption of, ionizing radiation: the roentgen (R), the rad, and the roentgen equivalent man (rem). The roentgen is defined as the quantity of X or γ radiation that generates 1 electrostatic unit of electrical charge (of both signs) in 1 cm^3 of dry air at standard temperature and pressure. This corresponds to an energy dissipation of 87.6 ergs per gram of air. The rad is defined as the absorption of 100 ergs per gram of any material (e.g., biological tissue). The rem takes into account the relative biological effectiveness (RBE) of the particular type and energy of the ionizing radiation: rems = rads × RBE. The RBE of X rays, γ rays, β particles (above 0.03 MeV), and conversion electrons equals 1, but that of α particles equals 10. For a point source of γ radiation, the exposure rate in milliroentgens per hour at a distance d cm is given by the expression:

$$\gamma(\text{mR/hr}) = 5700 \times \gamma(\text{mCi}) \times \gamma(\text{MeV}) \big/ d_{\text{cm}}^2.$$

For persons working regularly with radionuclides, the accepted maximum "tolerance" dose of ionizing radiation is 5 rems per year, whole body. For the general population, the maximum tolerance dose is 0.5 rem per year. The annual dose received from natural background radiation is in the range of about 0.1 to 0.2 rem per year. In a single exposure to a short burst of penetrating radiation, some radiation effects are produced in humans (whole body) at a dose of 25 rems. The effects become increasingly severe at higher doses, reaching a 50% lethal dose at 400 rems.

Persons working regularly with radionuclides usually plan and conduct their work in such a manner that their absorbed radiation doses are far below the tolerance dose of 5 rems per year. To operate with such a safety factor requires (1) careful advance planning and estimation of possible dose rates, (2) optimum use of shielding, distance, and minimization of exposure time, and (3) careful monitoring with suitable radiation monitors. During actual operations, the cumulative dose received is usually observed with a pocket dosimeter and a film badge is worn. Typically, film badges are collected, developed, and the cumulative doses calculated on a monthly basis. As part of the overall safety procedures, all containers of radioactive material must be suitably labeled with radioactivity warning labels, and all radioactive liquid and solid waste must be collected and

disposed of in compliance with applicable governmental regulations.

XI. USES OF RADIONUCLIDES

The uses of radionuclides are many and very extensive. They are discussed briefly here under two broad headings: (1) uses of sealed sources and (2) uses of unsealed radionuclides.

Sealed radioactive sources are used in a variety of devices, for various purposes. Commercially, sealed β^- sources are used in thickness gauges (e.g., to measure the thickness of paper, rubber, or thin sheets of metal, usually on a continuous basis) and as detectors in various instruments, such as gas chromatographs. Sealed γ sources are used on a large scale for the γ radiography of metals (e.g., of welds) and in level gauges. Alpha sources, such as 432-yr $^{241}_{95}$Am, are used extensively in smoke detectors. Larger α sources are used for the elimination of static electrical charge. Multikilocurie γ sources, such as 5.27-yr ^{60}Co sources, are used in many hospitals for radiation therapy, such as radiation destruction of malignant tumors. Such large γ sources are also used extensively for the sterilization of packaged medical instruments and of certain kinds of perishable foods. Sealed ^{252}Cf neutron sources have found various uses in industry. Various sealed β^- and γ sources are used in the laboratory for radiation chemistry studies, in which the chemical effects produced in various solutions by ionizing radiation are studied.

Unsealed radionuclides are also used extensively in scientific studies: in radiotracer studies, radioisotope dilution analysis work, and "hot-atom" chemistry studies. Radionuclides produced in analytical samples by bombardment of the samples with high fluxes of suitable particles (usually thermal neutrons in a research-type nuclear reactor) are the basis of the very sensitive elemental analysis method of nuclear activation analysis. Naturally occurring radionuclides are measured in various age-determination studies, for instance, 12.3-yr ^{3}H in water-dating hydrology studies, 5730-yr ^{14}C in ^{14}C age determination of archeological samples, and various long-lived natural radionuclides in geological age-determination studies (e.g., measuring the ratio of 4.47×10^9-yr $^{238}_{92}$U to stable $^{206}_{82}$Pb in rock samples).

In nuclear medicine, selected radionuclide compounds that tend to localize in certain organs of the body are given to patients internally—in small quantities (up to perhaps a millicurie) for diagnostic purposes and multimillicurie amounts for radiation therapy. Well-known examples are the use of 8.04-day $^{131}_{53}$I in diagnostic studies of the functioning of the thyroid and, with larger doses, therapeutic treatment of thyroid malignancy. Iodine concentrates appreciably in the thyroid, making such procedures effective. Brain tumors are frequently located and visualized by the introduction of compounds of 6.02-hr $^{99m}_{43}$Tc, followed by γ-ray external scans of the head. The half-life of ^{99m}Tc is inconveniently short for shipping, so it is produced and distributed to hospitals in the form of "cows." These are ion-exchange columns containing nuclear reactor-produced 66.0-hr $^{99}_{42}$Mo (which decays by β^- emission to the 6.02-hr ^{99m}Tc). The technetium is "milked" from the "cow," as needed, by chemically eluting the ^{99m}Tc from the column but leaving the ^{99}Mo in place. When a long-lived parent radionuclide decays to a shorter-lived radioactive daughter, a state of radioactive equilibrium is reached after a period of time essentially equal to 10 times the half-life of the daughter product. When radioactive equilibrium is reached, the two disintegration rates become equal ($\lambda_1 N_1 = \lambda_2 N_2$, or $A_1 = A_2$) if $T_1 \gg T_2$, or if $T_1 > T_2$ but not vastly larger, $\lambda_1 N_1 = (\lambda_2 - \lambda_1) N_2$. After elution of the ^{99m}Tc from the column, its activity builds back up to half of its equilibrium value in 6.02 hr (T_2), to three-quarters in 12 hr, to seven-eighths in 18 hr, and so forth, so the column can be repeatedly milked at intervals until the 66.0-hr ^{99}Mo parent activity has decayed to too low a value to be of further use. Another procedure for visualizing tumors is positron emission tomography (PET), which uses a suitable compound of a positron emitter such as 1.83-hr $^{18}_{9}$F. With β^+ emitters, advantage is taken of the fact that the two 0.511-MeV γ-ray positron annihilation photons produced by each β^+ are emitted in opposite directions (i.e., 180° to one another). These are only two examples of the many applications of radionuclides in the field of nuclear medicine.

One use of radionuclides that is of great scientific importance is that of radiotracers. Radiotracers have produced invaluable information in such fields as chemistry, biology, and metallurgy. For example, the complex process of photosynthesis was essentially completely elucidated by use of the appropriate compounds involved in the various steps of photosynthesis, labeled with ^{14}C, ^{3}H, ^{32}P, and ^{35}S.

In radiotracer applications, the specific activity of the radionuclide used (or of its labeled compound) is often a matter of importance. Specific activity is defined as the amount of radioactivity (in appropriate units such as disintegrations per second, millicuries, or curies) per unit amount of the element or compound (in units such as milligrams, grams, millimoles, or moles). The specific activity of a pure radionuclide is readily calculated from the basic equation of radioactive decay: $A = \lambda N^* = 0.69315 N^*/T$. Thus, for example, the specific activity of pure $^{32}_{15}$P, which has a half-life of 14.3 days, may be calculated, in disintegrations per second per

mole of ^{32}P, as $0.69315 \times 6.02 \times 10^{23}/14.3 \times 24 \times 3600$, or 3.38×10^{17} dis/sec/mole of ^{32}P (or 9.13×10^6 Ci/mole or 2.85×10^5 Ci/g). Radionuclides produced by neutron activation, via the (n, γ) reaction, generally have relatively low specific activities, since the radionuclide product is greatly diluted by the target stable nuclide (in the case of ^{32}P produced by unreacted stable ^{31}P, thus lowering the ^{32}P specific activity per gram of phosphorus). Radionuclides formed by transmutation reactions, in which there is a change in atomic number, are produced in a carrier-free state, that is, as the pure radionuclide undiluted by the stable element. Thus, if $^{18}_{9}$F is produced in a cyclotron by the $^{18}_{8}$O(p, n)$^{18}_{9}$F, reaction, the ^{18}F produced is pure, carrier-free ^{18}F, undiluted by stable fluorine (which is entirely ^{19}F). Similarly, in the technetium example discussed earlier, the $^{99m}_{43}$Tc formed by the β^- decay of the $^{99}_{42}$Mo parent is entirely $^{99m}_{43}$Tc, although its decay builds up the amount of its long-lived daughter 2.13×10^5-years ^{99}Tc. Fission-product radionuclides are formed with very high specific activities, but not completely carrier-free. Some applications of radionuclides as radiotracers require the use of high-specific-activity radionuclides, whereas many other applications do not.

SEE ALSO THE FOLLOWING ARTICLES

ACTINIDE ELEMENTS • DOSIMETRY • HEALTH PHYSICS • ISOTOPES, SEPARATION AND APPLICATIONS • KINETICS (CHEMISTRY) • NUCLEAR CHEMISTRY • NUCLEAR FUEL CYCLES • NUCLEAR PHYSICS • NUCLEAR RADIATION DETECTION DEVICES • PROTON DECAY • RADIONUCLIDE IMAGING TECHNIQUES • URANIUM

BIBLIOGRAPHY

Friedlander, G., Kennedy, J. W., Macias, E. S., and Miller, J. M. (1981). "Nuclear and Radiochemistry," 3rd ed., Wiley, New York.

Lederer, C. M., and Shirley, V. S. (eds.) (1978). "Table of Isotopes," 7th ed., Wiley, New York.

Shleien, B., and Terpilak, M. S. (eds.) (1984). "The Health Physics and Radiological Health Handbook," Nuclear Lectern Associates, Olney, MD.

Walker, F. W., Miller, D. G., and Feiner, F. (1983). "Chart of the Nuclides," 13th ed., General Electric Company, San Jose, CA.

Wang, C. H., Willis, D. L., and Loveland, W. D. (1975). "Radiotracer Methodology in the Biological, Environmental, and Physical Sciences," Prentice-Hall, Englewood Cliffs, NJ.

Space Nuclear Power

Gary L. Bennett
Consultant, Emmett, Idaho

I. Characteristics and Uses of Space Nuclear Power Sources
II. Use of Radioisotope Power Sources in Space
III. Use of Nuclear Reactor Power Sources in Space
IV. Possible Future Uses of Nuclear Power Sources in Space

GLOSSARY

Converter or conversion system A device which transforms the heat from a nuclear device (e.g., radioisotope heat source or nuclear reactor) into electrical power. The conversion may be achieved by "static" means (i.e., having no moving parts as in thermoelectric elements) or by "dynamic" means (i.e., having moving parts as in turbine-alternator or linear-alternator systems).

Fission The splitting of a heavy nucleus into two approximately equal parts (which are nuclei of lighter elements), accompanied by the release of a relatively large amount of energy and generally one or more neutrons. If these neutrons are in turn absorbed and cause additional fissions this is termed a chain reaction. Fission can occur spontaneously, but usually is caused by nuclear absorption of gamma rays, neutrons, or other particles.

Isotope One of two or more atoms with the same number of protons but different numbers of neutrons.

Nuclear reactor A device in which a fission process can be initiated, maintained, and controlled. In a nuclear electric power plant, heat produced by the nuclear reactor is used to produce electricity by means of a conversion system.

Radioisotope A radioactive isotope. An unstable isotope of an element that decays or disintegrates spontaneously, emitting radiation. More than 2000 natural and artificial radioisotopes have been identified.

Radioisotope Thermoelectric Generator (RTG) A device which produces electrical power directly from the natural decay of a radioisotope through the use of thermoelectric elements.

Thermoelectricity The production of electrical power through the use of thermocouples (usually called "thermoelectric elements") which are devices composed of two different materials joined in a loop with one end heated ("hot end") and one end cooled ("cold end"). As a result of the temperature difference a voltage, or electromotive force, is produced and a current flows from the hot end to the cold end where it can be collected and used to provide power.

SPACE NUCLEAR POWER sources provide electrical power and sometimes thermal power (steady production of

heat) to space systems such as spacecraft and scientific stations on planetary surfaces. These nuclear power sources function by converting the heat generated by nuclear reactions into usable electrical power for space systems. There are two principal types of nuclear power source, radioisotope and reactor, as defined by whether the heat is produced from the radioactive decay of a radioisotope or from the fission process. Nuclear power sources have enabled or enhanced some of the most challenging and exciting space missions yet conducted, including missions such as the Pioneer flights to Jupiter, Saturn, and beyond; the Voyager flights to Jupiter, Saturn, Uranus, Neptune, and beyond; the Apollo lunar surface experiments; the Viking Lander studies of Mars; the Ulysses mission to study the polar regions of the Sun; the Galileo mission to orbit Jupiter and the Cassini mission to orbit Saturn. While most spacecraft have used non-nuclear power sources (typically arrays of solar cells and batteries), nuclear power is particularly attractive for long-duration missions involving very little sunlight or operating in hostile environments. Since 1961, the United States has successfully flown 40 radioisotope thermoelectric generators (RTGs) and one reactor to provide power for 23 space systems. The former Soviet Union has reportedly flown at least 35 nuclear reactors and at least two RTGs to power 37 space systems.

I. CHARACTERISTICS AND USES OF SPACE NUCLEAR POWER SOURCES

This section will describe the general characteristics and uses of the two principal types of space nuclear power sources: radioisotope and nuclear reactor. The early U.S. nuclear power sources were designated by a number preceded by the acronym "SNAP" which stood for Systems for Nuclear Auxiliary Power. An odd number meant the SNAP unit used a radioisotope heat source while an even number meant the SNAP unit used a nuclear reactor to produce the heat. Today U.S. space nuclear power sources carry their own special names and not the SNAP designation.

There are several general characteristics of all good space nuclear power sources. First of all, they must be safe. Next they must be reliable, i.e., they must be able to produce the required power for the duration of the planned mission without failure. Mass and cost are two additional and important criteria. While power sources on Earth are not often constrained by mass or size, in space mass and size are very important because of the cost of launching objects into space.

A. Radioisotope Power Sources

Radioisotope power sources (RPSs) consist of two basic subsystems as shown in Fig. 1: a heat source and a conversion system ("converter"). The converter usually has fins attached enabling it to radiate any heat not used to produce electricity. The heat source contains the radioisotope within layers of material that are designed with safe enclosure as the primary objective. The radioisotope, which is typically referred to as the "fuel," emits radiation. For the RTGs flown by the United States the radioisotope has been some chemical form of plutonium-238 (^{238}Pu or Pu-238). Plutonium-238 decays primarily by the emission of an alpha particle (a helium atom without its electrons). Fortunately, alpha particles cannot travel very far and they are absorbed within the Pu-238 fuel or within the containment materials. The absorption of these alpha particles results in the heating of the absorbing materials.

Plutonium-238 was selected from over 2000 radioisotopes because it has the right combination of long life, high specific power, absence of troublesome gamma-ray emissions, and availability. In particular, radioisotopes with half-lives shorter than 100 days will not last long enough for the typical long-duration space mission while those with half-lives longer than about 100 years will not produce enough thermal power to be practical.

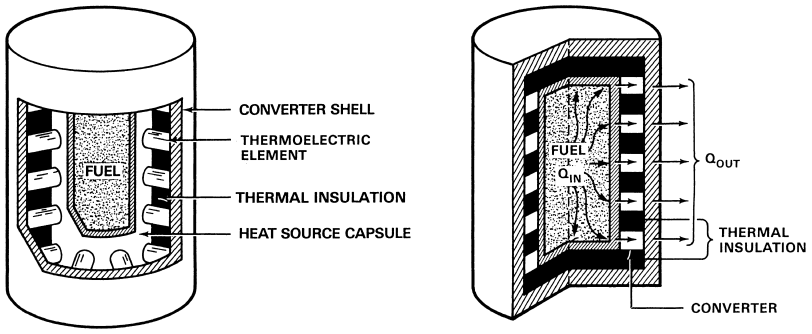

FIGURE 1 Cutaway view of a radioisotope thermoelectric generator and diagram of how an RTG functions. (U.S. Atomic Energy Commission.)

Plutonium-238, with a half-life of 87.8 years, and no troublesome gamma rays is just about right.

The first RTGs used the Pu-238 in a metallic form then the Pu-238 was used in the form of microspheres made of an oxide of Pu-238. As safety requirements evolved the fuel form was changed to a cermet (ceramic-metallic solid), specifically a mixture of plutonium oxide and molybdenum. Beginning with the multi-hundred-watt (MHW) RTG the Pu-238 has been in the form of ceramic plutonium–oxide.

When Pu-238 was chosen over 40 years ago it was available as a byproduct of U.S. nuclear materials production. With the decline in production following the end of the Cold War the United States has had to purchase Pu-238 from Russia and to consider shifting some of its research reactors to the production of Pu-238. The availability and associated Pu-238 costs have sparked a renewed interest in developing an improved conversion system that will not require as much Pu-238.

Much as many terrestrial electrical power plants produce electricity by first producing heat (e.g., burning coal) the heat from the radioisotope is transferred to a conversion system which changes it from thermal power to electrical power. Most terrestrial power plants use some sort of dynamic conversion system such as a turbine-alternator to generate the electrical power. Dynamic conversion systems can achieve efficiencies of 30% or more (meaning that 30% or more of the thermal power is converted into electrical power).

However, for the RPSs flown by the United States the conversion system of choice has been thermoelectric conversion. Thermoelectric technology has its origins in the 1821 discovery by Thomas Johann Seebeck that a voltage, or electromotive force, was produced when two different materials (typically, two dissimilar metal wires) were joined and heated. The use of the thermoelectric effect has been around for a long time primarily in the use of devices called thermocouples used to measure temperature. However, these early thermocouples would not have been very efficient at producing electricity. It took the discovery of radioisotopes in the 20th century and the development of improved thermoelectric materials to make this 19th-century discovery a viable space power source.

The thermoelectric couple or element is composed of two legs as shown in Fig. 2: a positive type leg ("p-leg") and a negative leg ("n-leg"). The positive leg is doped with materials that make it have "holes" (absence of electrons) which act like positive charges. The negative leg is doped with materials that make it have an excess of electrons which are negatively charged particles. When heated the electrons in the n-leg flow away from the hot end while in the p-leg the holes flow away from the hot end. (Conversely, in the p-leg, the electrons flow toward the hot end.) Since the movement of electrons is defined as an electrical current there is now a current being directly produced from the heating of the thermoelectric elements. No moving parts are involved.

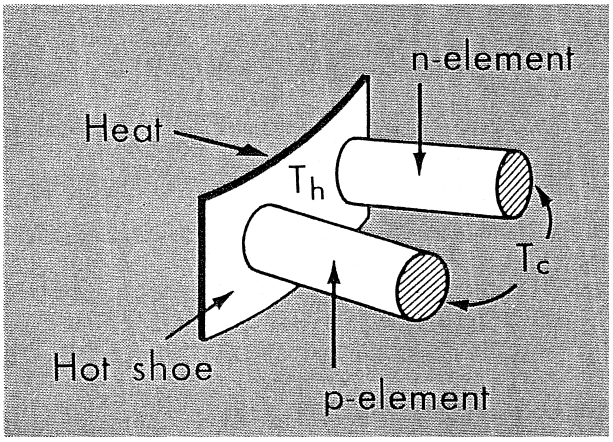

FIGURE 2 Diagram of generic thermoelectric elements. (U.S. Atomic Energy Commission.)

A good thermoelectric material should have a low thermal conductivity and a low electrical resistivity. A low thermal conductivity prevents too much of the heat from moving from the hot end to the cold end without much being converted into electricity. A low electrical resistivity reduces the power losses when some of the electric current is lost as a result of Joule heating. Unfortunately, these two physical properties are often at variance with each other. Finally, the thermoelectric material must be able to produce a high voltage for the difference in temperature between the hot and cold ends. This latter property is referred to as the Seebeck coefficient, named in honor of the discoverer of the thermoelectric effect.

On U.S. space RTGs the hot junction temperatures have ranged from about 670 to 1273 K with efficiencies ranging from around 5 to almost 7%. While these efficiencies seem low it must be remembered that space RTGs have operated for almost 30 years without failures and without any human intervention. As will be shown later in this article the history of the U.S. use of space RTGs has shown them to be highly reliable, very long-lived, and quite robust.

In space power systems a better measurement of performance than efficiency is how much power is produced per unit mass (typically expressed in watts of electrical power per kilogram or We/kg), which is termed "specific power." The current generation of RTGs as used on the Galileo, Ulysses, and Cassini spacecraft can provide over 5.3 We/kg at the time of fueling. For the applications in which they have typically been used this is much much better than any non-nuclear alternative.

A higher efficiency alternative conversion system is dynamic conversion. Two types have been studied in the

United States: turbine-alternators and linear alternators. Turbine-alternators are similar to the conversion systems used in terrestrial fossil and nuclear power plants and in hydroelectric power generation. In a turbine-alternator a working fluid (gas or liquid) is heated and used to drive a turbine which in turn drives an electric generator. If gas is used the conversion system is referred to as a Brayton conversion system and if a liquid is vaporized and later condensed the conversion system is referred to as a Rankine conversion system. In both cases the working fluid is pumped back to the heat source to continue the cycle.

If a piston is moved through the heating of a gas the cycle is referred to as the Stirling cycle. In principle all three dynamic conversion technologies offer the possibilities of high efficiencies (in some cases 30% or more) and high specific powers, particularly at higher powers. The United States has conducted successful experimental studies of all three dynamic conversion systems but the power requirements for space radioisotope power sources have not yet been high enough to commit to development and flight. However, a new interest in the United States in reducing the amount of costly Pu-238 that must be used may make the higher efficiency dynamic conversion systems attractive even at the low powers (typically a kilowatt or less) normally associated with RTGs. Breakthroughs in micromachining allow the development of very small dynamic conversion systems.

B. Space Nuclear Reactor Power Sources

Typically a space nuclear reactor power plant consists of three major subsystems: (1) a compact nuclear reactor that generates a steady rate of heat from the fissioning of the fuel, (2) a conversion system that transforms some of the heat into electrical energy, and (3) a radiator that removes any of the heat that cannot be used. All of the nuclear reactors that have been flown have used an isotope of uranium (^{235}U or U-235) as the fuel. In addition all of the reactors that have been flown have used a heat-transfer fluid ("working fluid") to convey the heat from one part of the power plant to another. Typically, this has been a metal such as an alloy of sodium and potassium that is liquid at the operating temperatures of the power plant. Liquid–metal coolants have excellent heat transport capabilities and allow for growth in the power. Figure 3 shows diagrammatically the basic features of a space nuclear reactor power plant.

Reactor heat sources can come in a number of forms such as thermal, epithermal, and fast reactors with different heat transfer systems. The terms "thermal," "epithermal," and "fast" refer to the energies of the neutrons used in the fissioning process. Thermal reactors typically have neutron energies of around 0.025 eV or neutron speeds of about 2200 m/sec. Epithermal neutrons have energies greater than thermal neutrons but less than fast neutrons. Generally designers take epithermal to mean the energy is between about 0.5 and 100 keV. Fast neutrons are those with energies greater than about 100 keV.

Thermal reactors use moderating materials ("moderators") to slow down ("thermalize") the fast neutrons released in the fission process. The probability of fissioning a U-235 nucleus is higher for thermal neutrons than for epithermal or fast neutrons. This means that, in general, a thermal reactor will require less U-235. Most terrestrial

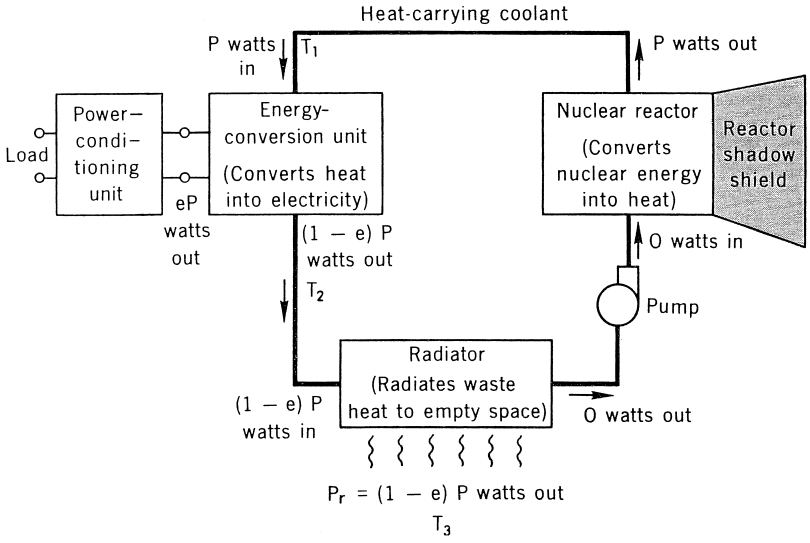

FIGURE 3 Diagram of the basic features of a space nuclear reactor power plant. (U.S. Atomic Energy Commission.)

reactors are thermal reactors. However, the presence of the moderator adds mass and size so that if the planned mission requires a sufficiently high power the lower mass system often turns out to be a fast reactor which does not require a moderator (although it does require more U-235).

Having a large inventory of U-235 may have other advantages in allowing the designer to overcome fuel burnup and reactivity decreases during long periods of operation. A compact reactor also means that the radiation shield can be smaller.

Like radioisotope power sources, nuclear reactors can use either static or dynamic conversion systems. To date, all of the space reactors flown, whether by the United States or the former Soviet Union, have used static conversion systems. The one U.S. space reactor used thermoelectric elements as did 33 of the 35 known Soviet reactors. The two exceptions in the former Soviet program were experimental flights of reactors using thermionic conversion.

In thermionic conversion an electric current is produced by heating one surface ("emitter") until electrons are driven off. These electrons jump across a gap and are collected by a second surface termed the "collector" or anode. The mode of operation is similar to that of a vacuum tube. Since there are no moving parts thermionic conversion also qualifies as a static conversion system. On paper thermionic conversion promises higher efficiencies and higher specific powers than thermoelectric conversion but in practice there have been numerous problems (including short lifetimes) that have prevented thermionic conversion from achieving its promise.

C. Space Nuclear Safety

Safety has been the principal controlling factor in the design of U.S. space nuclear power sources. In the case of radioisotope power sources the fuel capsules are designed to contain or immobilize the Pu-238 fuel in the event of postulated accidents such as explosions of the launch vehicle or accidental reentry of the spacecraft. Realistic tests and analyses are conducted to check the safety design features. Furthermore, Pu-238 is now used in a chemical form (a high-fired ceramic) that is resistant to environmental effects such as weathering. The primary source of radiation from Pu-238 is alpha particle emission and alpha particles can be stopped by thin shields. The main objective, then, is to keep the Pu-238 from being released and ingested in a postulated accident.

For nuclear reactors the primary safety objective has been to ensure that the reactor remains subcritical (not operating) during postulated accident conditions. Moreover, U.S. policy requires no operation of the reactor during launch. If the reactor is not operating it cannot produce any radiation. Special safety features are included in the reactor to ensure that it remains subcritical until it has reached its planned operational position and been commanded to turn on. For the one U.S. space reactor flown a series of safety tests and analyses were conducted to check the operability of the various safety features. The U.S. policy is to use reactors only in orbits sufficiently high that the fission product activity will have decayed to almost background levels by the time of reentry. Such orbits have been referred to as "sufficiently high orbits" (SHOs) or "nuclear safe orbits" (NSOs). In practice, this means an orbit high enough to produce of lifetime of 300 years or more. (It should be noted that almost all spacecraft launched into orbit around the Earth will eventually return as their orbits decay under solar and eventual atmospheric pressures.)

A series of safety analysis reports are required to be prepared for any nuclear power source proposed for launch. These reports are reviewed by an independent team of experts who provide their report to the Office of Science and Technology Policy within the White House. The president or his designated representative must approve the launches of every U.S. nuclear power source.

This attention to detail has paid off with all U.S. space nuclear power sources meeting their safety objectives. The United States has had three accidents involving spacecraft carrying RTGs (Transit 5BN-3, Nimbus-B1, and Apollo 13) and in each case the RTGs performed as they were designed to. The Russians have reportedly had two reentries of nuclear reactors (Cosmos 954 and Cosmos 1402) and three reentries of radioisotope systems (Cosmos 300, Cosmos 305, and Mars-96). There may also have been a launch failure in 1969 involving a Russian reactor.

Following the reentry of the reactor-powered Cosmos 954 satellite in 1978 over Canada, the United Nations established working groups to consider whether existing international treaties and other agreements needed to be amended to cover the safe use of nuclear power sources in outer space. In 1992, the United Nations adopted a nonbinding set of principles governing the use of nuclear power sources in outer space. Discussions have continued sporadically at the United Nations.

D. Benefits of Space Nuclear Power Sources

Nuclear power sources are attractive for use in space under a number of conditions:

1. Nuclear power sources can operate for long periods of time (decades) making them the only current alternative to solar power for long lifetimes. Unlike photovoltaic power sources, reactors can be operated to maintain a constant power. Radioisotope power sources follow predictable decays in power driven largely by the natural radioactive decay of the Pu-238.

2. Nuclear power sources are less vulnerable to external radiation (e.g., the radiation belts around Jupiter) and to other potentially hostile environments (e.g., meteoroids, Martian dust storms, and extreme temperatures such as those experienced on the lunar surface).
3. Nuclear power sources produce power independently of the Sun; hence, there is no need to take the mission penalties associated with keeping solar arrays constantly pointed at the Sun. Radioisotope power sources offer an advantage in that they can produce power from the moment of assembly thereby allowing system checkouts prior to launch.
4. Nuclear power sources offer a number of important operational benefits, including high reliability and compact sources of power (high specific power). In their competitive regimes of operation nuclear power sources have small exposed areas which can reduce the overall size of the spacecraft, simplify attitude control, and reduce structural interactions.

Nuclear power sources can be used to provide power for the same range of space systems as solar power; for example, spacecraft operations, planetary rovers, stationary scientific stations on planetary surfaces, and electric propulsion on spacecraft. Nuclear power becomes very attractive in the outer Solar System and beyond where there is too little sunlight for the practical use of solar power. Nuclear power, in particular nuclear reactors, permits the use of electric propulsion, which is a high efficiency means of moving spacecraft (with humans or without humans) around the Solar System.

The choice of nuclear power or non-nuclear power should not be seen as an either–or choice. Spacecraft have used solar power, batteries, and nuclear power with each contributing to the total power generated.

II. USE OF RADIOISOTOPE POWER SOURCES IN SPACE

The United States began development of radioisotope power sources in the 1950s with a view toward their eventual use in space. While the first SNAP unit employed a Rankine turbine-alternator conversion system the low power requirements of the early U.S. spacecraft helped drive radioisotope power sources to use the lower efficiency thermoelectric elements. Even so, there has been a steady improvement in the performance of RTGs, particularly in terms of specific power. The earlier RTGs used thermoelectric elements based on materials that included telluride alloys (typically lead–telluride alloys) while the more recent RTGs have used an alloy of silicon–germanium in the thermoelectric elements.

As a rough rule, the telluride-based thermoelectric elements provide better performance at lower temperatures (~900 K or less) while the silicon–germanium thermoelectric elements reach their potential at around 1300 K. A higher hot-side temperature allows the cold-side temperature to be raised thereby improving heat rejection (e.g., smaller fins) which in turn improves the specific power of the RTG.

Generally, the telluride-based thermoelectric elements required a cover gas (often a mixture of argon and helium) to minimize sublimation of the material at the operating temperatures while the silicon–germanium thermoelectric elements do not require a cover gas in space. (On the ground a cover gas of argon or xenon is used to keep atmospheric oxygen away from the inside of the RTG.)

With the exception of the Transit RTG all of the telluride-based thermoelectric elements were pressed against the heat source to ensure good thermal contact. However, the use of the higher temperature materials in the silicon–germanium elements permitted the use of radiant heat transfer from the heat source to the thermoelectric elements. This helped reduce the mass of the silicon–germanium-based RTGs.

A. The Early RTGs: The Telluride Thermoelectric Elements

The United States first used an RTG on the U.S. Navy navigational satellite Transit 4A, which was launched into an 890- × 1000-km orbit on 29 June 1961 (see Table I). The 2.1-kg RTG, known as SNAP-3B, was designed to provide about 2.7 We of auxiliary power for 5 years (see Fig. 4). The SNAP-3B RTGs were about 12.1 cm in diameter and 14 cm high with a mass of approximately 2.1 kg. Twenty seven spring-loaded, series-connected pairs of lead-telluride thermoelectric elements converted approximately 52.5 Wt of thermal power into 2.7 We. The n-legs were doped with lead iodide and the p-legs were doped with sodium.

Most of the power for Transit 4A came from solar cells; the SNAP-3B RTG was used to power a crystal oscillator used in Doppler-shift tracking (hence the name "auxiliary" in SNAP). Both the SNAP-3B on Transit 4A and the SNAP-3B on the subsequently launched Transit 4B satellite met this lifetime requirement.

The SNAP-3B RTGs came closest to the shape of the "ideal" RTG: a sphere with thermoelectric elements surrounding the radioisotope heat source. A spherical shape reduces the area for heat losses so that if all of the heat could be forced through the thermoelectric elements that would probably produce the highest overall system conversion efficiency. However, in practice, a cylindrical shape has worked better both in fabrication and in integration with the spacecraft.

TABLE I Summary of Space Nuclear Power Sources (NPS) Successfully Launched by the United States

Power Source	Number of NPS	Initial average power/NPS	Spacecraft (mission type)	Launch date (launch site)	Status
SNAP-3B7[a]	1	2.7 We	Transit 4A (navigational)	29 Jun 1961 (ETR)	RTG operated for ~15 yr. Satellite now shut down.
SNAP-3B8	1	2.7 We	Transit 4B (navigational)	15 Nov 1961 (ETR)	RTG operated for 9 yr. Last reported signal in 1971.
SNAP-9A	1	>25.2 We	Transit 5BN-1 (navigational)	28 Sep 1963 (WTR)	RTG operated as planned. Non-RTG electrical problems on satellite caused satellite to fail after 9 months.
SNAP-9A	1	26.8 We	Transit 5BN-2 (navigational)	5 Dec 1963 (WTR)	RTG operated for >6 yr. Satellite lost navigational capability after 1.5 yr.
SNAP-10A	1	>500 We	SNAPSHOT (experimental)	3 Apr 1965 (WTR)	Reactor successfully operated for 43 days until shutdown by electrical component failure on spacecraft.
SNAP-19B3	2	28.2 We	Nimbus III (meteorological)	14 Apr 1969 (WTR)	RTGs operated for >2.5 yr (no data taken after that).
SNAP-27	1	73.6 We	Apollo 12 (lunar)	14 Nov 1969 (KSC)	RTG operated for ~8 yr (station was shut down).
SNAP-27	1	72.5 We	Apollo 14 (lunar)	31 Jan 1971 (KSC)	RTG operated for ~6.5 yr (station was shut down).
SNAP-27	1	74.7 We	Apollo 15 (lunar)	26 Jul 1971 (KSC)	RTG operated for >6 yr (station was shut down).
SNAP-19	4	40.7 We	Pioneer 10 (planetary)	2 Mar 1972 (ETR)	RTGs still operating. Spacecraft successfully operated to Jupiter and is now beyond the orbit of Pluto.
SNAP-27	1	70.9 We	Apollo 16 (lunar)	16 Apr 1972 (KSC)	RTG operated for ~5.5 yr (station was shut down).
Transit-RTG	1	35.6 We	Transit (TRIAD-01-1X) (navigational)	2 Sep 1972 (WTR)	RTG still operating.
SNAP-27	1	75.4 We	Apollo 17 (lunar)	7 Dec 1972 (KSC)	RTG operated for ~5 yr (station was shut down).
SNAP-19	4	39.9 We	Pioneer 11 (planetary)	5 Apr 1973 (ETR)	RTGs still operating. Spacecraft successfully operated to Jupiter and Saturn and is now beyond orbit of Pluto. Science data return essentially terminated in late 1995.
SNAP-19	2	42.3 We	Viking 1 (Mars lander)	20 Aug 1975 (ETR)	RTGs operated for >6 yr (lander was shut down).
SNAP-19	2	43.1 We	Viking 2 (Mars lander)	9 Sep 1975 (ETR)	RTGs operated for >4 yr (relay link was lost).
MHW-RTG	2	153.7 We	LES-8 (communications)	14 Mar 1976 (ETR)	RTGs still operating.
MHW-RTG	2	154.2 We	LES-9 (communications)	14 Mar 1976 (ETR)	RTGs still operating.
MHW-RTG	3	159.2 We	Voyager 2 (planetary)	20 Aug 1977 (ETR)	RTGs still operating. Spacecraft successfully operated to Jupiter, Saturn, Uranus, Neptune, and beyond.
MHW-RTG	3	156.7 We	Voyager 1 (planetary)	5 Sep 1977 (ETR)	RTGs still operating. Spacecraft successfully operated to Jupiter, Saturn, and beyond.
GPHS-RTG	2	287.1 We	Galileo (Jupiter orbiter)	18 Oct 1989 (KSC)	RTGs still operating.
GPHS-RTG	1	~ 282 We	Ulysses (solar orbiter)	6 Oct 1990 (KSC)	RTG still operating.
GPHS-RTG	3	295.7 We	Cassini (Saturn orbiter)	15 Oct 1997 (ETR)	RTGs still operating.

[a] Acronyms: SNAP = Systems for Nuclear Auxiliary Power; MHW-RTG = Multi-Hundred Watt Radioisotope Thermoelectric Generator; GPHS-RTG = General-Purpose Heat Source Radioisotope Thermoelectric Generator; LES = Lincoln Experimental Satellite; RTG = Radioisotope Thermoelectric Generator; ETR = Eastern Test Range; WTR = Western Test Range; KSC = Kennedy Space Center; We = watts of electrical power.

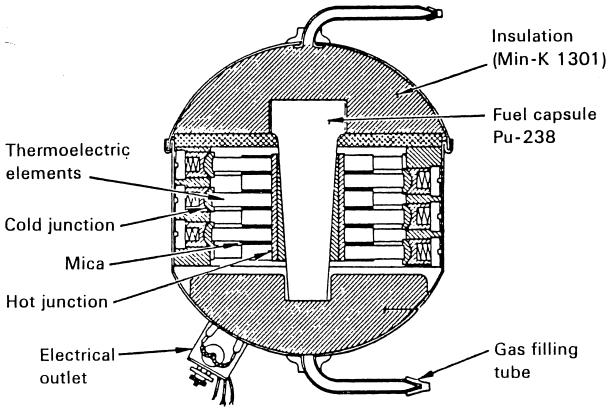

FIGURE 4 Diagram of the SNAP-3B RTG used on Transit 4A and Transit 4B. (U.S. Atomic Energy Commisssion.)

With the successful operation of the SNAP-3B RTGs, the U.S. Navy and Johns Hopkins University Applied Physics Laboratory chose to use a higher power RTG (SNAP-9A) on its Transit 5BN navigational satellites. The SNAP-9A RTGs were designed to provide 25 We for 5 years in space. Unlike the SNAP-3B experiments, the SNAP-9A RTGs were to provide all of the electrical power for the Transit 5BN-1 and Transit 5BN-2 satellites. Seventy pairs of series-connected lead–telluride thermoelectric elements produced the electrical power. The total mass of the SNAP-9A RTG was about 12.3 kg; the height was 26.7 cm, and the diameter from radiator fin tip to radiator fin tip was 50.8 cm. Some of the waste heat from the SNAP-9A RTGs was used to keep electronic instruments warm.

The SNAP-9A technology evolved into the SNAP-19 RTG which NASA selected for use on the Nimbus III meteorology satellite. To provide the 50 We required for Nimbus III the spacecraft carried two SNAP-19 RTGs with each carrying 90 lead–telluride thermoelectric elements that produced about 28 We per RTG at beginning of mission. The Nimbus SNAP-19 RTGs were 26.7 cm high with a fin span of 53.8 cm and a mass of 13.4 kg.

From the Nimbus SNAP-19 program NASA had the confidence to select an upgrade of the SNAP-19 technology to power the Pioneer 10 and Pioneer 11 spacecraft, the first to reach Jupiter and Saturn. The choice of nuclear power was driven by concerns about possible debris in the asteroid belt, the high ionizing radiation fields surrounding Jupiter, the low temperatures at Jupiter ($\sim$130 K), and the 25-fold reduction in sunlight at Jupiter relative to Earth.

Four SNAP-19 RTGs were placed on each of the two Pioneer spacecraft with the average beginning power of each RTG being 40.3 We. This was a definite improvement in performance given that the Pioneer RTG mass and dimensions were similar to those of the Nimbus RTG. For comparison purposes, the Pioneer RTGs had a specific power of 3 We/kg compared to only 2.1 We/kg for the Nimbus RTGs.

All eight Pioneer RTGs easily met the original 2-year design requirement thereby enabling Pioneer 11 to make the first flyby of Saturn and enabling both spacecraft to make the first exploration beyond the orbit of Pluto. Pioneer 11 continued providing data for over 22 years after launch out to over 6.4 billion km from Earth until forced to cease scientific data transmission because a high-voltage relay could no longer be activated. Pioneer 10 continues to send back signals from over 11 billion km from Earth.

Beginning with the Pioneer SNAP-19 RTGs, the composition of the p-leg was changed to one that included a solid solution of silver antimony telluride in germanium telluride with a thin tin telluride segment at the hot side. The n-leg was made of an alloy fabricated by 3M Corporation.

Next, the SNAP-19 design was modified to allow operation on the Martian surface by the addition of a dome reservoir (see Fig. 5). The purpose of this configuration was to permit a controlled interchange of gases between the converter and reservoir to minimize heat-source-operating temperatures up to launch while maximizing electrical power output at the end of the mission. While the added mass of the dome reservoir reduced the specific power of the Viking RTGs the power was increased to an average of 42.7 We at beginning of mission which left these RTGs with a still respectable specific power of 2.8 We/kg.

Two SNAP-19 RTGs were used to power each of the two Viking Landers that operated on the surface of Mars beginning in 1976. All four RTGs met the 90-day mission requirement and they continued to operate for years

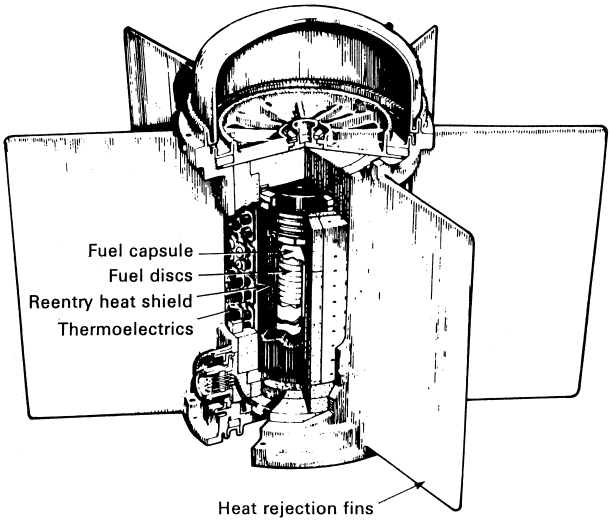

FIGURE 5 Diagram of the SNAP-19 Viking RTG for use on the surface of Mars. (U.S. Energy Research and Development Administration.)

afterward until other factors led to the loss of additional data.

In addition to interplanetary missions, nuclear power sources were used on each of the Apollo landing missions to the Moon. For the Apollo 11 mission, two 15-W radioisotope heater units (RHUs) were used to keep the scientific package warm. RHUs are essentially radioisotope heat sources which are used to produce heat not electricity.

Each of the subsequent Apollo flights carried an RTG, the SNAP-27, which was designed to produce at least 63.5 We during the first year of operation for the scientific packages. All five SNAP-27 RTGs easily met this requirement and continued to operate for years after emplacement on the Moon. Through this performance beyond the original mission requirements the SNAP-27 RTGs enabled the scientific stations to gather long-term scientific data on the internal structure and composition of the Moon, the composition of the lunar atmosphere, the state of the lunar interior, and the genesis of lunar surface features.

The SNAP-27 design took advantage of the presence of astronauts. The heat source was carried separately in a special safety cask. Once on the Moon, the astronauts removed the heat source from its safety cask and placed it in the converter. Each SNAP-27 converter used 442 hermetically sealed lead–telluride thermoelectric elements arranged in two series strings of 221 elements connected in parallel. The converter was 46 cm high and 40.0 cm in diameter (including the fins). The mass of the assembled SNAP-27 RTG with cable and connector was 19.7 kg.

In 1972 the United States launched a variation on the SNAP-19 telluride-based thermoelectric technology on the Transit TRIAD navigational satellite. The Transit RTG was developed to provide the primary power, specifically at least 30 We after 5 years in space. While the Transit RTG heat source was based on the SNAP-19 design, the conversion system consisted of a series of 12 panels with each containing 36 lead–telluride thermoelectric elements that operated in a vacuum instead of with the cover gas used in the SNAP-19 RTGs. The Transit RTG operated well beyond its 5-year requirement, enabling the Navy to perform a number of navigational and scientific experiments.

B. The Later RTGs: The Silicon–Germanium Thermoelectric Elements

The next leap forward in RTG technology came in 1976 with the launch of two U.S. Air Force communications satellites known as LES 8 and LES 9 ("LES" stands for "Lincoln Experimental Satellite"). Each of these two spacecraft carried two RTGs using the new silicon–germanium thermoelectric elements to provide over 150 We at the beginning of mission. Figure 6 illustrates the

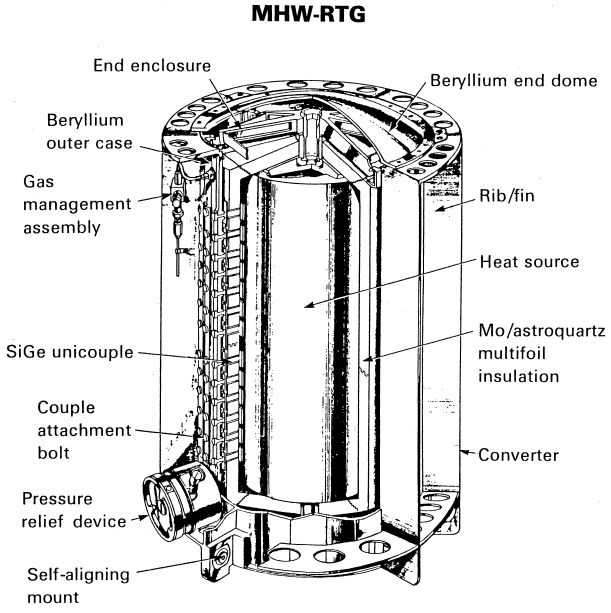

FIGURE 6 Diagram of the Multi-Hundred-Watt Radioisotope Thermoelectric Generator (MHW-RTG) (U.S. Energy Research and Development Administration.)

main features of the multi-hundred-watt (MHW) RTG while Fig. 7 outlines the principal features of the MHW-RTG silicon–germanium thermoelectric element which is called a "unicouple." The design requirement was to provide power for 5 years. The MHW-RTGs are still providing power such that the two LES spacecraft have been used for special purposes on an occasional basis.

The MHW-RTGs were next used on NASA's Voyager 1 and Voyager 2 spacecraft which were launched in 1977 to explore Jupiter and Saturn (see Fig. 8). Each Voyager spacecraft carried three of these 150-We MHW-RTGs which were to provide power for four years after launch. The successful performance of the MHW-RTGs enabled NASA to accomplish a number of bonus missions including the first flybys of Uranus and Neptune and now an extended mission of interstellar exploration.

The overall diameter of the MHW-RTG was 39.7 cm and the length was 58.3 cm. The average MHW-RTG flight masses were 39.69 kg for LES 8/9 and 37.69 for Voyager 1/2. Thus, for Voyager the specific power was about 4.2 We/kg. To a large extent this was achieved because the MHW-RTGs operated at high temperatures (1273 K on the hot junction compared to about 800 K for the SNAP-19 RTGs and 573 K on the cold junction compared to on the order of 450 K for the SNAP-19 RTGs) which enabled a faster removal of heat by thermal radiation.

Figure 9 illustrates the early power performance of the MHW-RTGs on Voyager 1. As in all RTGs, the power decline results from two factors: the natural decay of Pu-238 (which is roughly 0.8% per year) and changes in the

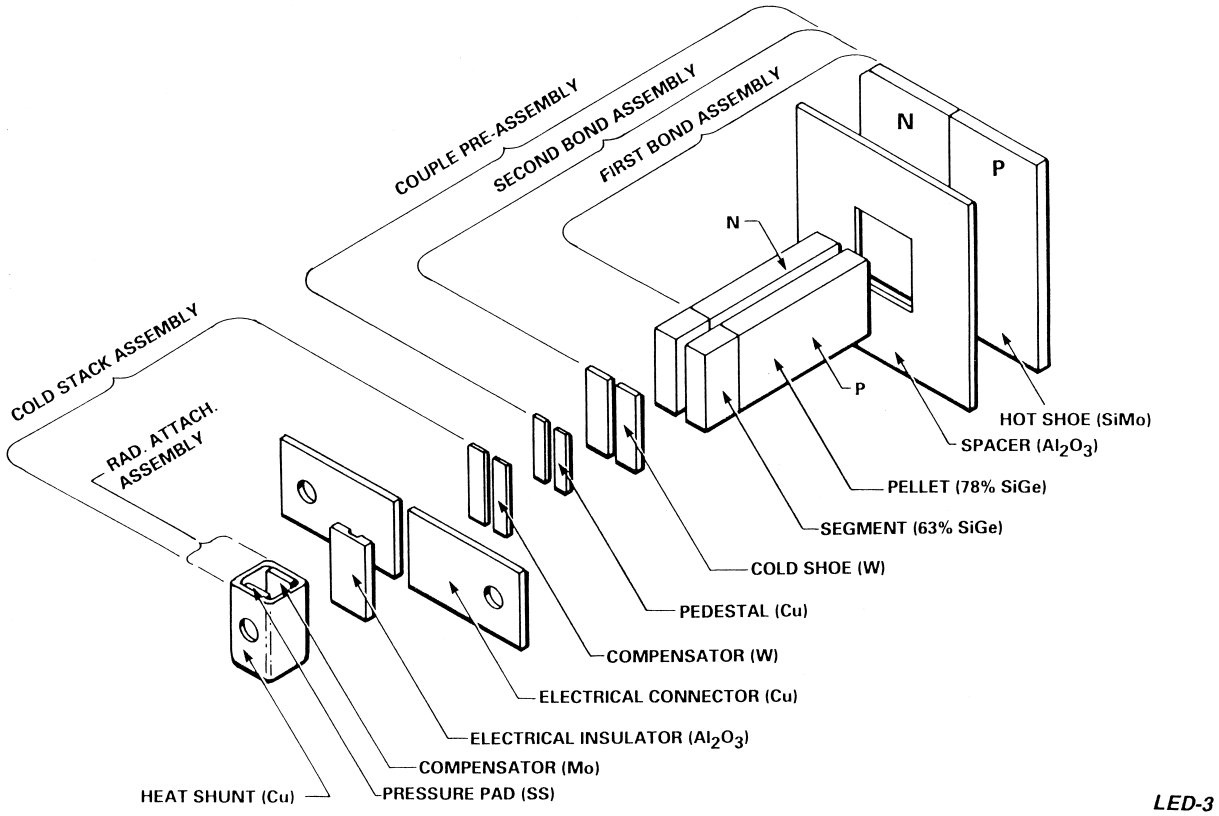

FIGURE 7 Diagram of the MHW-RTG thermoelectric element ("unicouple"). (U.S. Energy Research and Development Administration.)

thermoelectric elements (variously resulting from sublimation of the elements and precipitation of the dopants from the thermoelectrics). Sublimation occurs because the thermoelectric materials are operated near their melting points in order to achieve the highest practical efficiency. Sublimation was of most concern with the telluride-based thermoelectric materials and it was controlled with a cover gas and by packing insulating fibers around

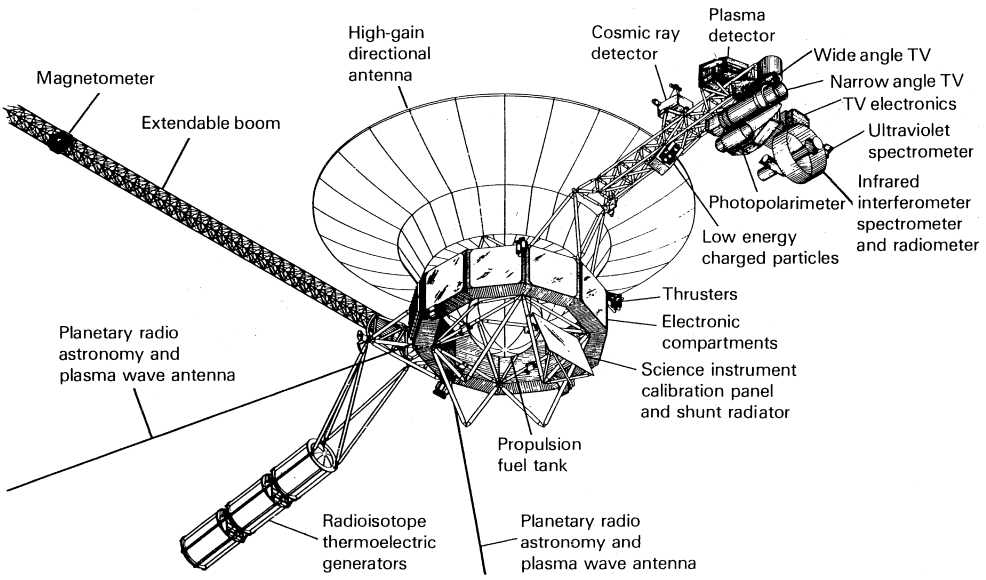

FIGURE 8 Diagram of Voyager spacecraft showing the three MHW-RTGs mounted on a boom. (NASA.)

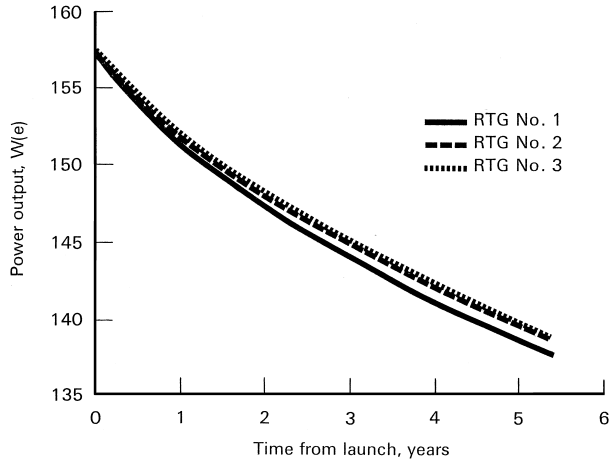

FIGURE 9 Power history of Voyager 1 MHW RTGs. (Smoothed data from Jet Propulsion Laboratory.)

the thermoelectric legs. A silicon nitride coating effectively cured the sublimation in the silicon–germanium unicouples.

The excellent performance of the MHW-RTGs allowed an essential doubling of the MHW-RTG power to 300 We with the larger general-purpose heat source (GPHS) RTG shown in Fig. 10. The heat source for the GPHS-RTG consists of 18 modules each with its own impact and reentry protection. These 18 modules are stacked inside an aluminum housing that contains 572 unicouples of the MHW-RTG design connected in a series-parallel network. Overall diameter of the RTG with fins is 42.2 cm and the length is 114 cm. The mass of the GPHS-RTG is 55.9 kg and it can produce over 300 We at the time of fueling for a specific power of over 5.3 We/kg—over four times that of the first RTGs flown.

Six GPHS-RTGs are currently operating in space: two on the Galileo spacecraft, one on the Ulysses spacecraft and three on the Cassini spacecraft (see Fig. 11). The two GPHS-RTGs on Galileo and Ulysses have performed so well that the two missions were extended by years thereby giving scientists much additional information on the jovian system (Galileo) and the polar regions of the Sun (Ulysses). At this writing, the Cassini spacecraft has successfully passed by Jupiter on its way to orbit Saturn in 2004.

III. USE OF NUCLEAR REACTOR POWER SOURCES IN SPACE

At the same time that the SNAP RTG program was begun in 1955, the United States began a SNAP reactor program to provide higher levels of power for those space systems that might need it. The first space reactor concept, known as SNAP-2, used a Rankine-cycle turbine-alternator conversion system to produce 3 kWe. A sodium–potassium alloy was used to cool the reactor core and to power the turbine-alternator. The total power system mass was 668 kg yielding a specific power of almost 4.5 We/kg which was quite respectable for the time. The uranium-235 fuel was mixed with zirconium hydride which acted as a moderator to slow down ("moderate" or "thermalize") the fission neutrons.

Both U.S. and Russian space reactors have used beryllium as a reflector which is used to scatter neutrons back into the core to ensure the maximum use of neutrons in additional uranium fissioning. (In terrestrial water-cooled reactors this function is accomplished by the water surrounding the core.) Also, both U.S. and Russian space reactors have used shields (termed "shadow shields") at

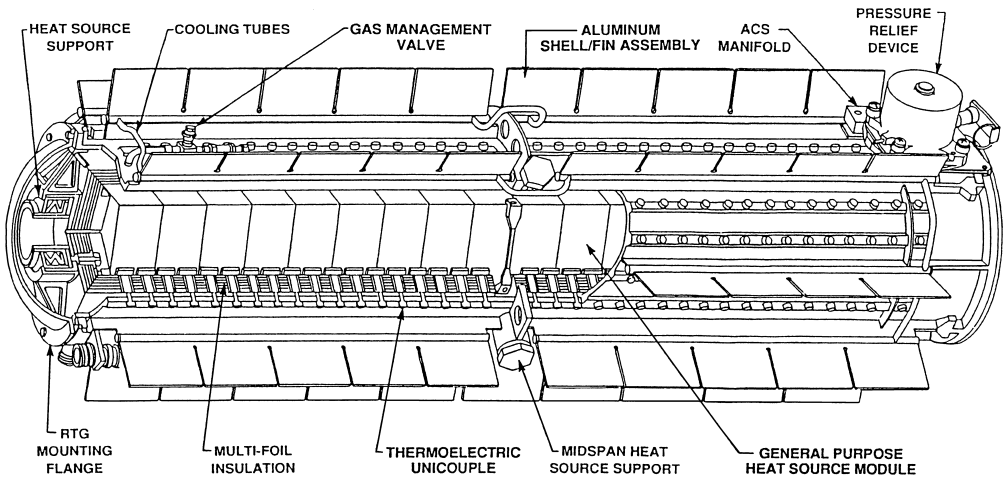

FIGURE 10 Diagram of General-Purpose Heat Source Radioisotope Thermoelectric Generator (GPHS-RTG). (U.S. Department of Energy.)

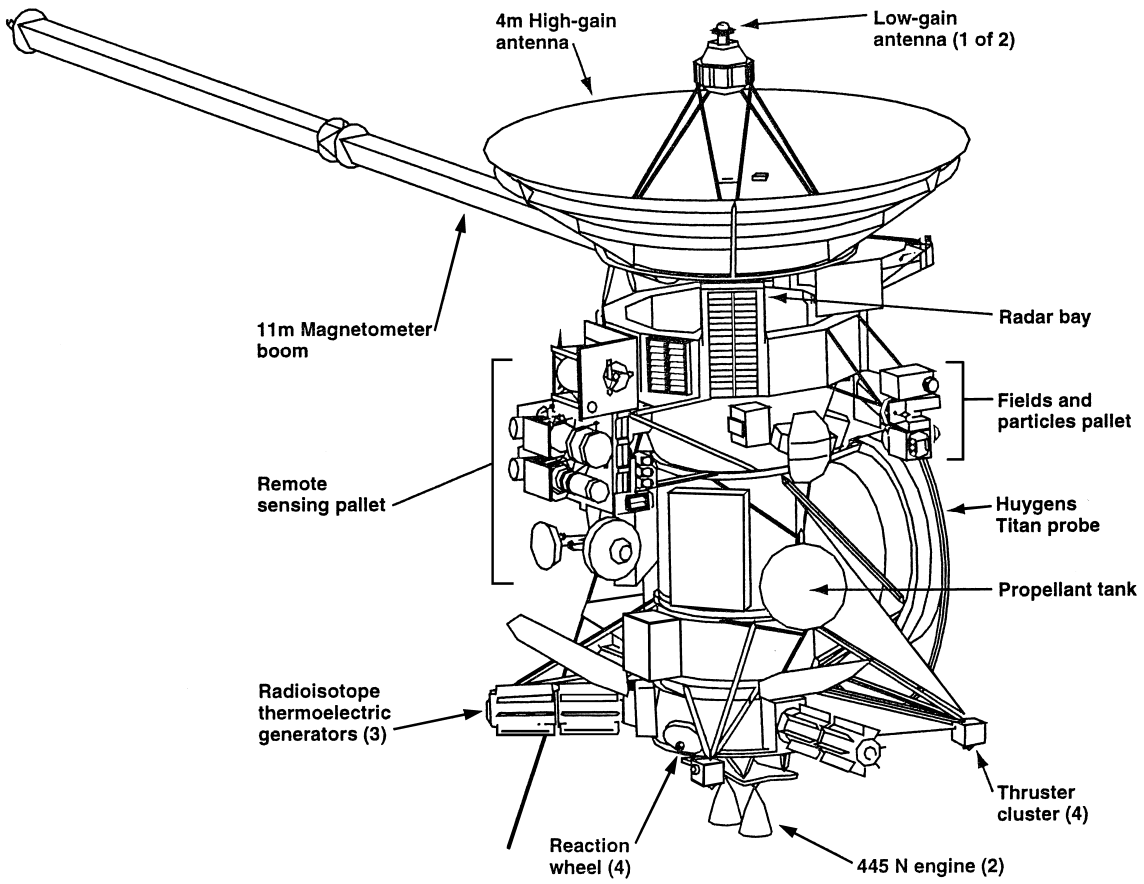

FIGURE 11 Diagram of the GPHS-RTGs on the Cassini spacecraft. (Jet Propulsion Laboratory.)

one end to reduce the radiation exposure of instruments and other equipment carried on the spacecraft. Typically these shadow shields are made of some hydrogen-bearing material such as lithium hydride.

A. The SNAP-10A Flight Experiment

Studies were also undertaken on a small, 300-We conductively coupled thermoelectric reactor termed SNAP-10. Then, in response to a requirement to provide 500 We for a Department of Defense application the convection-cooled SNAP-2 reactor power system was modified to use a thermoelectric conversion system and it was renamed SNAP-10A.

On April 3, 1965, the United States launched the world's first nuclear reactor into a 1300-km, near-circular polar orbit from Vandenberg Air Force Base, CA. The experiment was named "SNAPSHOT." The satellite carried a small ion-propulsion unit and other secondary experiments that were powered by the SNAP-10A reactor.

Included among the objectives of the SNAP-10A flight test program were (1) to demonstrate, proof test, and flight qualify SNAP-10A for subsequent operational use; (2) to demonstrate the adequacy and safety of ground handling and launch procedures; and (3) to demonstrate the adequacy and safety of automatic reactor startup in orbit.

Figure 12 shows a cutaway of the SNAP-10A reactor power system. It has the shape of a truncated cone with an overall length of 3.48 m and a mounting base diameter of 1.27 m. The total system mass of the final flight unit was 435 kg, including the shield. The reactor was to provide not less than 500 We for 1 year. This configuration, which is typical of space reactor designs, was dictated by the requirement to minimize the mass of the lithium–hydride shield that is used to reduce the flux of radiation escaping from the core. Specifically, the designers wanted to eliminate neutron scattering around the shield. The base diameter was established by the Agena launch vehicle payload and the upper diameter was determined by the effective area of the reactor. The length was determined by the total area required for the radiator to remove heat.

The power conversion system basically consisted of 2880 silicon–germanium thermoelectric elements of a different design from those used on the MHW-RTGs and

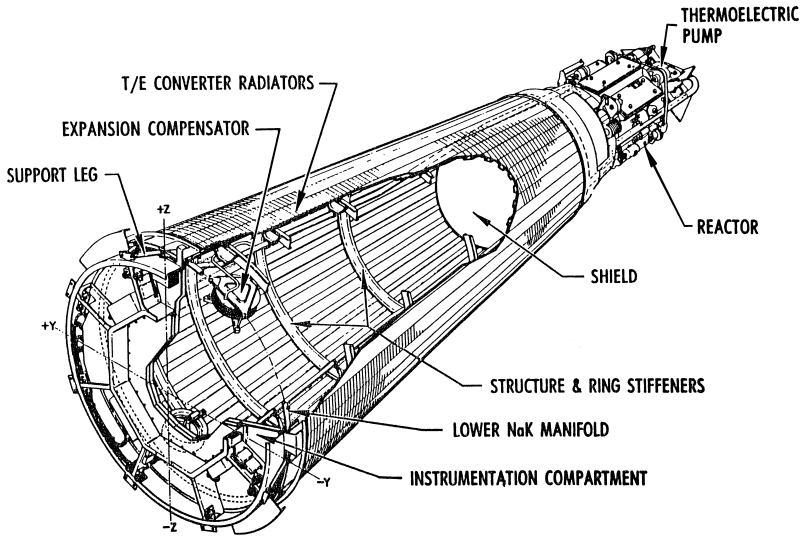

FIGURE 12 Cutaway of the SNAP-10 space nuclear reactor power system. (U.S. Atomic Energy Commission.)

GPHS-RTGs. The thermoelectric elements were mounted in groups of 72 along 40 stainless-steel tubes through which the sodium–potassium liquid–metal alloy coolant flowed. The converter had a hot side operating temperature of about 780 K and the mean radiator temperature was about 610 K. Figure 13 shows the thermodynamic cycle of the SNAP-10A reactor power system.

Once in the planned orbit the automatic startup of SNAP-10A was accomplished flawlessly. The net power output ranged from a transient high of 650 We in the early part of the mission to a low of 527 We in the Sun after 43 days. (In the case of thermoelectric converters solar heating raises the temperature of the cold side which reduces the temperature drop across the elements, in effect, reducing the driving force. All power sources, whether nuclear or non-nuclear, are affected by solar heating.)

On May 16, 1965, after 43 days of successful operation, the reactor was shut down by a spurious command caused by a failure of a voltage regulator on the Agena unregulated bus. There was no evidence of any malfunction in the SNAP-10A system. A ground-test twin to the flight reactor successfully operated for 10,000 hr, thereby

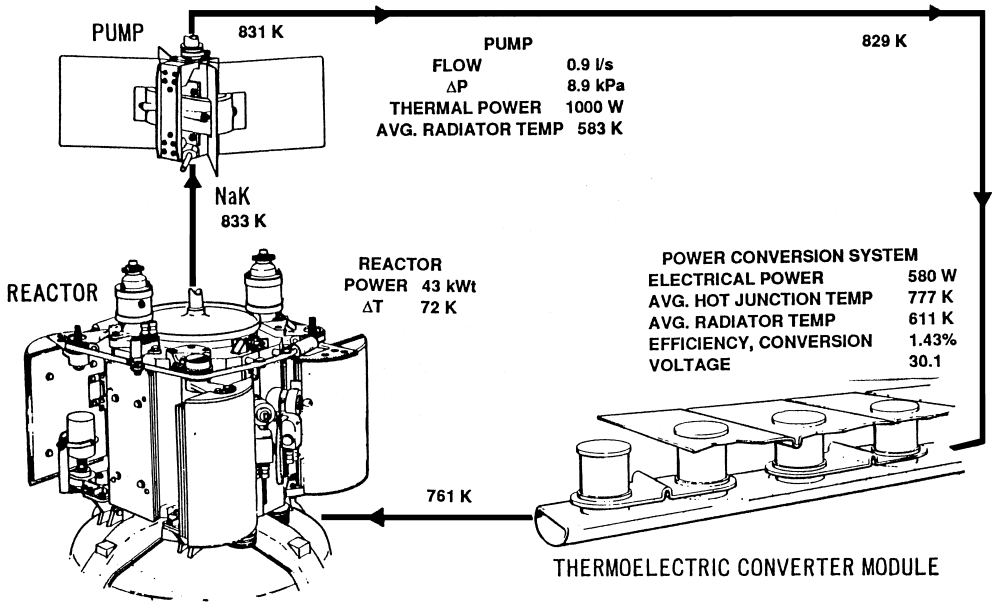

FIGURE 13 Thermodynamic cycle of the SNAP-10A space nuclear reactor power system. (U.S. Atomic Energy Commission.)

demonstrating the capability of SNAP-10A to operate unattended for a year.

The SNAP-10A reactor successfully completed most of its objectives, including the following significant achievements: (1) first application of a nuclear reactor in space, (2) first development of a reactor thermoelectric power system and the first use of such a system in space, (3) first remote automatic startup of a nuclear reactor in space, (4) first application of a high-temperature (~810 K) liquid metal heat transfer system in space and the first application of a high-temperature spacecraft in space, (5) first use of a nuclear reactor shadow shield in space, (6) development and application of the highest powered thermoelectric system to that time and the first use of a thermoelectric power system of that size in space, and (7) first use of a thermoelectric-powered liquid–metal pump in space.

There were other space reactor concepts that the United States studied in the 1960s and early 1970s; however, changes in the national space program in the early 1970s prevented any of these concepts from reaching flight status.

B. The Use of Space Nuclear Reactors by the Former Soviet Union

The former Soviet Union began its own space nuclear reactor program in the 1960s. Their first ground test reactor, known as ROMASHKA, was a conductively coupled thermoelectric system that produced around 460 to 475 We at the beginning of life. It operated continuously for about 15,000 hr beginning on August 14, 1964, and produced about 6100 kWh of electrical energy. Thermoelectric elements composed of a silicon–germanium alloy converted about 40 kWt into electrical power. Instead of the uranium–zirconium-hydride fuel used in SNAP-10A, ROMASHKA carried its 49 kg of U-235 in 11 graphite-encased uranium–dicarbide disks. The reactor core was 0.24 m in diameter and 0.35 m high and the overall mass of the reactor plus converter was 450 kg (not counting the control drives). In many respects ROMASHKA looked like the reactor analog of an RTG in that the heat generated in the core was converted directly to electricity without flowing coolant or rotating machinery.

At about the same time the Russians started development work on what they termed the BUK space nuclear reactor power system (see Fig. 14). BUK is a fast reactor that produces about 3 kWe from 100 kWt of thermal power using two-stage thermoelectric elements with the first stage based on a silicon–germanium alloy. The mass of the BUK space reactor was reported to be 930 kg of which about 30 kg was U-235.

The Russians have said that 31 BUK reactors were successfully used to power spacecraft used for marine radar observations. (The United States termed these spacecraft

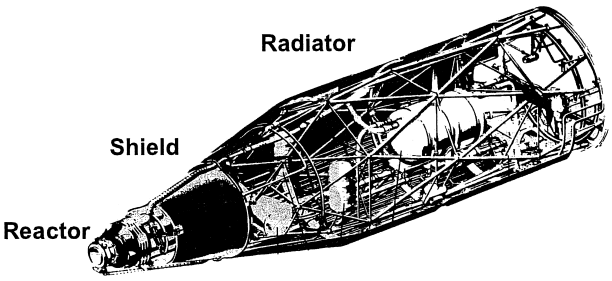

FIGURE 14 General view of the Russian BUK space nuclear reactor power system. (State Enterprise Krasnaya Zvezda and Rasor Associates, Inc.)

RORSATs (for Radar Ocean Reconnaissance SATellites) and claimed they were used to track U.S. Navy ships. Other public sources indicate that as many as 33 BUK reactors may have been launched beginning in December 1967 but some of the first ones apparently did not operate very long or may not have powered RORSATs.) The last known flight of a BUK reactor occurred in 1988.

Since the BUK reactor operated with fast neutrons it did not require the bulky zirconium–hydride moderator of the SNAP-10A design. The reactor fuel was in the form of a uranium–molybdenum alloy (enriched to 90% in U-235) placed in 37 fuel rods. The reactor core heats the sodium–potassium alloy coolant to about 973 K. The coolant was pumped to the thermoelectric generator that was located behind the radiation shield. Over the course of the BUK program, the lifetime was raised to about 4400 hr.

The world became aware of the BUK space reactor on January 24, 1978, when the RORSAT identified as Cosmos 954 reentered the Earth's atmosphere over Canada. A second BUK reactor core reentered over the South Atlantic Ocean on February 7, 1983, and there was a close call with Cosmos 1900 in 1988. While there was public concern expressed about these incidents in practical terms the BUK reactor reentries did not cause any adverse health effects.

The Russians have said that they used two independent safety systems on the BUK reactor. The first was designed to inject what the Russians term the nuclear power unit into a long-term disposal orbit with an altitude of at least 850 km. The orbital lifetime of a shutdown reactor placed in such an orbit is sufficient to permit the fission products to decay to essentially background levels on Earth.

Failing a successful injection into a higher orbit, the second safety system was reportedly designed to cause the reactor fuel to disperse into small particles having sizes too small to pose a serious risk of radiation exposure. Both the Cosmos 954 and Cosmos 1402 reentries showed that this dispersion of the fuel had been achieved.

In 1987, the former Soviet Union launched two nuclear reactors that used thermionic fuel elements to produce the

electrical power for what they termed the Plasma-A experimental spacecraft (Cosmos 1818 and Cosmos 1867). These reactors, known by the Russian acronym TOPAZ, were designed to provide about 5 kWe from a reactor thermal power of about 150 kWt. The overall reactor mass was about 980 kg of which about 11.5 kg was uranium-235. The nuclear power unit had a length of 4.7 m and a maximum diameter of 1.3 m. Both Cosmos 1818 and Cosmos 1867 were placed in circular orbits with altitudes of over 800 km.

The thermionic fuel elements consisted of a molybdenum emitter operating at about 1875 K and a niobium collector operating at less than 900 K. For Cosmos 1818 the emitters were made of single-crystal molybdenum while on Cosmos 1867 the emitters had single-crystal tungsten coatings.

According to Russian reports, the TOPAZ reactor on Cosmos 1818 operated for 142 days while the TOPAZ reactor on Cosmos 1867 operated for 342 days. In both cases the cause of termination was a depletion of the cesium vapor supply used to enhance thermionic performance. Ground tests reportedly demonstrated that TOPAZ was capable of operating for 4400 hr.

Like the United States the Russians also studied other space reactor concepts. One of these, known as ENISEY in Russia and erroneously called TOPAZ 2 in the U.S., used a single-cell thermionic converter. Under a cooperative agreement, a non-nuclear ENISEY system was tested in the United States. At one time there was interest in the United States in test flying ENISEY on a Department of Defense mission. Given the short lifetime of thermionic fuel elements and the different safety requirements in Russia there would have to be modifications before ENISEY (or TOPAZ) could be usefully flown by the United States.

IV. POSSIBLE FUTURE USES OF NUCLEAR POWER SOURCES IN SPACE

Over the years there have been numerous studies in the United States, in Russia, and in other countries regarding future uses of space nuclear power. These studies have shown the decided advantages of space nuclear reactors in providing power for human bases on the Moon and Mars. The Moon is a particular candidate for nuclear power because the lunar nights span over 14 Earth days which can be a strain on energy storage systems that must provide the power when the solar arrays are in the dark. Even though the energy storage requirements are much less severe, a human base on Mars is also a candidate for nuclear power because Mars receives only about 43% of the sunlight received by the Earth.

The attractiveness of nuclear power for human bases comes from the production of large amounts of power in a relatively small package. Since every kilogram launched into space comes at a cost there is an incentive to reduce the mass that must be launched.

Nuclear reactors have also been considered to provide power and propulsion for human transport vehicles to the Moon and Mars and beyond. Both the United States and Russia have conducted ground experiments of nuclear rocket technologies in which the reactor directly heats a propellant (such as hydrogen) which is expelled through a nozzle to produce thrust. But nuclear reactors can also be used to power electric thrusters (such as ion thrusters) that are highly efficient users of propellant. Studies have shown that nuclear electric propulsion is competitive with nuclear rockets in terms of mass and trip times for sending humans to Mars and bringing them back.

From 1983 to 1994 the United States carried out a technology development program to develop the SP-100 space reactor power system. One of the uses envisioned for the SP-100 reactor was to power electric propulsion systems. SP-100 was also considered a candidate to power lunar and Mars bases. Figure 15 shows the system physical configuration of SP-100 and Fig. 16 shows a possible configuration for a spacecraft using a 40-kWe version of the SP-100 reactor to power axially thrusting ion engines on a planetary spacecraft. In Fig. 16 the SP-100 reactor is shown in the upper left and the spacecraft with ion thrusters is shown in the lower right. The boom provides separation between the reactor and the spacecraft to minimize the radiation dose and to minimize the mass of the reactor shield.

The generic flight system configuration shown in Fig. 15 was established to support operational missions requiring relatively high power (100 kWe class) for 10-year mission durations, but scalable from about 10 to 1000 kWe and with high specific power (8 to over 26 We/kg depending upon the conversion system). While the configuration shown was to use thermoelectric elements to produce electrical power the SP-100 design could also accommodate other conversion systems such as the various dynamic conversion systems. The diameter and length of the main body (less the radiator panels) are 3.5 and 6 m, respectively, and the design mass was 4575 kg for the 100-kWe generic flight system. A deployable boom was to be used to maintain a separation distance of 22.5 m between the reactor and the payload plane to keep the neutron and gamma radiation doses within specified values.

By 1993, the SP-100 program had essentially completed most of its nuclear component performance development phase, including validation of the critical technologies and fabrication techniques required to build a space reactor power system. Most of the component development work for the nuclear subsystem (the reactor, reactor

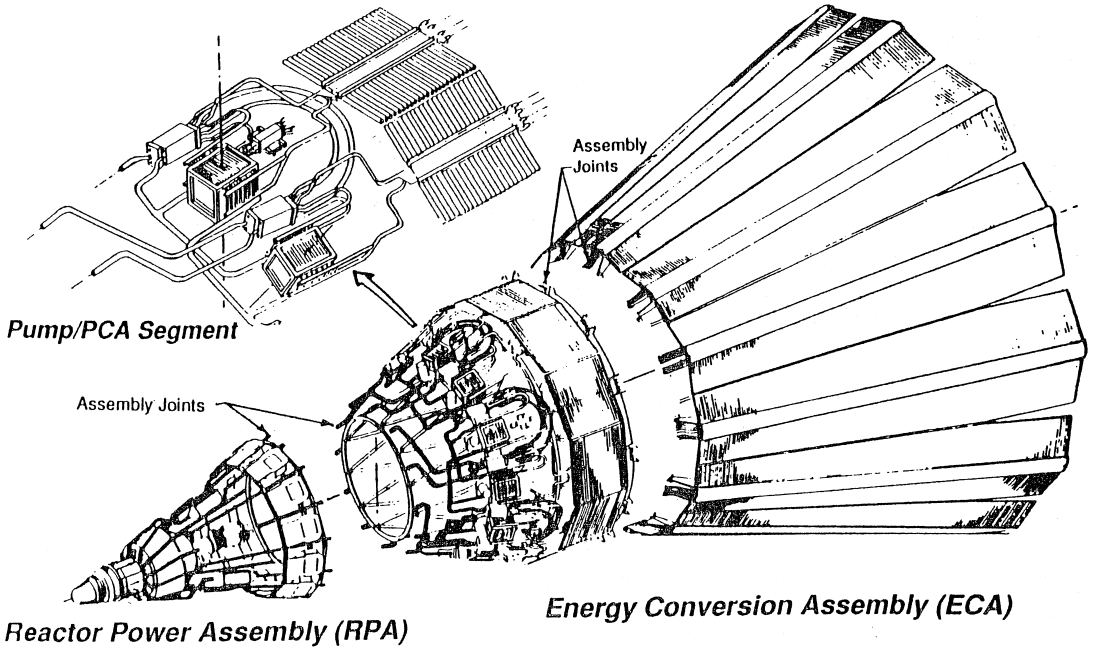

FIGURE 15 System physical configuration of the SP-100 space nuclear reactor power system. (U.S. Department of Energy.)

instrumentation and control, and shield) and space subsystem (the converter, heat transport, and heat rejection) was also completed. Once again changing national priorities led to the termination of a space reactor program.

The United States has continued efforts to improve the efficiency of conversion systems for radioisotope power sources. Most of the recent efforts have been focused on developing something called an alkali metal thermal-to-electric converter (AMTEC) with lesser efforts aimed at developing a small Stirling engine. Uncertainties in planning future space science missions (such as proposed missions to Pluto and close to the Sun as well as various rovers and stations on Mars) have impacted the plans for developing future radioisotope power sources. Clearly there are technologies (such as dynamic conversion) which can reduce the required quantities of Pu-238 by half or more.

Regardless of the type of nuclear power source the physics of outerplanetary operations clearly shows a need for nuclear power for both robotic and human missions. Nuclear power can provide the kind of safe, reliable, compact, robust, long-lived power needed for future space exploration beyond the orbit of Earth.

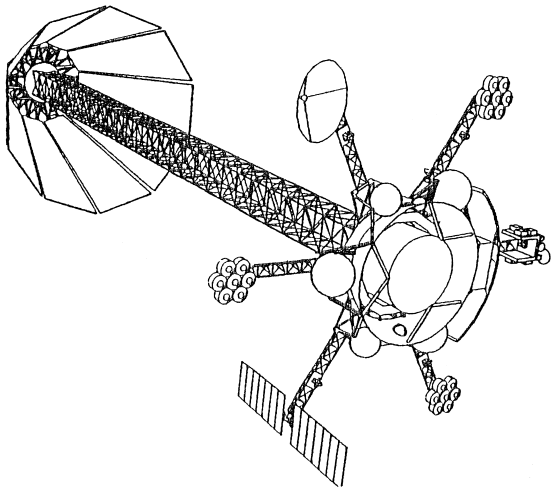

FIGURE 16 Concept of a planetary spacecraft using SP-100 and ion thrusters. (Jet Propulsion Laboratory.)

SEE ALSO THE FOLLOWING ARTICLES

FISSION REACTOR PHYSICS • ISOTOPES, SEPARATION AND APPLICATIONS • NUCLEAR ENERGY, RISK ANALYSIS • NUCLEAR REACTOR MATERIALS AND FUELS • NUCLEAR REACTORS • NUCLEAR REACTOR THEORY • NUCLEAR SAFEGUARDS • SPACECRAFT CHEMICAL PROPULSION • SPACE TRANSPORTATION SYSTEMS, ADVANCED • THERMOELECTRICITY

BIBLIOGRAPHY

Bennett, G. L., and Skrabek, E. A. (1996). Power Performance of U.S. Space Radioisotope Thermoelectric Generators. "Proceedings of the

Fifteenth International Conference on Thermoelectrics," IEEE Catalog Number 96TH8169 and Library of Congress Number 96-75531.

El-Genk, M. S. (ed.) (1984–present). "Proceedings of Space Technology and Applications International Forums" (earlier: "Proceedings of Symposia on Space Nuclear Power and Propulsion"), American Institute of Physics Press, Woodbury, New York.

El-Genk, M. S. (ed.) (1994). "A Critical Review of Space Nuclear Power and Propulsion 1984–1993," American Institute of Physics Press, Woodbury, New York.

Rowe, D. M. (ed.) (1995). "CRC Handbook of Thermoelectrics," CRC Press, Boca Raton, FL.

Stepnoi, N. N., Talyzin, V. M., and Usov, V. A. (2000). Russian space nuclear power and nuclear thermal propulsion systems. *Nuclear News* **43** (13), 33–46.