

Look here on slides for additional details starting at slide 1-14.

Analog Electronic Design

Ron Mancini and Charles Wray
Texas Instruments



1-2

Look here on slides for additional details starting at slide 1-14.

Objective

Teach the non-analog person enough analog theory to enable them to use and understand application notes.



1-3

Analog Design defined by Bob Widlar

When a job comes into the house, if the digital guys can't do it, it's analog.



1-4

Analog Design defined by Ron Mancini

Analog design couples the art and science of electronics into one entity.



Outline

- **Passive devices**
- **Active devices**
- **Circuit equations**
- **Derivation of the ideal op amp equation**
- **Feedback analysis tools**
- **Stability**
- **Voltage feedback op amp compensation**



Outline-continued

- **Current feedback op amp analysis**
- **Circuit board layout**
- **Non-ideal op amp conditions**
- **High speed amplifier applications**
- **Single-supply op amp applications**
- **Converter basics**
- **Converter Applications**
- **Power applications**



Table of Contents

1. **Introduction** 1-1
   - Why are we here
   - What you will learn
   - Review outline
2. **Passive Devices** 2-1
   - Resistors
   - Capacitors
   - Inductors
   - Diodes
3. **Active Devices** 3-1
   - Ideal and first level real models BJT, JFET, MOSFET, VFB op amp, CFB op amp, comparator



4. **Circuit Equations** 4-1
   - Ohm's law
   - Kirchoff's laws
   - Voltage divider rule
   - Current divider rule
   - Thevenin's rule
   - Norton's rule
   - Superposition
5. **Derivation of ideal op amp equation** 5-1
   - Use voltage divider law, Kirchoff's law and Ohm's law
   - Do inverting, non-inverting, differential, grounded component in feedback loop



1-9

6. **Feedback Analysis Tools** 6-1
- Block diagrams
- Bode plots

7. **Stability** 7-1
- Stability equation
- VFB op amp equations
- Second order equations
- Overshoot and stability
- Phase margin
- Oscillation and Oscillators

8. **VFB Op Amp Compensation** 8-1
- Dominant pole
- Feed forward
- Lead/lag
- Compensated attenuator



9. **CFB Op Amp Analysis** 9-1
- Derive the equations
- Stability Analysis

10. **Circuit Board Layout** 10-1
- Ground Plane
- Decoupling capacitors
- Parallel traces
- Faraday shield
- Capacitance
- Differential versus single-ended

11. **Non-Ideal Conditions** 11-1
- Offset voltage
- Error versus frequency
- Common-mode rejection versus frequency
- Output swing-versus frequency, load, and distortion
- Noise



12. **Single-Supply Op Amp Applications** 12-1
- Biasing calculations
- Computer calculations

13. **Circuits High Speed Amplifier Applications** 13-1
- Communications circuits
- Imaging circuits
- Video/multimedia circuits
- Instrumentation circuits

14. **Converter Basics** 14-1
- Digital math
- Basic DAC theory and configurations
- Basic ADC theory and configurations
- Error definitions and curves



1-12

15. **Converter Applications** 15-1
- Communications circuits
- FIFO circuits
- ATS systems circuits
- WLL circuits
- Low frequency applications circuits

16. **Power Applications** 16-1
- LDO circuits
- Power distribution circuits
- DSP power supplies
- DC/DC converters
- Battery management circuits



1-13

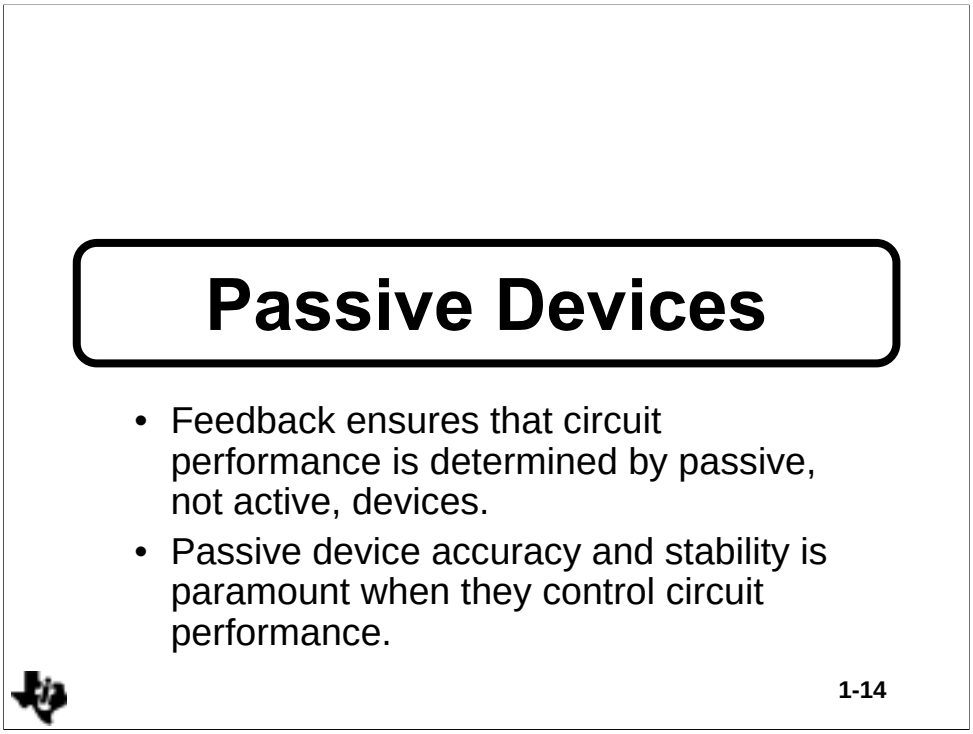

Passive devices are the resistors, capacitors, and inductors required to build electronic hardware, but they always have a gain less than one. Passives can multiply a signal by values less than one, as is shown in section four, but they can't multiply by more than one because of their lack of gain. All the glory goes to the sophisticated high gain amplifiers, but they are useless without the resistors and capacitors which control their gain. Good circuit design practice demands accurate and stable amplifiers, but the active devices are by nature unstable, so they are tamed with passives. Feedback is employed in almost all circuit designs to insure that the circuit performance is a function of the passive rather than the active components.

Passive devices are neglected in the rush to complete the design of an electronic system. Many engineers select passive devices as an after thought; they just pick them from a list of standard components. Although this practice is adequate for some circuits, it does not suffice in the demanding world of high frequency amplifiers, precision sample-holds, data converters, or other demanding circuits. The hardware designer must select adequate passives for demanding applications.

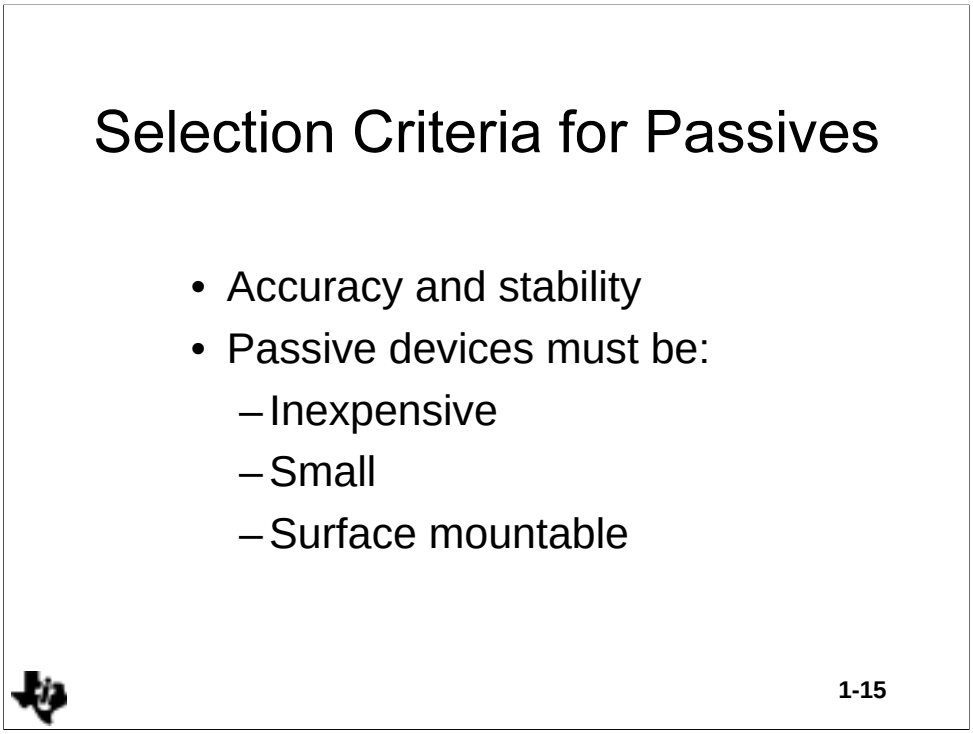

The selection criteria for passive devices is very demanding. The first selection criterion for passives is that they must be accurate and stable to insure proper circuit performance. After this criterion is satisfied, there are requirements for low cost, small size and surface mounting. Accuracy normally dictates larger size, so the accuracy and small size requirements often conflict. More new surface mount components are coming out each day; thus it is a constant search to find accurate and stable passives which meet all the criteria.

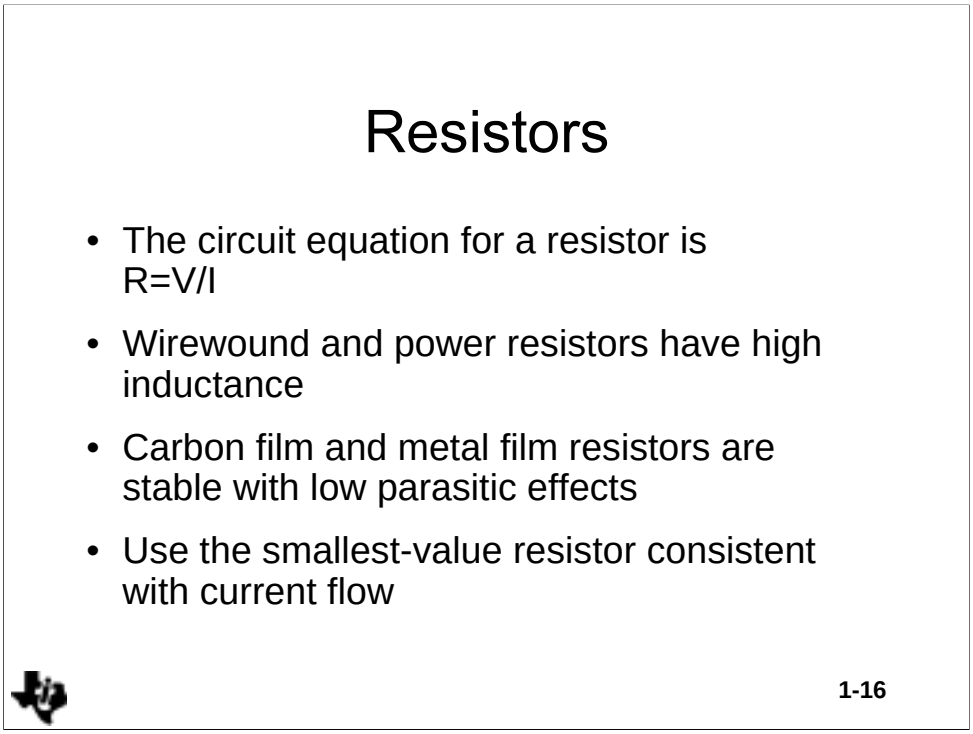

There are a lot of different resistors available for use, but only a few of them are satisfactory for accurate, stable, or high frequency circuits. Wirewound and most power resistors have too much stray inductance and capacitance to operate at high frequencies. Carbon film resistors have less stray capacitance and inductance, but they are limited to about one per cent accuracy. Also, carbon film resistors tend to drift quite a bit with temperature and vibration.

Metal film resistors share the stray inductance and capacitance problem with carbon films, but to a lesser extent. Metal film resistors come in closer tolerances approaching 0.05 per cent, and they are more stable under temperature and vibration extremes than the other types. Tolerances of 0.1 per cent and lower are hard to achieve, but there are specialty houses which make precision resistors on a daily basis.

Film resistors have pretty good noise performance, but some of the old carbon composition types had outstanding noise performance. When noise performance is a critical specification in a design, the resistor selection becomes very complicated.

Any problems discussed above are complicated with surface mount resistors. Some very good surface mount resistors have come on the market lately, but the surface mount selection still leaves a lot to be desired.

Resistor Equivalent Circuit

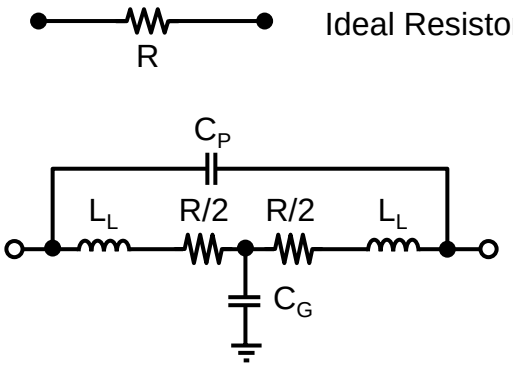

1-17

Inexperienced engineers assume that a resistor is just a resistor, and it really is a very complicated circuit. L_L simulates the inductance of each lead. C_P is the capacitance across the resistor, thus it appears to be in parallel with the resistor. C_P is about 0.5 pF for a 250 mW resistor.

C_G is formed by the resistor body and the ground plane, and it, like the rest of these stray effects, is really a distributed effect. Because it is small it appears as a capacitor connected to ground from the center of the resistor. Depending on the physical size of the resistor, C_P ranges from 0.01 pF on up to 0.5 pF.

The stray effects are reduced as the size of the resistor is reduced. Surface mount resistors have the best high frequency performance primarily because of their small size.

Potentiometers

- Potentiometers are:
  - Variable resistors
  - Used to adjust the voltage or current in the circuit
- Potentiometers have:
  - All the problems associated with fixed resistors
  - Severe drift problems caused by temperature and vibration



1-18

Potentiometers or pots are used to adjust the voltage or current at some point in a circuit. When tolerances stack up or when the specifications for a component can't be predicted accurately, pots are used to adjust out the tolerances thus obtaining the correct circuit parameter. The overuse of potentiometers is often a sign of poor design, but some equipment such as projection displays require many adjustments.

Pots have all of the bad problems associated with fixed resistors, and they exacerbate some of them and introduce new one. Pots are notorious for drifting under temperature or vibration stress. The connection from the resistive element to the lead is critical in fixed resistor design, and it is so good that it isn't considered a problem except with fractional ohm resistors. The wiper on a pot must slide across the resistive element, thus a good firm connection is impossible leading to a fractional ohm connection.

Systems that use large numbers of pots are converting to digital-to analog (DAC) converters. DACs come eight and twelve to a package, and their cost is equivalent to that of a pot. The adjustments are made through the keyboard or through a production test fixture. Smart systems self calibrate on start up thus eliminating the need for pots.

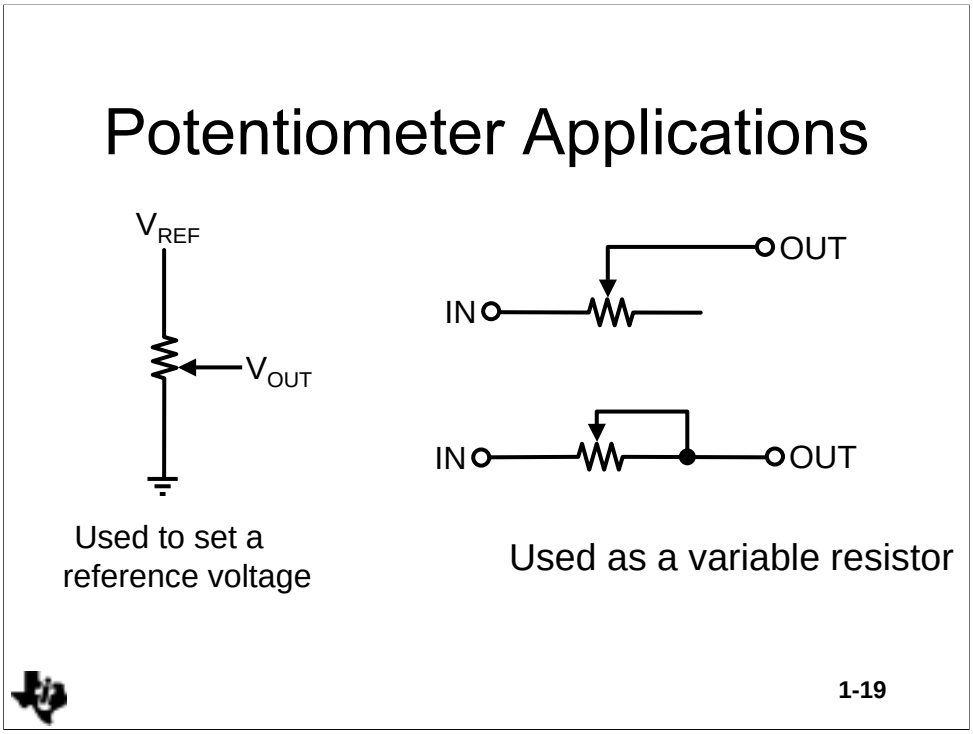

Pots are used in two major applications: voltage dividers for setting a reference and as variable resistors. The voltage divider application requires that the load be much higher in impedance than the pot to prevent loading of the pot by the load. This is a very popular application for pots, and the reference input voltage must be very stable because the circuit follows the reference. The reference voltage source should by well decoupled with a good grade capacitor to localize noise and keep it from spreading to other circuits.

Variable resistor applications can be very subtle, but the first thing to remember is that the pot has a limited current carrying capability. Do not connect the variable resistor configuration between the power supply and ground even if it connects through a semiconductor junction. When the variable resistor configuration is connected to ground in some manner, a series resistor must be inserted in the circuit to limit the current flow to a safe value.

Capacitors

- The equation for the impedance of a capacitor is $X_C=1/sC$ where $s=j\omega$
- Electrolytic capacitors are not suitable for high frequency applications
- Tantalum capacitors are suited for medium frequency applications
- Ceramic and mica capacitors are best for high frequency applications



1-20

The capacitor impedance is a function of frequency; at low frequencies the capacitor blocks signals, and at high frequencies the capacitor passes signals. Depending on the circuit connection, the capacitor can pass the signal to the next stage, or it can shunt it to ground.

All capacitors have a self-resonant frequency where they become ineffective as capacitors. Essentially, the capacitor goes to lunch at the self-resonant frequency. Aluminum electrolytic capacitors have a very low self-resonant frequency, so they are not effective in high frequency applications above a few hundred kHz. Tantalum capacitors have a mid range self-resonant frequency, thus they can be used up to several MHz. Beyond several MHz ceramic and mica capacitors are the best choice because the have self-resonant frequencies ranging into the hundreds of MHz. Beware; there are a lot of inexpensive ceramic capacitors on the market with poor high frequency performance.

Very low frequency and timing applications require another set of stable capacitors. The dielectric of these types of capacitor are made from polypropylene, polystyrene, and polyester. These capacitors have low leakage current, low dielectric absorption, and they come in large values.

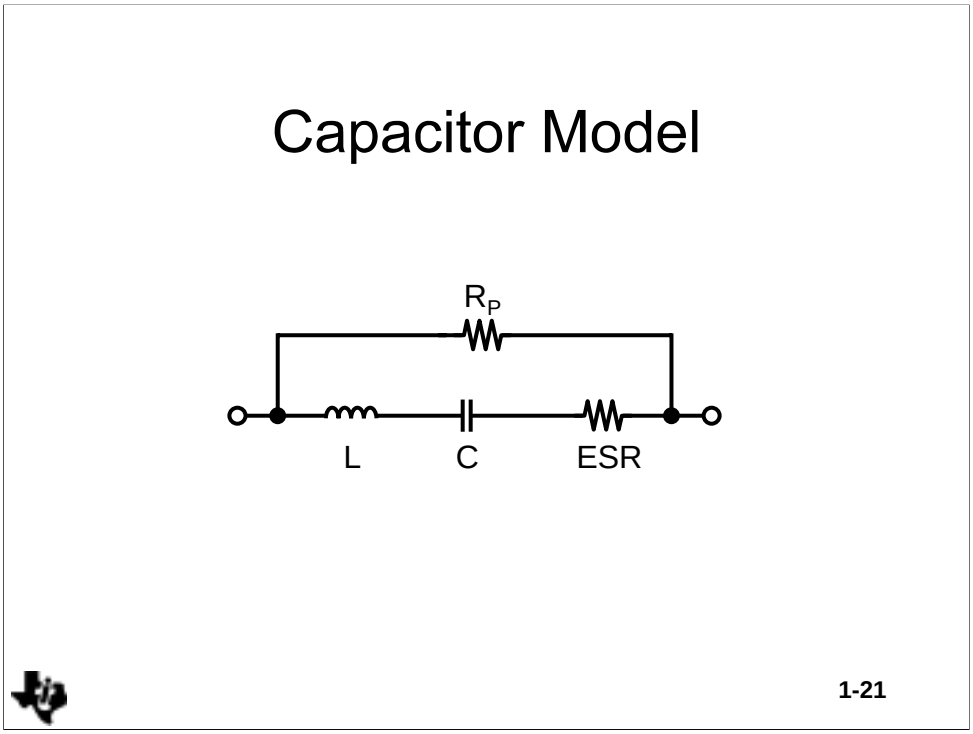

L models the lead and internal inductance of the capacitor. Except for dielectrics such as ceramic and mica, the internal inductance is dominant at high frequencies. In high frequency capacitors the lead inductance can be approximated as 1/12 NH per foot. The combination of internal and lead inductance causes the capacitor to become self-resonant, and at frequencies above resonance the capacitor will appear to be an inductor. High frequency applications demand capacitors with high self resonant frequencies and short leads which is why surface mount capacitors are used so often in high frequency circuits design.

The actual value of the capacitor is C. ESR stands for equivalent series resistance, and ESR is the effective resistance of the capacitor at the operating frequency. It is an important parameter when high currents are involved. Power supply filter design requires low ESR because voltage is dropped across the ESR, and the current flowing through the capacitor causes power dissipation resulting self heating. ESR is not an important parameter in the design of high frequency or signal processing circuits, thus is only specified for aluminum electrolytic and tantalum capacitors.

The parallel resistance of a capacitor is modeled by R_P. This resistance is a function of the operating voltage and capacitor temperature; hence, it drifts quite a bit. The electrolytic capacitors exhibit the lowest parallel resistance, and aluminum electrolytic capacitors are often modeled with a parallel current source in place of R_P. Other types of capacitors have a relatively high R_P ranging in the hundreds of meg ohms.

Inductors

- The equation for the impedance of an inductor is $X_L=sL$ where $s=j\omega$.
- Inductors have poor tolerance, and they are expensive.
- Power supplies and filters use inductors.
- Inductors requiring cores are big and heavy.
- Only the high frequency or signal filter inductor is modeled.



1-22

The primary use for inductors is for filters. There are two very different types of filter inductors: the high current inductor used in power supply filters, and the low current inductors used in signal filters.

High current inductors require cores to keep the losses within acceptable limits and to achieve high performance. The cores are big and heavy, so they contribute heavily to the cost, weight, and size of the equipment. Switching power supplies require extensive inductors or transformers to control the switching noise and smooth out the output voltage waveform.

Low current inductors are used for filters in signal processing circuits. Capacitors are used where ever possible because they are less expensive and readily available, but there are a few applications that inductors excel in. An inductive/capacitive filter has sharper slopes than a resistive/capacitive filter, thus it is a more effective filter in some applications. In general, inductors are rarely seen outside power circuits.

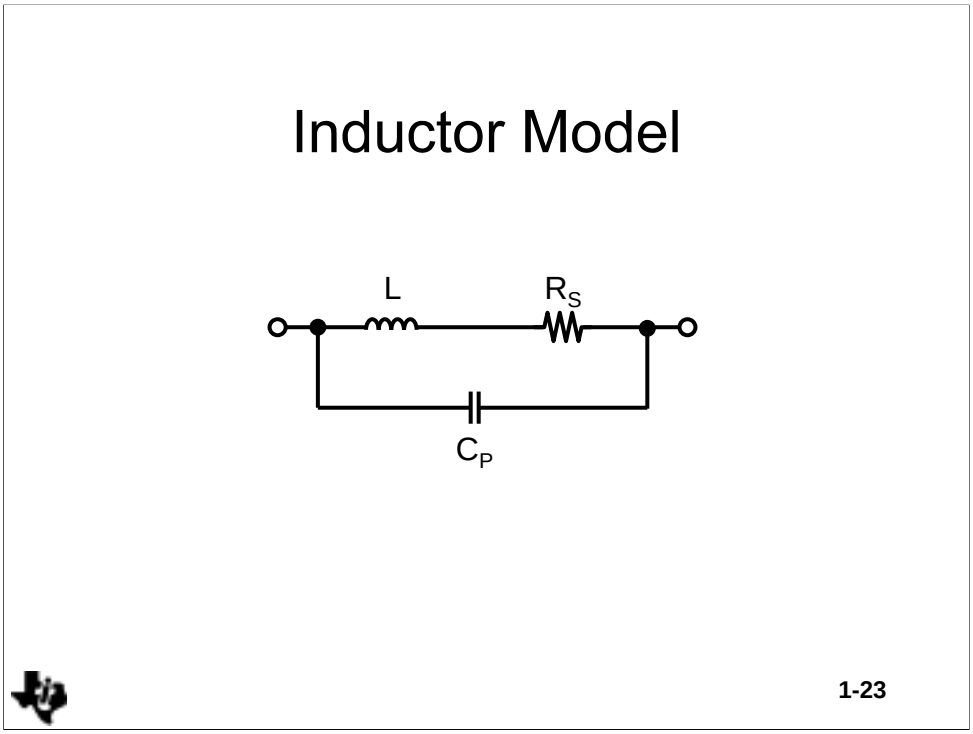

The inductor model is rather simple consisting of the inductor, L, a series resistance, R_S, and the parallel capacitance, C_P. The series resistance impacts the performance of the inductor considerably, and great efforts are made to keep R_S at a minimum, especially in power inductors. C_P does not come into play until the signal frequencies get in the MHz range. The parallel capacitance degrades the inductor performance at high frequencies.

Diodes

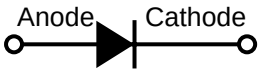

- Diodes conduct current in one direction, and they block current in the reverse direction.
- Forward biased diodes have a forward voltage drop of 0.6V, and a resistance of $r_e=26/I$
- Diodes can block very large voltages in the reverse direction.
- Diodes are used to block unwanted signals.

1-24

Diodes must be biased to be used, and often the circuit using the diode provides the bias. Forward biased diodes have the most positive voltage applied to their anode, while reversed biased diodes have the most positive voltage applied to their cathode. Forward biased diodes pass current in the forward direction which is the direction of the arrow, and reverse biased diodes block current flow. Forwards biased diodes exhibit a low resistance, and reverse biased diodes exhibit a high resistance.

A diode is used to make a positive peak detector by letting the signal forward bias the diode and storing the resultant voltage on a capacitor. Lesser voltages do not forward bias the diode, so they are ignored. When a diode is forward biased it is low resistance so it can pass a signal, and when it is reverse biased, the diode is high resistance thus blocking the signal. Connecting the cathode of a diode to ground means that the voltage across the diode will not exceed the forward biased diode drop of approximately 0.6 volts.

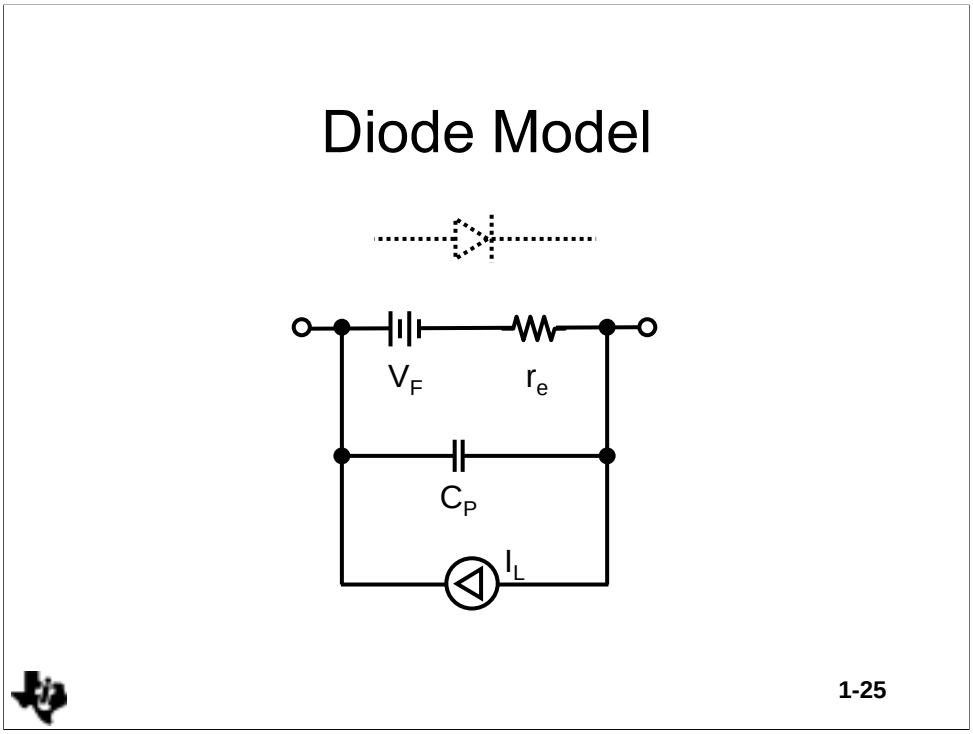

The forward voltage drop, V_F, is shown as a battery. The forward biased diode starts with a small voltage drop, but it very quickly rises to approximately 0.6 volts for a silicon diode and 0.2 volts for a germanium diode The voltage drop is a function of the bias current, but these approximations suffice for the majority of applications.

The diode resistance, r_e, is also a function of the forward current, and it is approximated by the equation $r_e = 26/I$. This is an approximation of r_e, but it holds over a wide range of currents. When the diode is reverse biased the forward current is zero, and the equation says that r_e equals infinity. This is not exactly true, but the relationship is too complicated for this discussion. A simple way out of the trap is to include the current source, I_L, which models a reverse biased leakage current. The leakage current is voltage and temperature sensitive, so it is best to use diodes which have very low leakage currents.

Diodes take a finite amount of time to turn on and turn off. Some of this time results from the carrier physics internal to the diode, and some of this time results from the parallel capacitance, C_P. Depending on the diode and the bias conditions, C_P ranges from a fraction of a pF for small switching diodes to a few hundred pF for power diodes. Remember, diodes have switching times that may have to be accounted for.

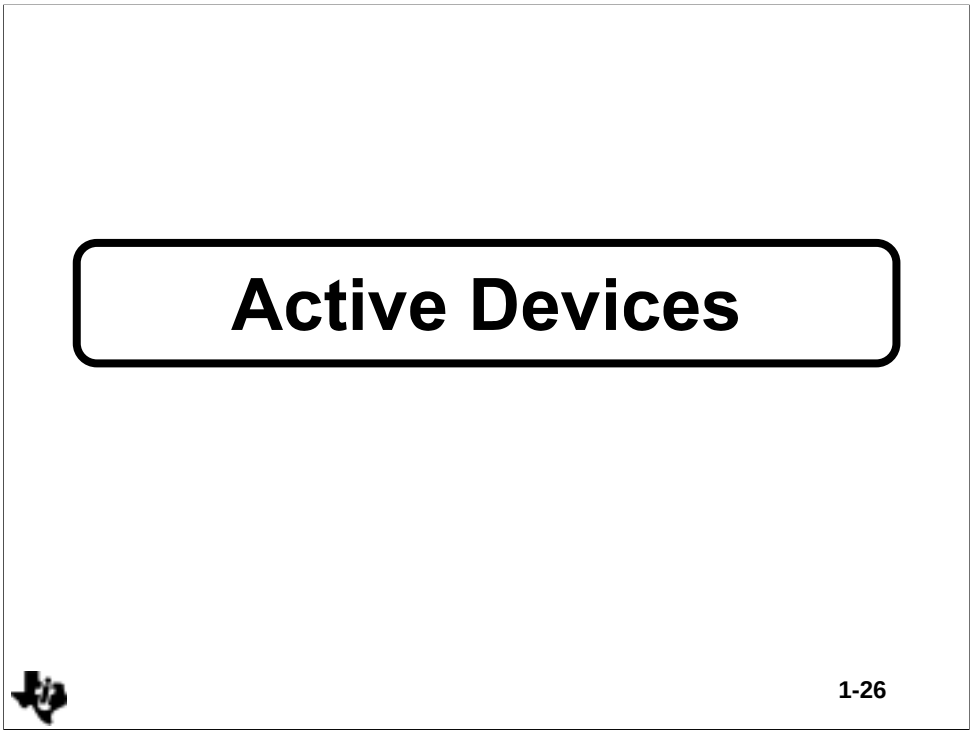

Active devices have gain; thus they can make up transfer functions not available to passive devices. Active devices are considerably more complicated than passive devices; thus, their models and transfer equations are more complicated than those of passive devices. Active devices are the foundation of all electronics.

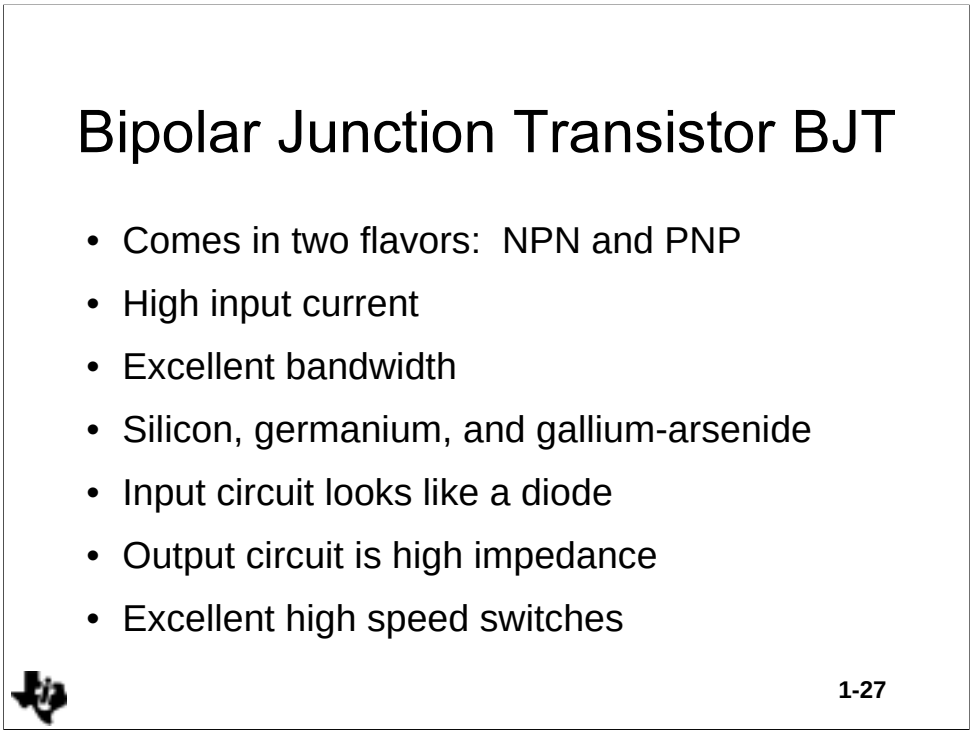

The bipolar junction transistor is often shortened to BJT. The BJT was the workhorse of the semiconductor industry until the field effect transistor (FET) manufacturing process was perfected. Since then the FET has been taking sockets from the BJT, but there are many applications, such as high frequency amplifiers, where the BJT still excels. Also, the BJT manufacturing process can be simple and inexpensive, and this, coupled with the BJT's long list of captured sockets, insures that the BJT will be around for a long time.

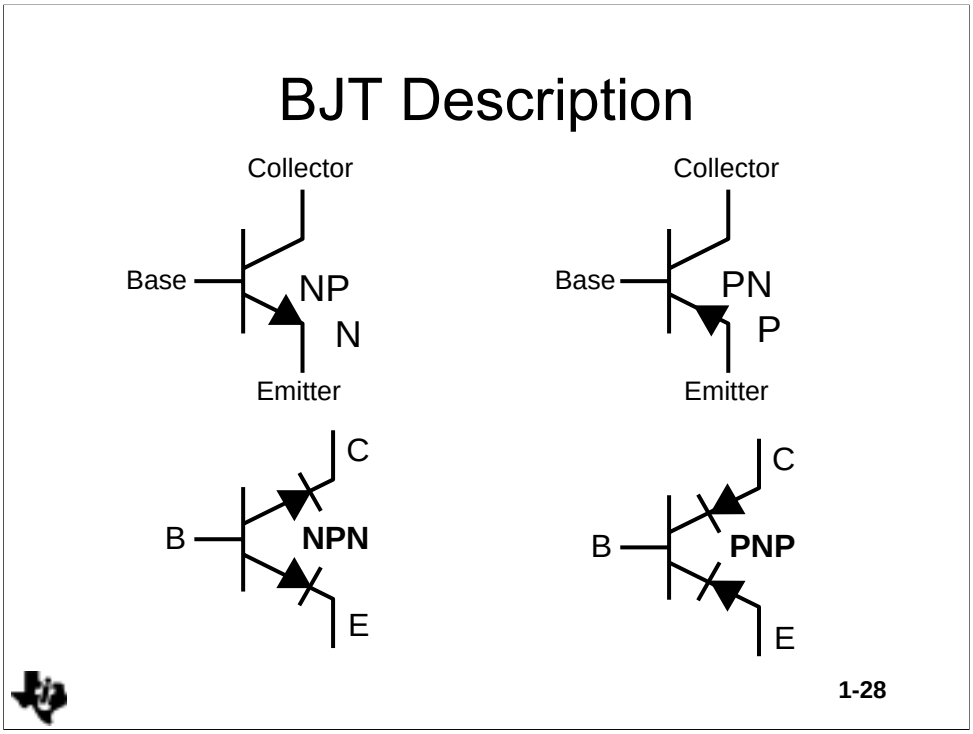

BJT transistors have three areas that are doped differently to produce different transistor actions. These three areas are called the base, emitter, and collector. The base and collector are doped to have the same polarity which can be positive or negative. The BJT, like most transistors, come in two types called NPN or PNP. P stands for positive, N stands for negative, and the positive or negative regions gain their name from the doping of the semiconductor material making up the base, collector and emitter areas of the BJT.

An NPN transistor looks like two diodes with the anodes connected. The anodes connection is called the base, one cathode is the collector, and the other cathode is called the emitter. Although this illustration would not work, it does have a basis in fact because if the width of the base junction were decreased enough, the back-to-back diodes would function as a transistor. Using the back-to-back diode model, transistors are commonly checked for short circuits and open circuits with an ohmmeter. It then is no surprise that the base-emitter circuit of a BJT looks like a forward biased diode, and the base-collector looks like a reverse biased diode.

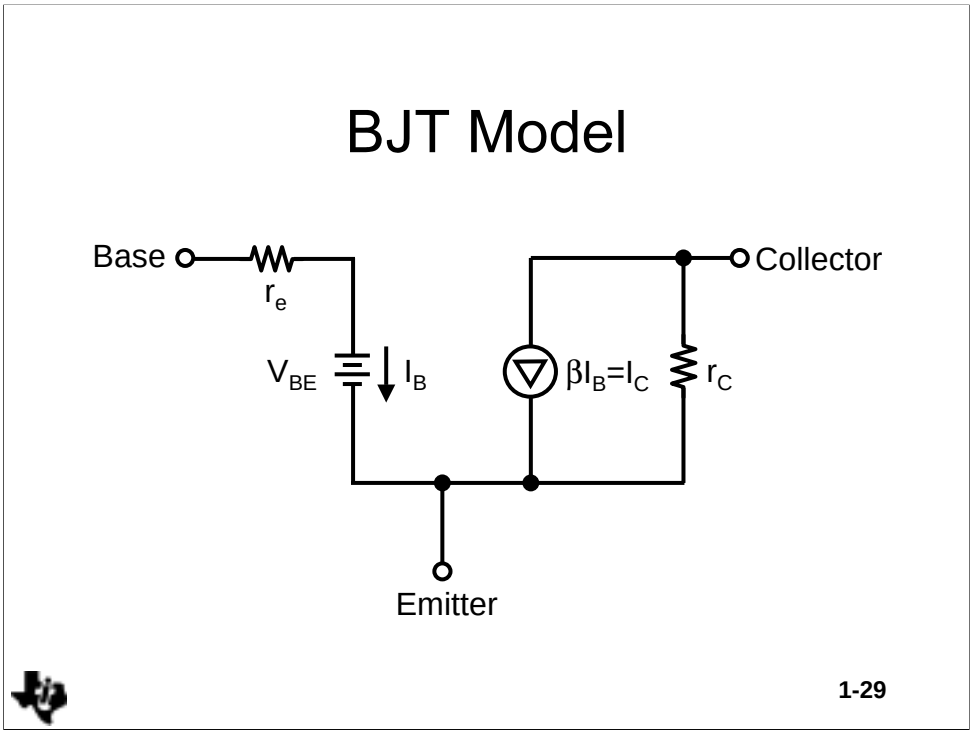

The model input looks like a forward biased diode, and the input impedance equation is $Z_{IN} = r_e = I_C/26$. The base-emitter junction must be forward biased, thus there is a forward voltage drop of V_{BE}. VBE is approximately 0.6 volts in a silicon transistor, and 0.2 volts in a germanium transistor. The input current is called I_B.

Since the collector-base junction is reverse biased, the collector current flows from the collector to the emitter. The collector current equation is $I_C = \beta(I_B)$ where β is the current gain of the transistor. The impedance of the collector-emitter junction is called r_c, and r_c is very high (in the MΩ range). Current gain and the forward voltage drop are a function of the manufacturing process, temperature, and several other items, hence they are not a stable parameter. BJT circuits which depend on β and V_{BE} are not stable; thus, in well designed BJT circuits, the external components stabilize these parameters with feedback.

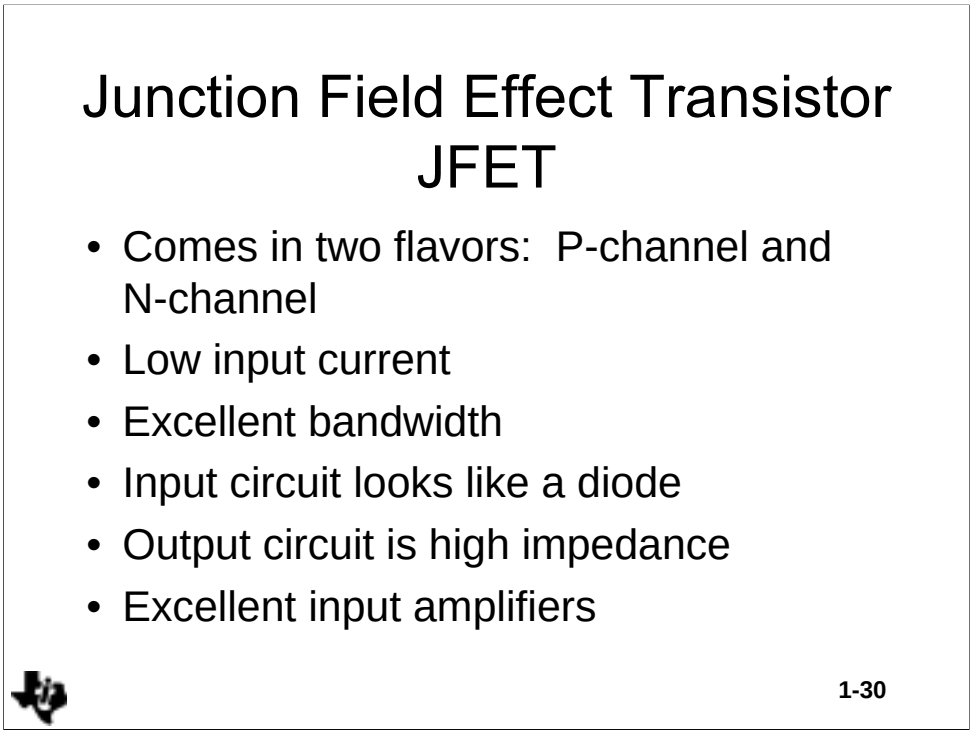

The junction field effect transistor is called the JFET, and it comes in two flavors, P-channel and n-channel. It has a high input impedance, so it is often used as the input circuit for amplifiers. The JFET has a high bandwidth, but circuit topologies and restrictions do not enable it to achieve the same high bandwidth, high voltage swing circuits of the BJT. Very often the JFET is used as the input stage to achieve high input impedance, and it can achieve high bandwidth with small signal swings of the input circuit.

JFETs and BJTs can be made with the same process, thus they are often combined to make a high input impedance, high bandwidth amplifier. The JFET output impedance is high in the off state and low in the on state.

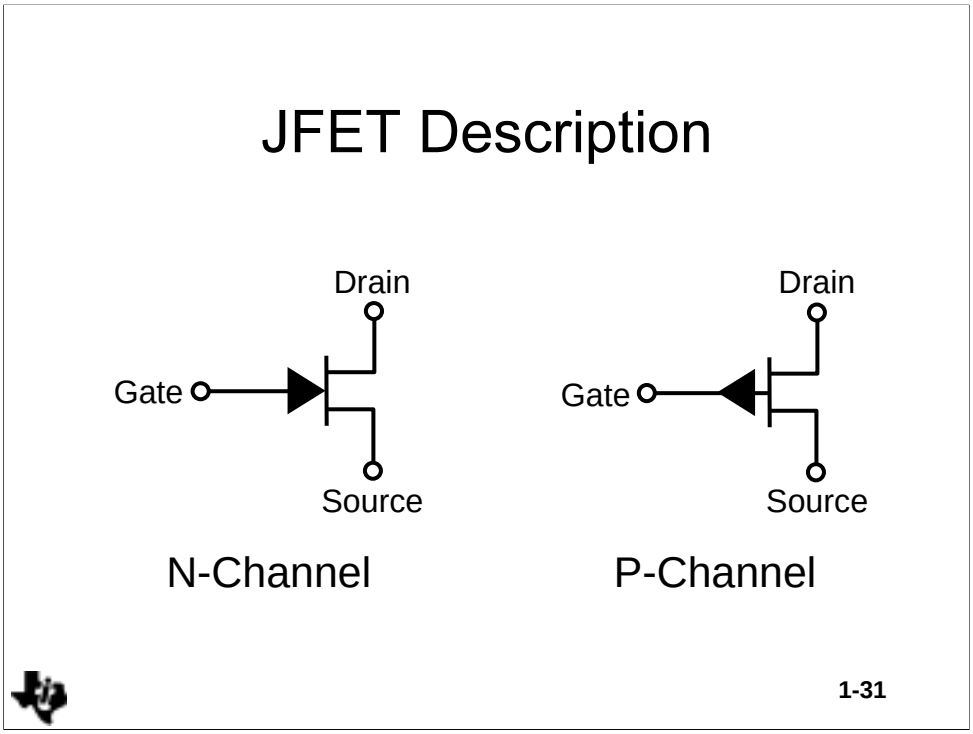

The JFET can be visualized as a bar of doped silicon that has a diode junction made in the middle of the bar. If the silicon bar is doped N, then the JFET is called a N-channel device. When the n-channel gate is negative with respect to the source the diode is biased off, the bar is depleted of carriers, and the source to drain resistance is quite high (several MΩ). When the n-channel gate is positive with respect to the source the diode is biased on, the bar is flooded with carriers thus causing a low source to drain resistance (as low as mΩ). The converse is true for a P-channel JFET.

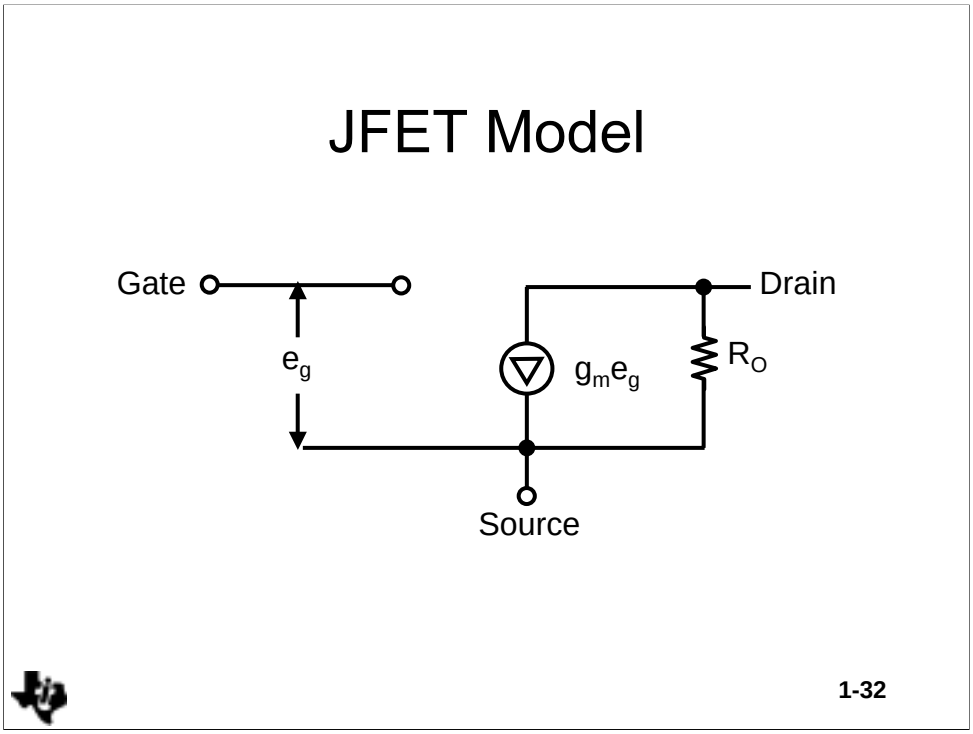

When the JFET is biased in its linear region the gate is represented as an open circuit. The drain to source current is a voltage controlled current source, $g_m(e_g)$. The output resistance is modeled by R_O. As long as the signal swings stay in the linear region, the gate-source voltage signal swing induces a drain-source current.

Metal Oxide Semiconductor, Field Effect Transistor

- Comes in two flavors: N-channel and P-channel
- Highest input impedance
- Output circuit is low impedance
- Excellent power switches
- No second-breakdown failure mechanism
- Excellent bandwidth



1-33

The BJT and JFET have a diode in their input circuit which controls their mode of operation. The metal oxide semiconductor field effect transistor (MOSFET) works on a similar principle, but the diode is buried within the MOSFET. The MOSFET input diode is controlled by an electric field in the gate region, thus the input impedance is extremely high because there are no diode effects to lower the impedance. The input impedance of MOSFETs is so high that there is no mechanism that can bleed off accumulated charge, thus they are packaged with lead shorting wires to protect them.

The MOSFET is a majority carrier device, and because majority carriers have no recombination delays, the MOSFET achieves extremely high bandwidths and switching times. The gate is electrically isolated from the source, and while this provides the MOSFET with its high input impedance it also forms a good capacitor. Driving the gate with a dc or low frequency signal is a snap because Z_{IN} is so high, but driving the gate with a step signal is much harder because the gate capacitance much be charged at the signal rate. This situation leads to a paradox; the high input impedance MOSFET must be driven with a low impedance driver to obtain high switching speeds or low bandwidth.

MOSFETs do not have a secondary breakdown area, and their drain-source resistance has a positive temperature coefficient, so they tend to be self protective. These features coupled with the very low on resistance and lack of a junction voltage drop when forward biased, make the MOSFET an extremely attractive power supply switching transistor.

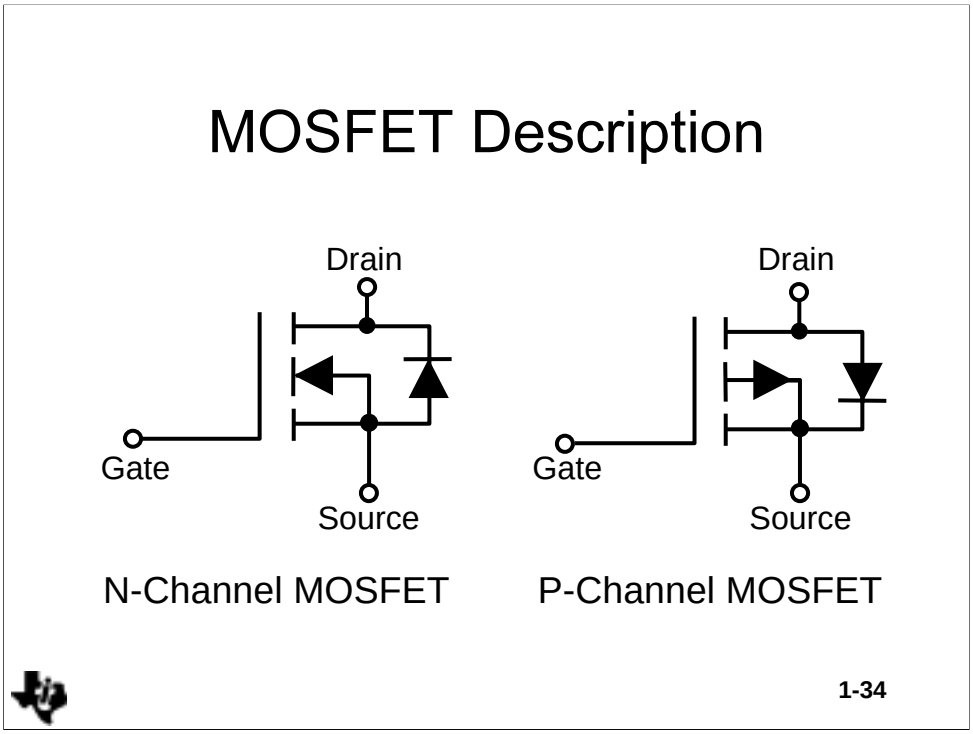

The MOSFET can be visualized as a bar of doped silicon that contains a diode junction in the middle of the bar. If the silicon bar is doped N, then the MOSFET is called a N-channel device. When the n-channel gate is charged negative with respect to the source the internal gate diode is biased off, the bar is depleted of carriers, and the source to drain resistance is quite high (several MΩ). When the n-channel gate is charged positive with respect to the source the internal gate diode is biased on, the bar is flooded with carriers thus causing a low source to drain resistance (as low as mΩ). The converse is true for a P-channel MOSFET.

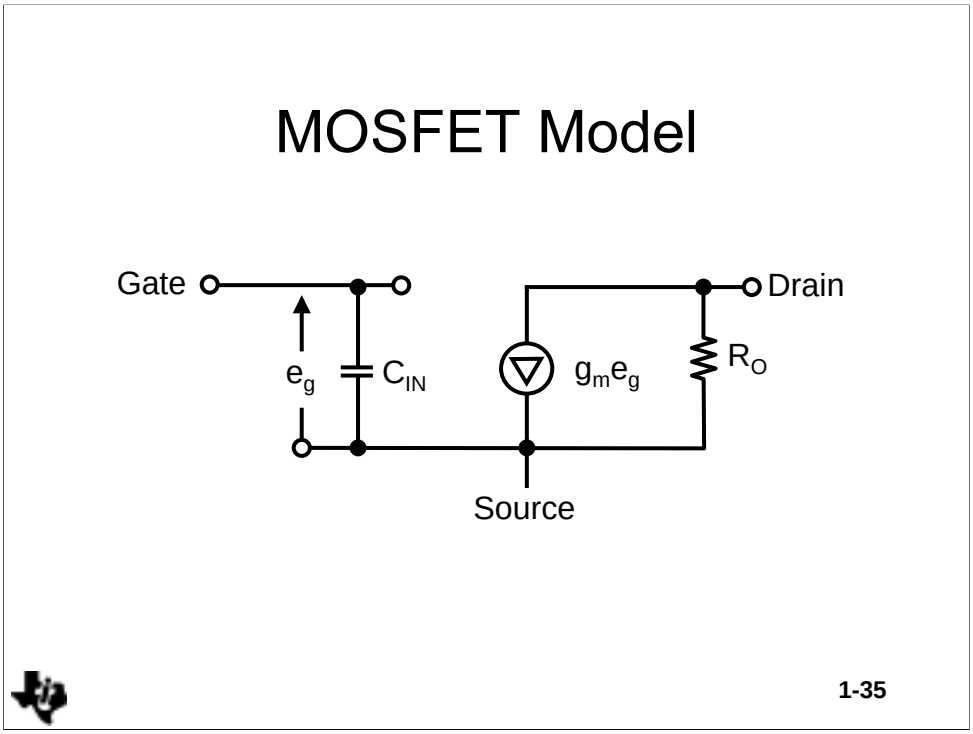

When the MOSFET is biased in it's linear region the gate is represented as an open circuit. The drain to source current is a voltage controlled current source, $g_m(e_g)$. The output resistance is modeled by R_O. As long as the signal swings stay in the linear region, the gate-source voltage signals induce a drain-source current.

The MOSFET contains a diode connected across from the drain (cathode) to the source (anode). This diode is not forward biased during normal operation, consequently it does not conduct current during normal operation. When the MOSFET is connected to an inductive load the inductive kick causes the diode to turn on and conduct current. In some modes of operation this is a desired effect because it limits the inductive voltage rise. The diode is not fast turn-off, so it consumes quite a bit of power during turn-off. The turn-off power consumption is detrimental in some circuits, thus those circuits must put a diode with a smaller forward voltage drop (Schottky diode) in parallel with the body diode.

C_{IN} can be as large as several hundred pF, and it must be charged by the gate signal. The gate is normally driven by a low impedance driver so that C_{IN} can be charged quickly. If C_{IN} is charged slowly, the switching time of the MOSFET is long, causing the MOSFET to stay in the linear region for a long time. When the MOSFET operates in the linear region it's voltage drop and current flow are high resulting in a high power dissipation.

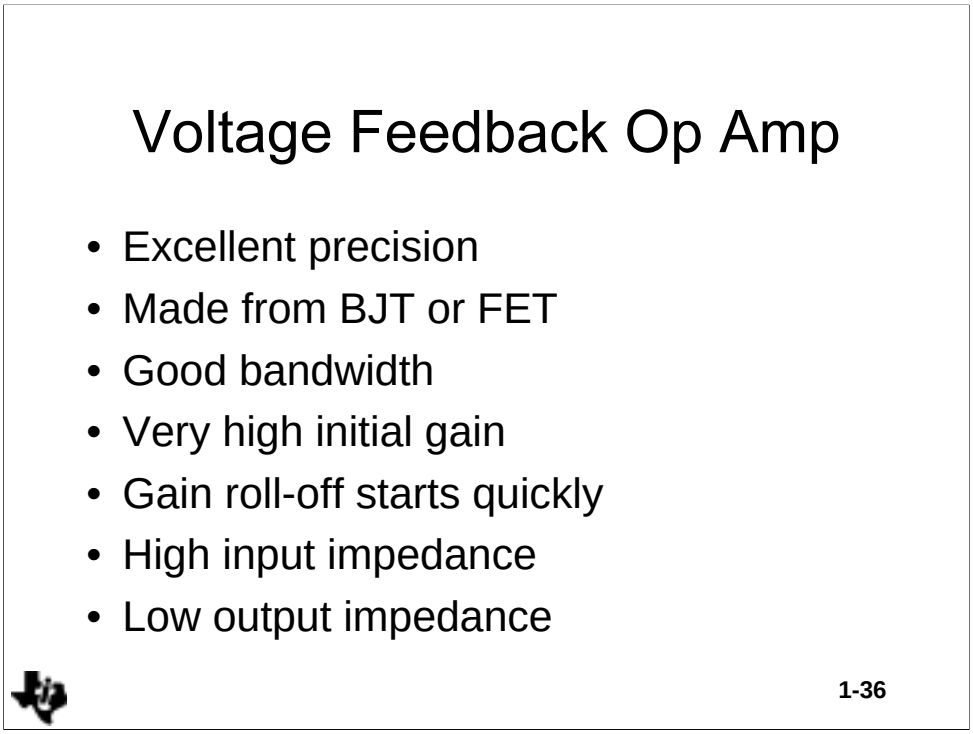

The voltage feedback operational amplifier (VF op amp), or op amp as it is affectionately known, is a versatile amplifier which requires feedback to function. The op amp gain is so high that the output saturates on any differential input signal, so feedback is employed to lower the closed loop gain. The feedback makes the op amp circuit a precision circuit because the gain becomes dependent on the passive components which can be very accurate. Some op amp parameters, such as input offset voltage can still degrade the precision, but there are specially designed precision op amps that have very low input offset voltages (micro volts), and selected salient parameters chosen to yield a precision circuit.

Op amp bandwidth depends on the process used to make the op amp, and BJT op amps are highest bandwidth and current drain, with JFET op amps being next, and MOSFET op amps have the lowest bandwidth and current drain. Voltage feedback op amps are discussed in this section, and their bandwidth starts rolling off at low frequencies (about five decades before the advertised gain-bandwidth point.

The input impedance of the VF op amps is very high, and their output impedance is relatively low, thus they ideal for configuring many different circuits. Some the possible circuits op amp can make are inverting amplifiers, non-inverting amplifiers, differential amplifiers, summing amplifiers, integrating amplifiers, and a host of others.

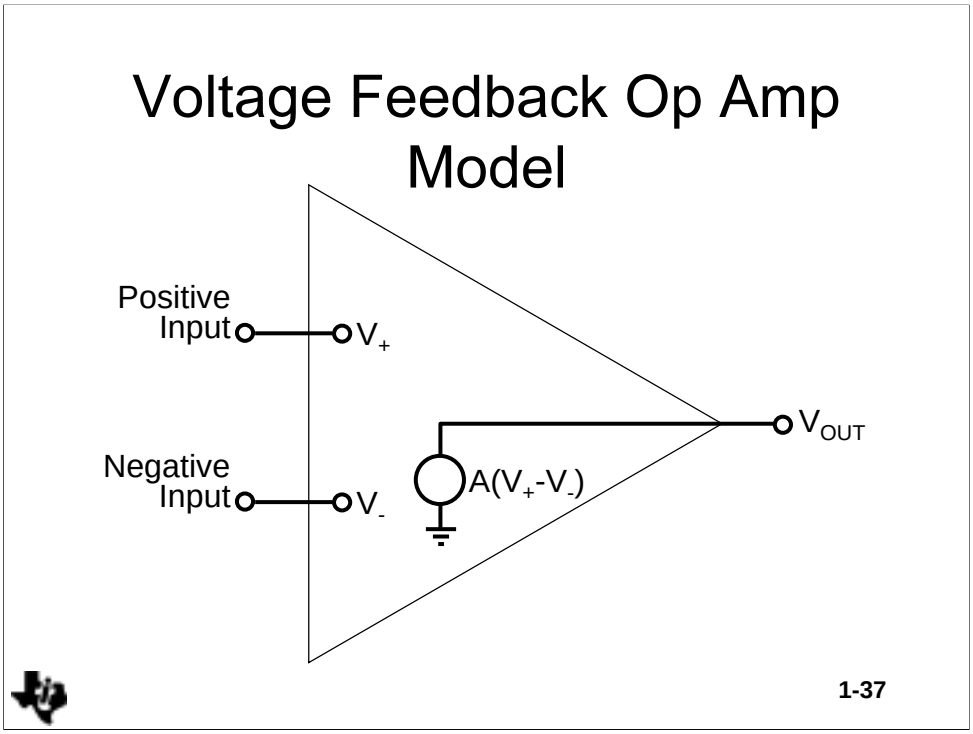

The input impedance of VF op amps is very high, and it is often modeled as an open circuit. The output circuit consists of a voltage controlled voltage source, and the control voltage is the differential voltage applied across the inputs.

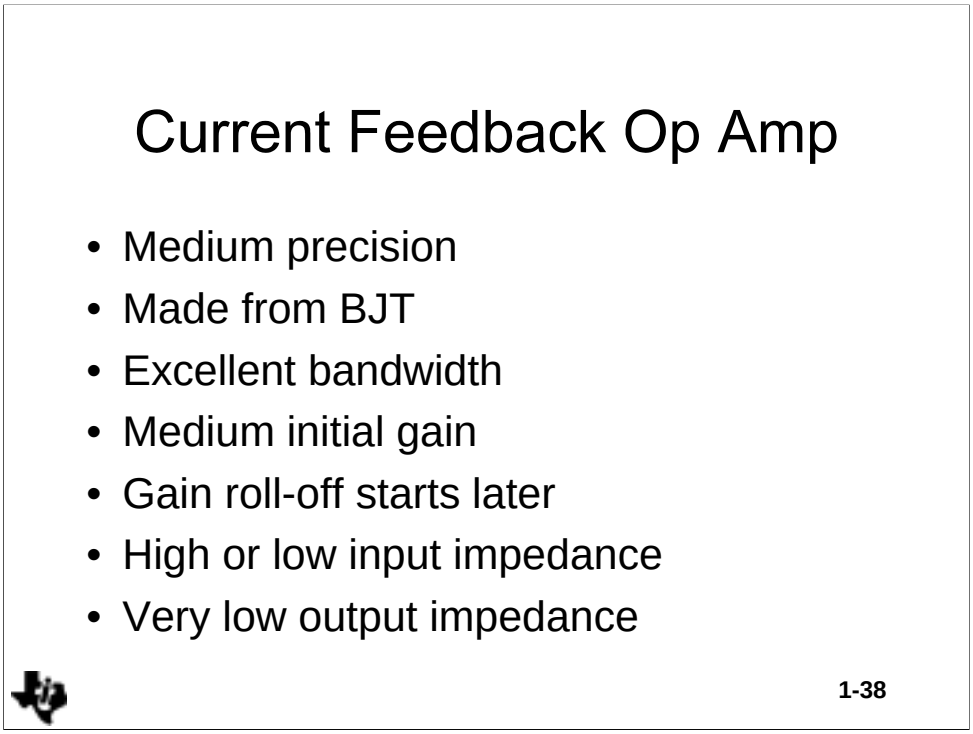

Current feedback op amps (CF op amp) are also called op amps, hence there can be confusion about which type of op amp (voltage or current feedback) is under discussion. It is assumed that voltage feedback op amps are being discussed unless a reference is made to the current feedback op amp. There are several reasons why CF op amps do not achieve the precision that VF op amps do: the applications for CF op amps generally do not require high precision, and the CF op amp configuration makes it hard to achieve precision. CF op amps are used for high frequency applications where the dc portion of the signal does not contain information, thus precision is not important in these applications. The input structure of a CF op amp is not matched, hence it is hard to obtain dc precision under these conditions.

CF op amps are usually made with BJTs because they yield very high bandwidths. The high bandwidth of a CF op amp does not start rolling off till much higher frequencies (several decades), and it rolls off at a much faster rate. CF op amps have bandwidths in the GHz range while VF op amp bandwidths are down in the several hundred MHz range.

The input impedance of CF op amps is high for the positive input and low for the negative input because there is a voltage buffer between the inputs.

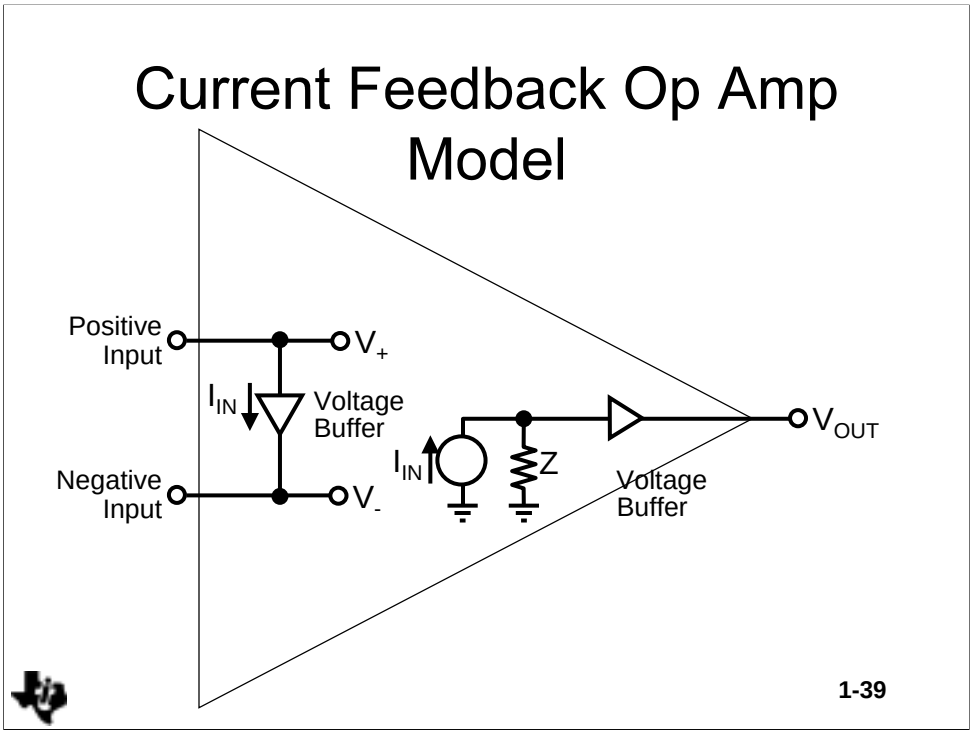

The positive input is a voltage buffer input, so the positive input has a very high input impedance. The negative input is connected to the output of the same voltage buffer, hence the negative input impedance is zero. It is very hard to match parameters between the inputs because they are different ends of a buffer, and this situation makes it hard to build precision CF op amps.

The output circuit contains a transimpedance stage, Z, so the error current which flows through the input stage I_{IN} is multiplied by Z to form a voltage. This voltage is buffered before it becomes the output voltage, thus the CF op amp has a very low output impedance.

Voltage Comparator

- Has an op amp front end bolted onto a digital backend
- Used to convert analog signals to digital signals
- Simplest form of the analog-to-digital converter
- Fast propagation speeds



1-40

The voltage comparator is used to convert an analog signal to a digital signal. This is usually accomplished by connecting a reference to one comparator input and a signal to the other input. When the signal exceeds the reference the output changes state. Inverted operation can be obtained with a comparator.

The input stage of a comparator is similar to an op amp input stage. The differential input voltage is multiplied by the gain to obtain an output signal. The comparator gain is very large, and it is not limited by feedback, so the output would saturate if it was an op amp. The difference is that the comparator has an output stage that reaches a limit but does not saturate. The comparator's ability to run open loop without saturating separates it from the op amp which always saturates when it runs open loop. Never use op amps as comparators when the propagation delay is important, because when an op saturates the time it takes for the op amp to come out of saturation is unpredictable.

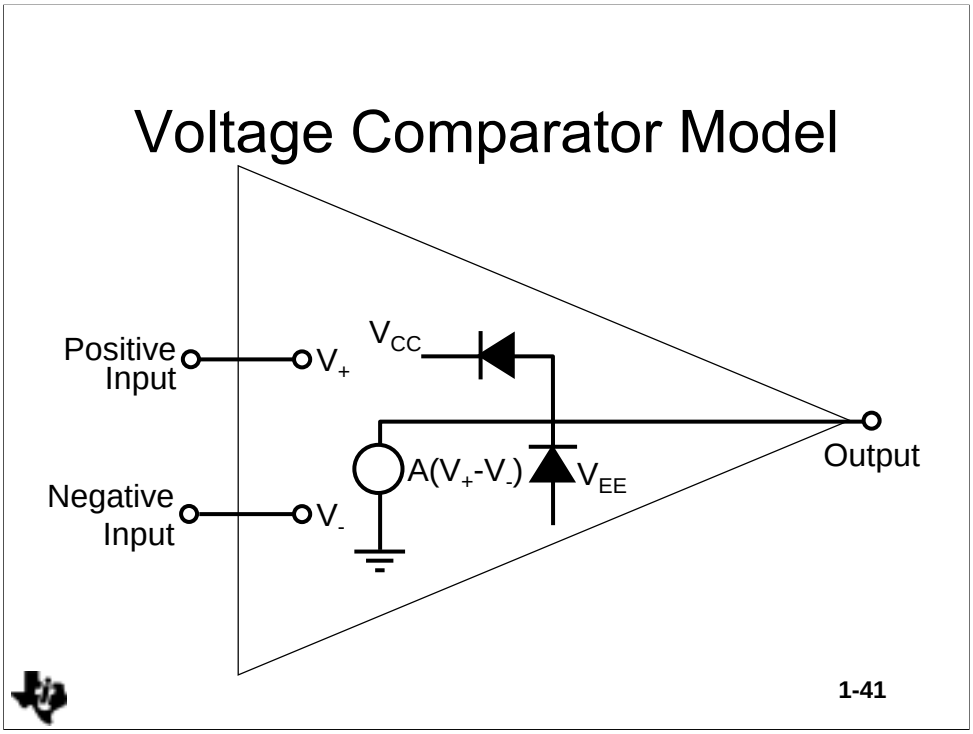

The voltage comparator input stage is identical to a VF op amp input stage, consequently the comparator input impedance is very high. The inputs can be matched very well, thus comparators are capable of doing precision work. The voltage comparator output stage looks like a very high open loop gain stage that has it's output clamped to the power supply rails. There are other forms of the output stage which have two leads, and they enable the circuit designer to connect the output to two different voltage levels. This type of comparator is useful when the input must sense signals over a wide voltage range including negative voltages, and the output voltage swing must be compatible with a specific logic family.

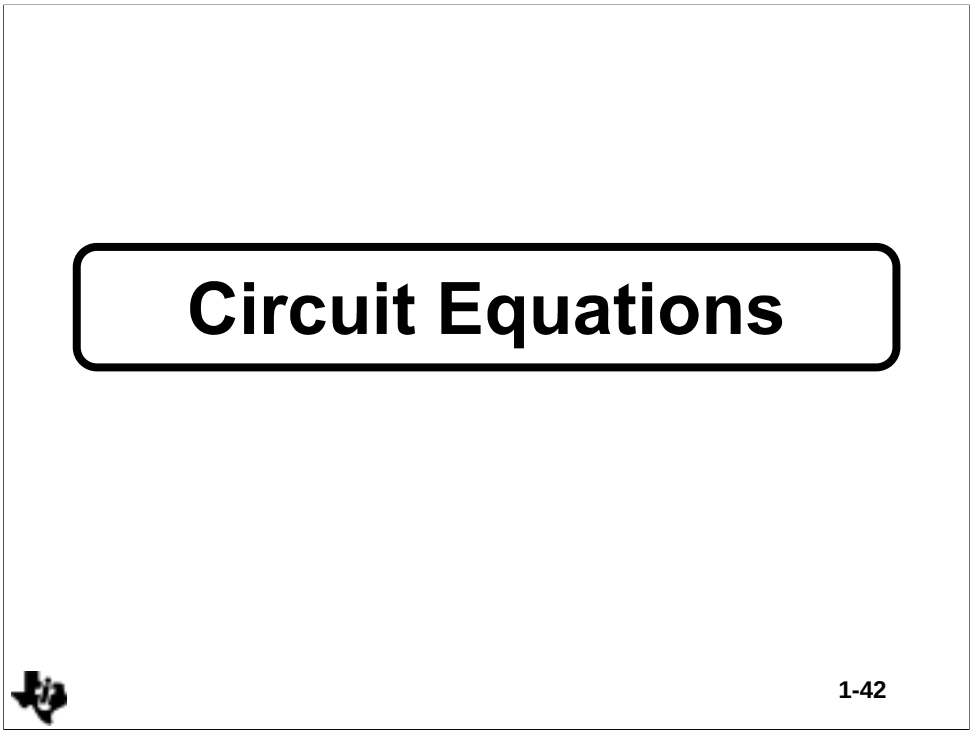

Although this seminar tries to minimize math and physics, some of each is required to understand analog electronics. Math and physics are presented in this seminar in the manner in which they are used later, so the shortest amount possible time is spent on these subjects.

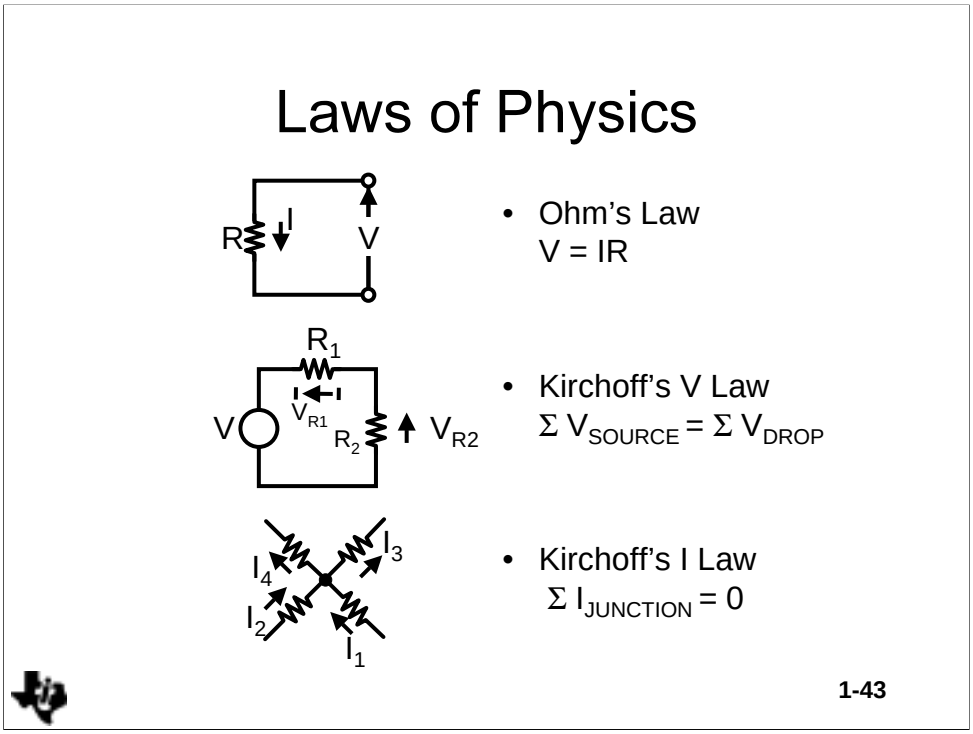

Ohm's law, V=IR, is fundamental to all electronics. It can be applied to a single component or to a complete circuit. When the current flowing through any portion of a circuit is known, the voltage dropped across that portion of the circuit is obtained by multiplying the current times the resistance.

Kirchoff's voltage law states that the sum of the voltage drops in a series circuit equals the sum of the voltage sources. When taking sums keep in mind that the sum is an algebraic quantity.

Kirchoff's current law states; the sum of the currents entering a junction equal the sum of the currents leaving a junction. It makes no difference if a current comes from a current source or through a resistor because all currents are treated equal.

Voltage Divider Rule

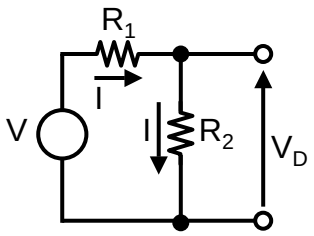

- Assumes that R_2 is not loaded

$$V_D = V\frac{R_2}{R_1 + R_2}$$

$$V = IR_1 + IR_2 = I(R_1 + R_2)$$

$$I = \frac{V}{(R_1 + R_2)}$$

$$V_D = IR_2 = \frac{V}{(R_1 + R_2)}(R_2) = V\frac{R_2}{R_1 + R_2}$$

1-44

When the output of a circuit is not loaded, the voltage divider rule can be used to calculate the circuit's output voltage. Assume that the same current flows through all circuit elements. Equation 4-44-1 is written using Ohm's law. Algebraic manipulation yields equation 4-44-2:

$$V = I(R_1 + R_2) \quad \text{(4-44-1}$$

$$I = \frac{V}{(R_1 + R_2)} \quad \text{(4-44-2}$$

Again, Ohm's law is used on the output circuit yielding equation 4-44-3. Substituting equation 4-44-2 into 4-44-3 yields equation 4-44-4:

$$V_D = IR_2 \quad \text{(4-44-3}$$

$$V_D = V\frac{R_2}{R_1 + R_2} \quad \text{(4-44-4}$$

The output resistor is divided by the total circuit resistance, and this fraction is multiplied by the input voltage to obtain the output voltage. Output resistor divided by the total resistance is a simple way to remember the voltage divider rule.

Current Divider Rule

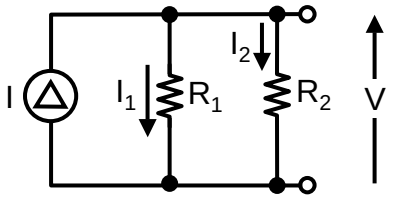

- Assumes no load besides R_1 and R_2

$$I_2 = I\frac{R_1}{R_1 + R_2}$$

$I = I_1 + I_2$

$V = I_1R_1 = I_2R_2$

$I_1 = I_2\frac{R_2}{R_1}$

$I = I_1 + I_2 = I_2\frac{R_2}{R_1} + I_2 = I_2\left(I + \frac{R_2}{R_1}\right) = I_2\left(\frac{R_1 + R_2}{R_1}\right)$

Then: $I_2 = I\frac{R_1}{R_1 + R_2}$

1-45

When the output of a circuit is not loaded, the current divider rule can be used to calculate the current flow in the output component. The currents I_1 and I_2 are assumed to be flowing in the branch circuit. Equation 4-45-1 is written with the aid of Kirchoff's current law. The circuit voltage is written in equation 4-45-2 with the aid of Ohm's law. Combining equations 4-45-1 and 4-45-2 yields equation 4-45-3:

$$I = I_1 + I_2 \quad \text{(4-45-1}$$

$$V = I_1R_1 = I_2R_2 \quad \text{(4-45-2}$$

$$I = I_1 + I_2 = I_2\left(\frac{R_2}{R_1}\right) + I_2 = I_2\left(1 + \frac{R_2}{R_1}\right) = I_2\left(\frac{R_1 + R_2}{R_1}\right) \quad \text{(4-45-3}$$

Rearranging the terms in equation 4-45-3 yields equation 4-45-4:

$$I_2 = I\frac{R_1}{R_1 + R_2} \quad \text{(4-45-4}$$

The total circuit current divides into two parts, and the resistance, R_1, divided by the total resistance determines how much current flows through R_2. A way to remember the current divider rule is that the opposite resistor is divided by the total resistance.

Thevenin's and Norton's Theorems

- Employed to isolate some part of the circuit
- Results in a simplified equivalent circuit
- Much quicker analysis
- If input is a voltage source use Thevenin's theorem
- If input is a current source use Norton's theorem



1-46

There are times when it is advantageous to isolate a part of the circuit. Rather than write loop or node equations and solving them simultaneously, Thevenin's theorem enables us to isolate part of the circuit we are interested in. We then replace the remaining circuit with a simple series equivalent circuit, thus Thevenin's theorem simplifies the analysis.

There are two theorems that do the similar functions, and the second theorem is called Norton's theorem. Thevenin's theorem is used when the input is a voltage source, and Norton's theorem is used when the input is a current source. Norton's theorem is rarely used, so its explanation is left to outside sources.

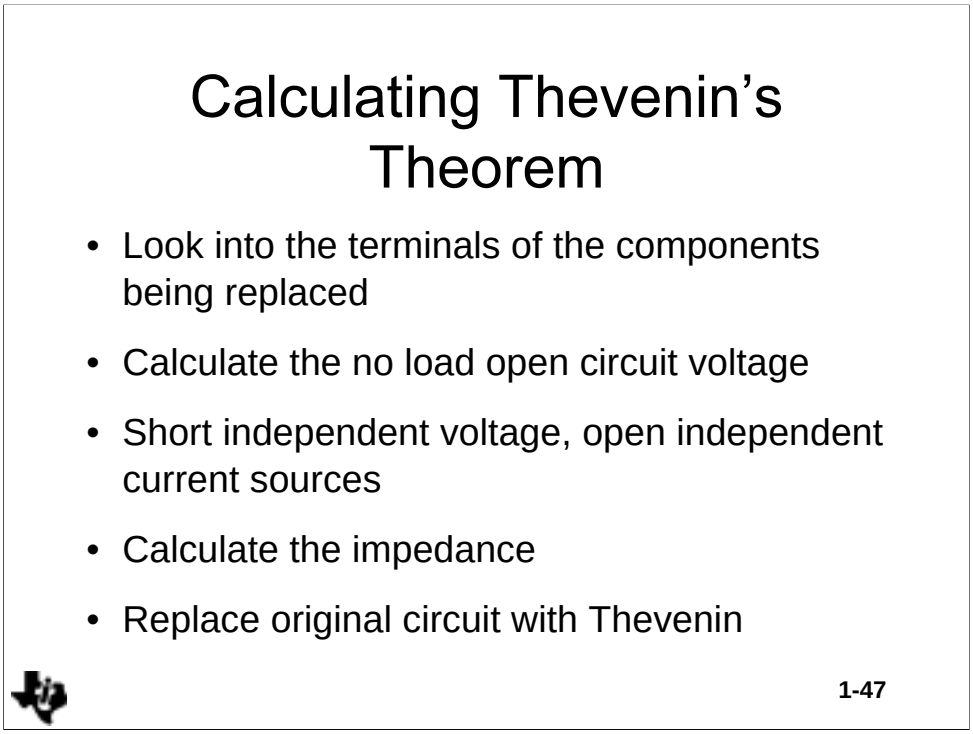

The rules for Thevenin's theorem start with the component or part of the circuit being replaced. Look into the terminals of the circuit being replaced, and calculate the no load voltage as seen from these terminals (much like calculating a voltage divider). Again, looking into the terminals of the circuit being replaced, short independent voltage sources, and calculate the impedance between these terminals. Now, the next step is to substitute the Thevenin equivalent circuit for the circuit part you wanted to replace.

The Thevenin equivalent circuit is a simple series circuit; thus further calculations are simplified. The simplification of circuit calculations is often sufficient reason to use Thevenin's theorem because it eliminates the need for solving several simultaneous equations. The detailed information about what happens in the circuit that was replaced is not available when using Thevenin's theorem, but that is of no consequence because you had no interest in it.

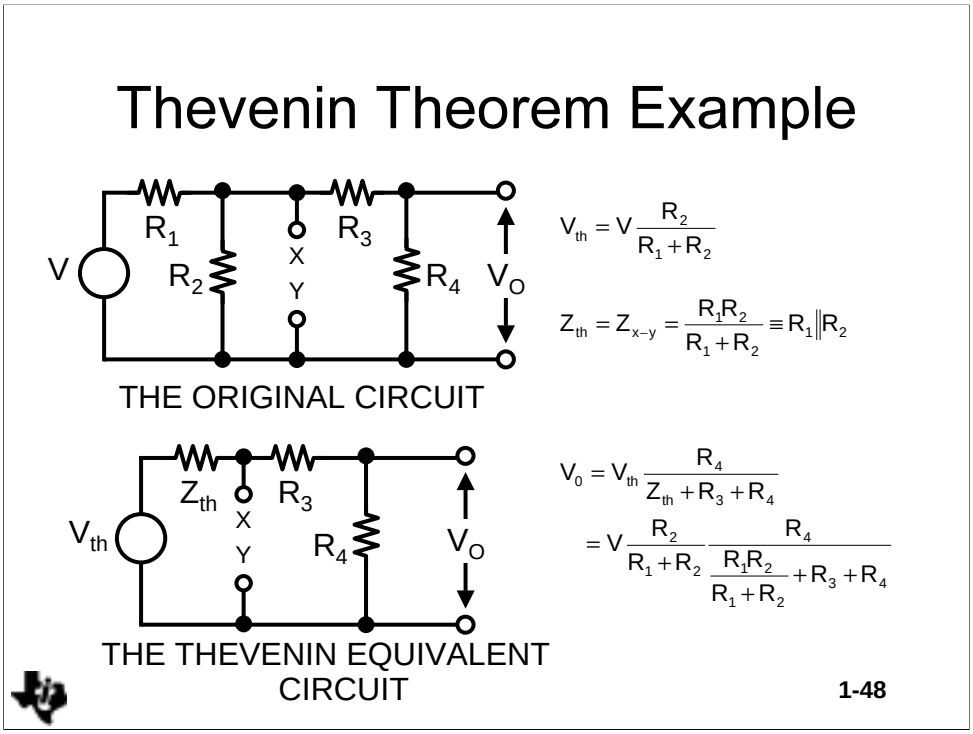

In this example we want to calculate the output voltage, V_O. The first step is to stand on the terminals X-Y with your back to the output circuit, and calculate the open circuit voltage seen. This is a perfect opportunity to use the voltage divider rule to obtain equation 4-7-1.

$$V_{th} = V\frac{R_2}{R_1+R_2} \quad \text{(4-48-1}$$

Still standing on the terminals X-Y, step two is to calculate the impedance seen looking into these terminals. The Thevenin impedance is the parallel impedance of R_1 and R_2 as calculated in equation 4-48-2.

$$Z_{th} = Z_{x-y} = \frac{R_1R_2}{R_1+R_2} \equiv R_1 \| R_2 \quad \text{(4-48-2}$$

Now get off the terminals X-Y before you damage them with your big feet. Step three replaces the circuit to the left of X-Y with the Thevenin equivalent circuit V_{th} and R_{th}.

The final step is to calculate the output voltage. Notice the voltage divider rule is used again. Equation 4-48-3 describes the output voltage, and it comes out naturally in the form of a series of voltage dividers, which makes sense. That's another advantage of the voltage divider rule; that the answers normally come of in a recognizable form rather than a jumble of coefficients and parameters.

$$V_0 = V_{th}\frac{R_4}{Z_{th}+R_3+R_4} = V\frac{R_2}{R_1+R_2}\frac{R_4}{\frac{R_1R_2}{R_1+R_2}+R_3+R_4} \quad \text{(4-48-3}$$

Doing the Analysis the Hard Way

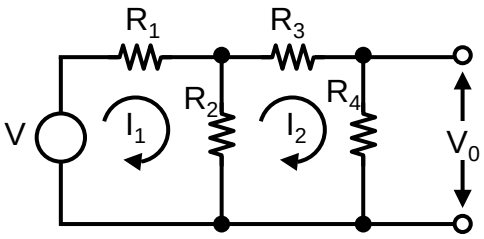

$$V = I_1(R_1 + R_2) - I_2R_2$$

$$I_2(R_2 + R_3 + R_4) = I_1R_2$$

$$I_1 = \frac{R_2 + R_3 + R_4}{R_2} I_2$$

$$V = I_2 \frac{(R_2 + R_3 + R_4)}{R_2}(R_1 + R_2) - I_2R_2$$

$$I_2 = \frac{V}{\frac{R_2 + R_3 + R_4}{R_2}(R_1 + R_2) - R_2}$$

$$V_0 = I_2R_4$$

$$V_0 = V \frac{R_4}{\frac{(R_2 + R_3 + R_4)(R_1 + R_2)}{R_2} - R_2}$$



1-49

The circuit analysis is done here the hard way, so you can see the advantage of using Thevenin's Theorem. Two loop currents, I_1 and I_2, are assigned to the circuit. Then the loop equations, 4-49-1 and 4-49-2, are written. Equation 4-49-2 is rewritten in equation 4-49-3, and substituted into equation 4-49-1. The terms are rearranged in equation 4-49-5. Ohm's law is used to write equation 4-49-6, and the final substitutions are made in equation 4-49-7.

This is a lot of extra work for no gain. Also, the answer is not in a usable form, thus more algebra is required to get the answer into usable form.

$$V = I_1(R_1 + R_2) - I_2R_2 \quad \text{(4-49-1}$$

$$I_2(R_2 + R_3 + R_4) = I_1R_2 \quad \text{(4-49-2}$$

$$I_1 = \frac{R_2 + R_3 + R_4}{R_2} I_2 \quad \text{(4-49-3}$$

$$V = I_2 \frac{(R_2 + R_3 + R_4)}{R_2}(R_1 + R_2) - I_2R_2 \quad \text{(4-49-4}$$

$$I_2 = \frac{V}{\frac{R_2 + R_3 + R_4}{R_2}(R_1 + R_2) - R_2} \quad \text{(4-49-5}$$

$$V_0 = I_2R_4 \quad \text{(4-49-6}$$

$$V_0 = V \frac{R_4}{\frac{(R_2 + R_3 + R_4)(R_1 + R_2)}{R_2} - R_2} \quad \text{(4-49-7}$$

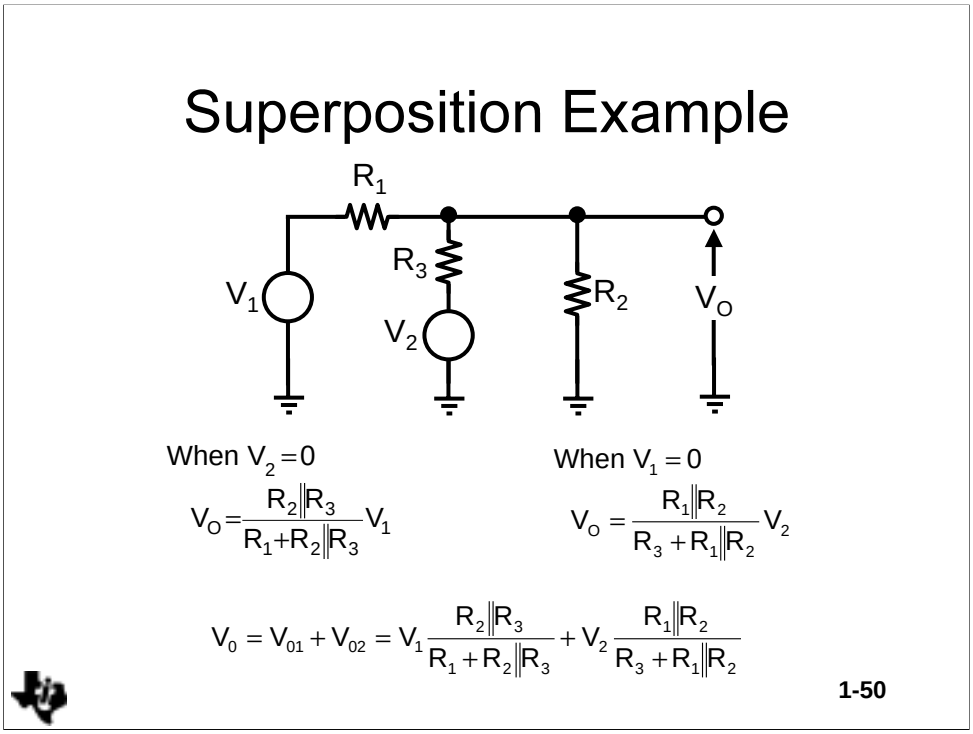

Superposition is a theorem that can be applied to any linear circuit. Essentially, when there are independent sources, the voltages and currents resulting from each source can be calculated separately, and the results are added algebraically. This simplifies the calculations because it keeps from having to write a series of loop or node equations.

When $V_2 = 0$ or is grounded, V_1 forms a voltage divider with R_1 and the parallel combination of R_2 and R_3. The voltage divider theorem yields the answer quickly. Likewise, when $V_1 = 0$, V_2 forms a voltage divider with R_3 and the parallel combination of R_1 and R_2, and the voltage divider theorem is applied again. After the calculations for each source are made the components are added to obtain the final solution.

The reader should analyze this circuit with loop or node equations, and then they are sure to become a fan of superposition. Again, the superposition results come out is a simple arrangement that is easy to understand. One looks at the final equation and it is obvious that if the sources are equal and opposite polarity, and $R_1 = R_3$, then the output voltage is zero. Conclusions such as this are hard to make after the results of a loop or node analysis unless considerable effort is made to manipulate the final equation into symmetrical form.

Saturated BJT Circuit

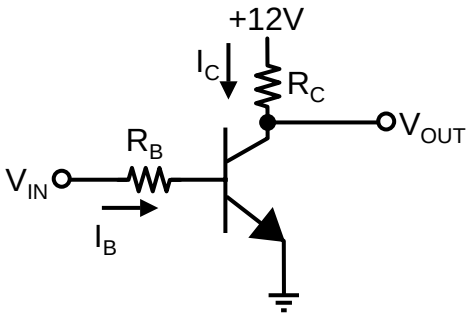

1-51

The high level collector equation is calculated in equation 4-51-1. Also, the minimum current gain is 30.

$$R_C = \frac{V_{+12} - V_{OUT}}{I_C} = \frac{12-10}{10}K = 200\Omega \qquad (4\text{-}51\text{-}1$$

The required base current is calculated in equation 4-51-2.

$$R_B \le \frac{(V_{+12} - V_{BE})\beta}{I_C} = \frac{(12-0.6)30}{10} = 34.2K \qquad (4\text{-}51\text{-}2$$

Resistor conditions: V_{IN} = 12V, V_{OUT} <0.2V

V_{IN} < 0.05V, V_{OUT} > 10V at I_C = 10mA

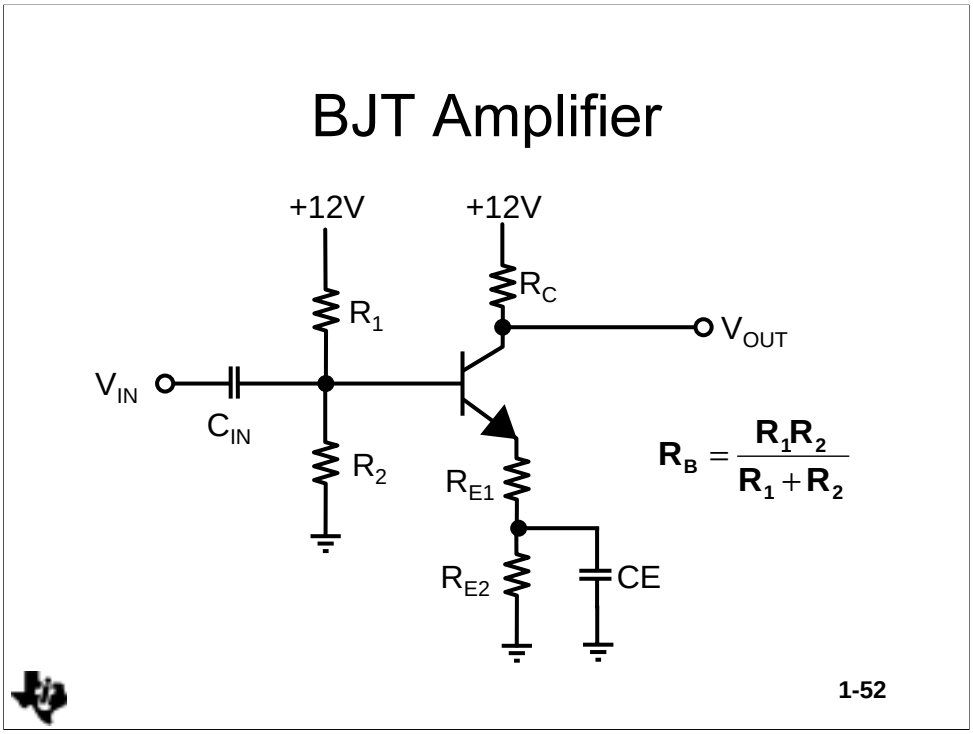

The specifications are for a stable amplifier which has a gain of four and output voltage swing of four volts peak-to-peak. The bias point is chosen as V_c=6V because this enables the transistor to swing positive 4 volts without cutting the transistor off. Let I_C = 10mA, the output signal is shown symmetrical, and the transistor has a minimum β_{ac} = 50 and β_{dc} 100.

$$R_C = \frac{V_{+12} - V_C}{I_C} = \frac{12 - 6}{10} = 600\Omega \qquad \text{(3-52-1}$$

Let V_{CE} = 6V so the transistor can swing negative four volts without saturating the transistor; then (R_{E1} + R_{E2}) = V_E/I_C = 600Ω. The base voltage must be $V_B = V_E + V_{BE} + I_B(R_B)$, so R_1 and R_2 are calculated to yield V_B and R_B. The ac gain equation is $G = R_C/R_{E1}$. Now R_{E1} and R_{E2} can be calculated.

This design makes numerous assumptions, but when β is high the assumptions are valid. Different types of transistors could be used for the amplifier, but similar assumptions can be made to speed their design. This amplifier has easy specifications, but it is hard to meet stringent specifications with a single transistor, thus integrated circuit amplifiers are used to do the hard jobs.

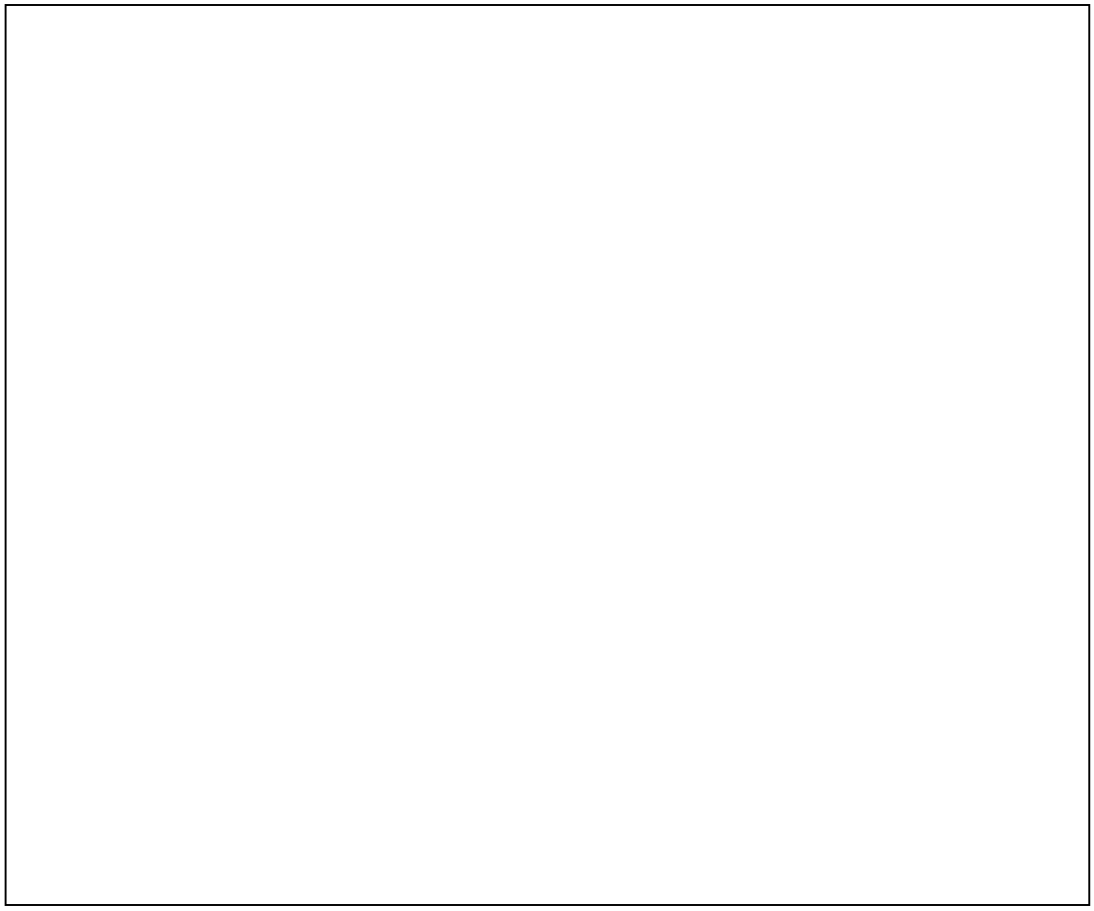

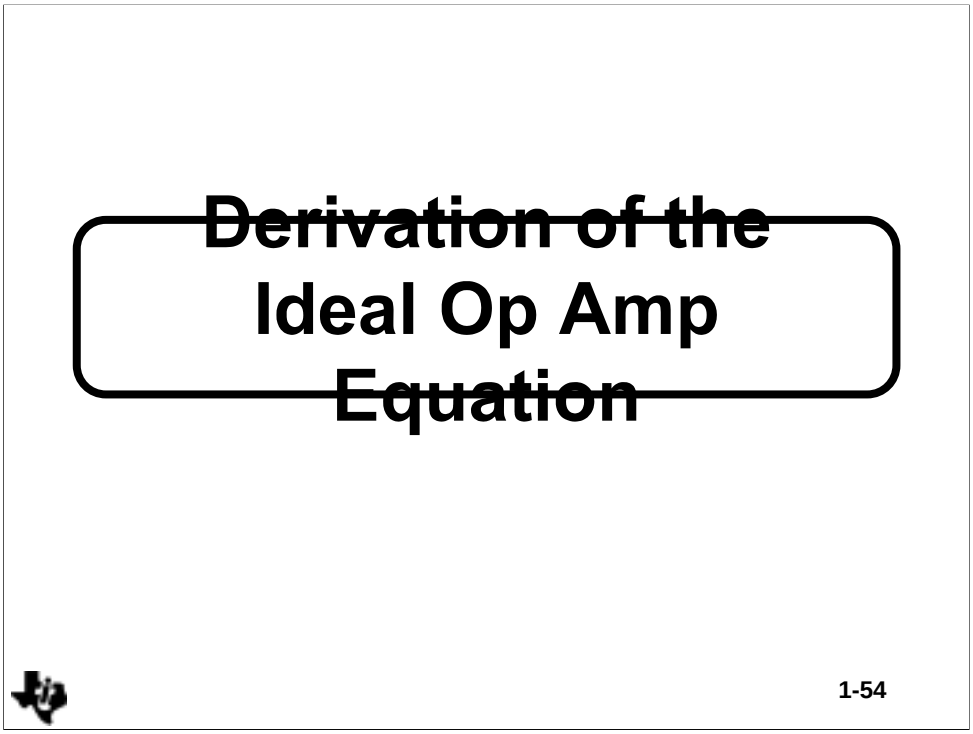

The name “Ideal Op Amp” is applied to this and similar analyses because the salient parameters of the op amp are assumed to be perfect. This assumption simplifies the analysis, thus it clears the path for insight. It is so much easier to see the forest when brush and huge trees do not surround you. Although the ideal op amp analysis makes use of perfect parameters, the analysis is often valid because some op amps approach perfection. Also, when working at low frequencies, several kHz, and low precision, the ideal op amp analysis produces accurate answers. Voltage feedback op amps are covered in this section, and current feedback op amps are covered in later sections.

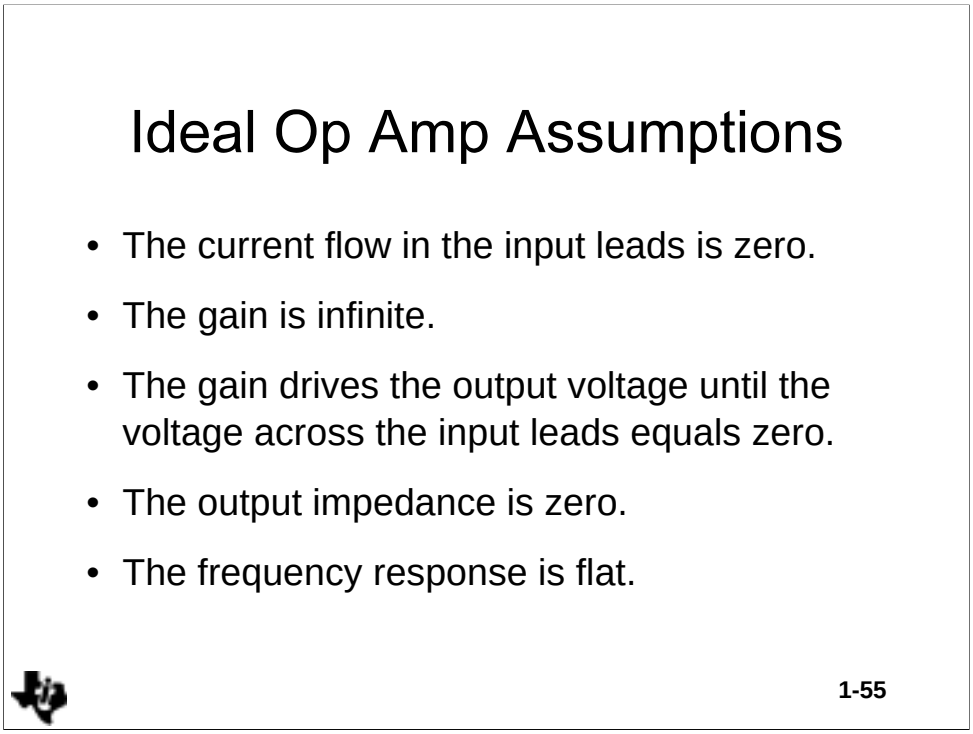

Several assumptions have to be made before the ideal op amp analysis can proceed. First assume that the current flow into the input leads is zero. This assumption is almost true in FET op amps where input currents can be less than a pA, but this is not always true in in bipolar high speed op amps where input currents in the tens of µA are found.

The gain is assumed to be infinite, hence it drives the output voltage to any value required to satisfy the input conditions. This assumes that the op amp output voltage can achieve any value, but saturation occurs when the output voltage comes close to a power supply rail. Reality doesn't negate the assumption; it only bounds it. Also, implicit in the infinite gain assumption is the need for a minuscule input signal.

The gain drives the output voltage until the voltage between the input leads (the error voltage) is extremely small. This leads to a further assumption that the voltage between the input leads is zero. The implication of zero voltage between the input leads means that if one input is tied to a hard voltage source such as ground the other input is at the same potential. There may be an offset voltage between the input leads, but it is ignored in this analysis. The current flow into the input leads is zero, so the input impedance of the op amp in infinite.

Two final assumptions are that the output impedance is zero, and that the frequency response is flat (does not vary as frequency changes). The output impedance of most op amps is a fraction of an ohm for low current flows, so this assumption is valid. By constraining the use of the op amp to the low frequencies, we make the frequency response assumption true.

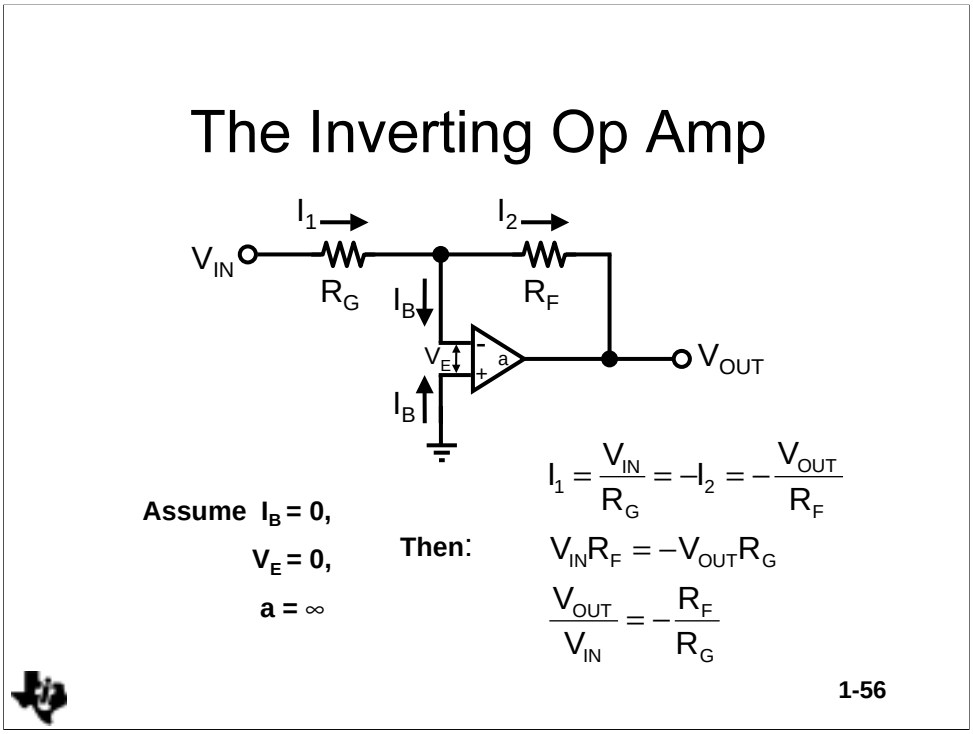

The non-inverting input of the inverting op amp is grounded, hence because of the assumption that the input error voltage is zero, the inverting input of the op amp is at ground (actually it is held at a virtual ground by the feedback). Also, the current flow in the input leads is assumed to be zero, so the current flowing through R_G equals the current flowing through R_F, and we can use Kirchoff's law to write equation 5-56-1.

Algebraic manipulation gives us equation 5-56-3. Notice that the output signal is only a function of the feedback and gain resistors, so the feedback has accomplished it's function of making the gain independent of the op amp parameters. The gain can be adjusted by varying the value of either resistor. One final note; the output signal is the input signal amplified and inverted. The input impedance is set by R_G because the inverting input lead is held at a virtual ground.

(5-56-1 $$I_1 = \frac{V_{IN}}{R_G} = -I_2 = -\frac{V_{OUT}}{R_F}$$

(5-56-2 $$V_{IN}R_F = -V_{OUT}R_G$$

(5-56-3 $$\frac{V_{OUT}}{V_{IN}} = -\frac{R_F}{R_G}$$

The Non-Inverting Op Amp

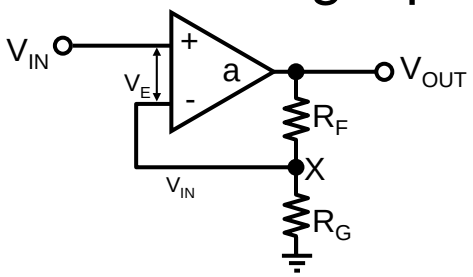

$$V_{IN} = \frac{V_{OUT} R_G}{R_F + R_G}$$

$$\frac{V_{OUT}}{V_{IN}} = \frac{R_F + R_G}{R_G}$$

1-57

The non-inverting op amp has the input signal attached to its non-inverting input, thus the input impedance is infinite. Because the input leads have no current flow V_E = 0, and V_{IN} appears across R_G. The voltage divider rule is used with V_{OUT} being the input and V_{IN} being the output. Equation 5-57-1 is written with the aid of the voltage divider rule, and algebraic manipulation gives equation 5-57-2 in the form of a gain parameter

When R_G becomes very large with respect to R_F equation 5-57-1 reduces to V_{OUT} = 1, or the circuit is turned into a unity gain buffer. Of course, R_G can be deleted to achieve the same results, and when R_G is deleted R_F can be deleted. Some op amps are self-destructive when R_F is left out of the circuit, so it shows up in many designs. R_F can never be left out of the circuit in a current feedback amplifier design because R_F determines stability in current feedback amplifiers.

(5-57-1

$$V_{IN} = \frac{V_{OUT} R_G}{R_F + R_G}$$

(5-57-2

$$\frac{V_{OUT}}{V_{IN}} = \frac{R_F + R_G}{R_G}$$

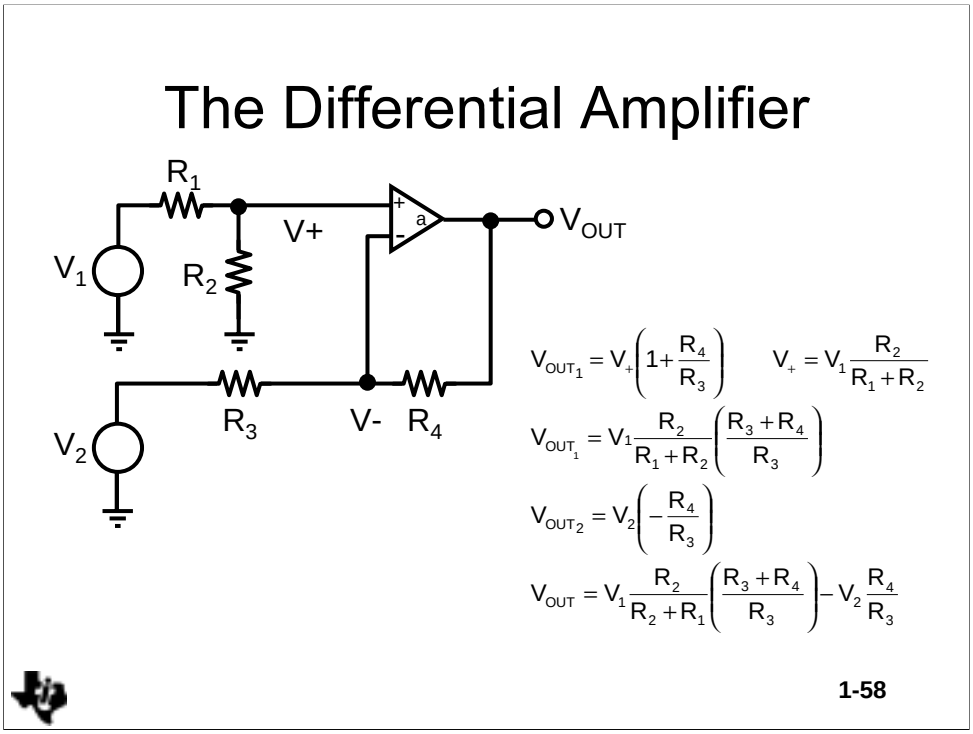

The differential amplifier amplifies the difference signal applied to the input circuit, and it rejects the common mode portion of the input. This circuit configuration is often employed to strip dc or injected common mode noise off a signal. Superposition is used to calculate the output voltage resulting from each input voltage, and then the two output voltages are added to arrive at the final output voltage.

The output voltage resulting from V_1 is calculated in equation 5-58-1. The voltage divider rule is used to calculate V_+, and the non-inverting gain equation is used to calculate the stage gain. The inverting gain equation is used to calculate the stage gain for V_2 in equation 5-58-3. These gains are added in equation 5-58-4.

$$V_{OUT_1} = V_+\left(1+\frac{R_4}{R_3}\right) \qquad V_+ = V_1\frac{R_2}{R_1+R_2} \tag{5-58-1}$$

$$V_{OUT_1} = V_1\frac{R_2}{R_1+R_2}\left(\frac{R_3+R_4}{R_3}\right) \tag{5-58-2}$$

$$V_{OUT_2} = V_2\left(-\frac{R_4}{R_3}\right) \tag{5-58-3}$$

If we let $R_2 = R_4$ and $R_1 = R_3$, equation 5-5-4 reduces to $V_{OUT} = (V_1 - V_2)(R_4/R_3)$. It is now obvious that the differential signal, $(V_1 - V_2)$, is multiplied by the stage gain. The disadvantage of this circuit is that the two input impedances can't be matched and have it act as a differential amplifier, thus there is a two op amp version of this circuit specially designed for high performance differential applications.

$$V_{OUT} = V_1 \frac{R_2}{R_2 + R_1}\left(\frac{R_3 + R_4}{R_3}\right) - V_2 \frac{R_4}{R_3} \quad (5\text{-}5\text{-}4)$$

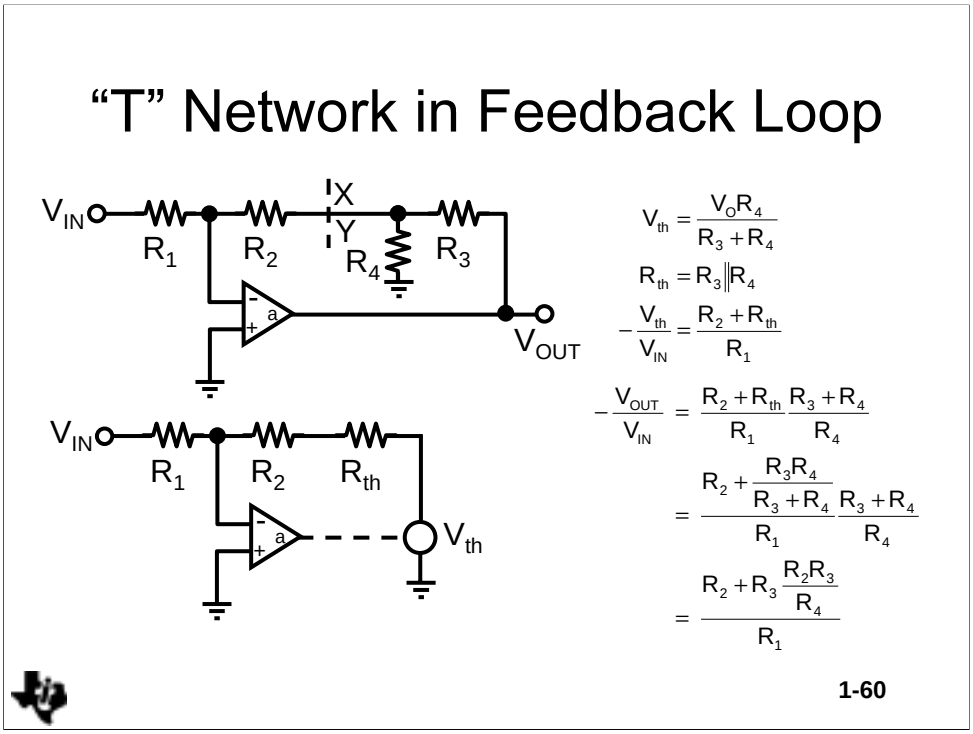

Sometimes it is desirable to have a low resistance path to ground in the feedback loop. Standard inverting op amps can't do this when the driving circuit sets the input resistor value, and the gain specification sets the feedback resistor value. Inserting a "T" network in the feedback loop yields a degree of freedom that enables both specifications to be met with a low dc resistance path in the feedback loop.

Break the circuit at point X-Y, and calculate the Thevenin equivalent voltage as shown in equation 5-60-1. The Thevenin equivalent is impedance calculated in equation 5-60-2. Replace the output circuit with the Thevenin equivalent circuit, and calculate the gain with the aid of the inverting gain equation as shown in equation 5-60-3.

(5-60-1
$$V_{th} = \frac{V_O R_4}{R_3 + R_4}$$

(5-60-2
$$R_{th} = R_3 \| R_4$$

(5-60-3
$$-\frac{V_{th}}{V_{IN}} = \frac{R_2 + R_{th}}{R_1}$$

Substituting the Thevenin equivalents into equation 5-60-3 yields equation 5-60-4 (see page 5-8).

$$-\frac{V_{OUT}}{V_{IN}} = \frac{R_2 + R_{th}}{R_1}\frac{R_3 + R_4}{R_4}$$

(5-7-4

$$= \frac{R_2 + \dfrac{R_3 R_4}{R_3 + R_4}}{R_1}\frac{R_3 + R_4}{R_4}$$

$$= \frac{R_2 + R_3\dfrac{R_2 R_3}{R_4}}{R_1}$$

Specifications for the circuit you are required to build are an inverting amplifier with an input resistance of 10K (R_G = 10K), a gain of 100, and a feedback resistance path to ground of 20K or less. The inverting op amp circuit can't meet these specifications because R_F must equal 1000K. Inserting a "T" network with R_2 =R_4= 10K and R_3 = 445K does meet the specifications.

Video Amplifier

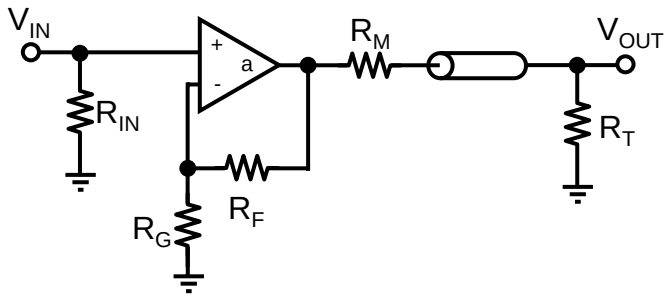

$$\frac{V_{OUT}}{V_{IN}} = \frac{R_F + R_G}{R_G}\frac{R_T}{R_M + R_T}$$

1-62

Video signals contain high frequencies, and the cable connecting the circuits has a characteristic impedance of 75Ω, so the input and output circuit impedances should be 75Ω to match the cable. Matching the cable impedance is required to prevent reflections because reflections cause severe disturbances in video signals.

Matching the input impedance is simple for a non-inverting amplifier because its input impedance is very high; just make R_{IN} = 75Ω. R_F and R_G can be selected as very high values, in the KΩ range, so that they won't affect the output circuit. A resistor, R_M, is placed in series with the op amp output to raise its output impedance to 75Ω, a terminating resistor, R_T, is placed at the input of the next stage to match the cable. The matching and terminating resistors are equal in value, and they form a voltage divider of ½. Very often R_F is selected equal to R_G so that the system gain is equal to one (2 x ½ = 1).

$$\frac{V_{OUT}}{V_{IN}} = \frac{R_F + R_G}{R_G}\frac{R_T}{R_M + R_T}$$

AC Theory

- Inductors are not considered.
- Capacitors have an impedance equal to:

$$X_C = \frac{1}{2\pi fC}$$

- If f goes to zero X_C becomes infinite.
- If f goes to infinity X_C becomes zero.



1-63

Capacitors are a key component in a circuit designer's toolkit, thus a short discussion on evaluating their effect on circuit performance is in order. Capacitors have an impedance of $X_C = 1/(2\pi fC)$. Note that when the frequency is zero the capacitive impedance (also known as reactance) is zero, and that when the frequency is infinite the capacitive impedance is zero.

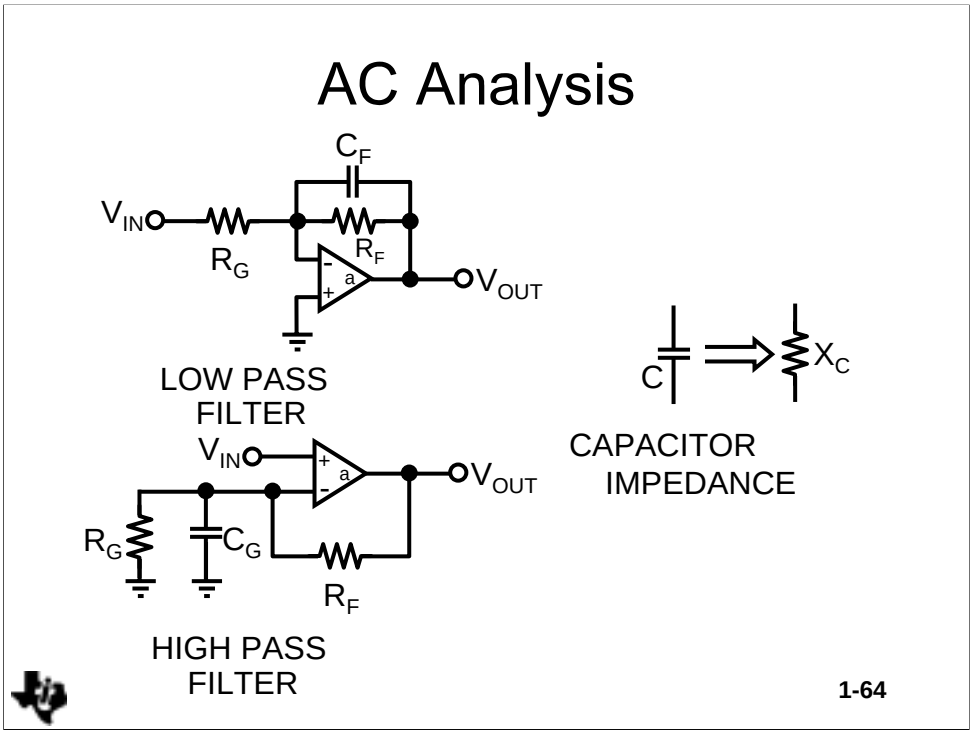

The low pass filter circuit has a capacitor in parallel with the feedback resistor. At very low frequencies $X_C \Rightarrow \alpha$, so the capacitor has no effect. At very high frequencies $X_C \Rightarrow 0$, so the feedback resistor is shorted out thus reducing the circuit gain to one. At the frequency where $X_C = R_F$ the gain is reduced to half.

Connecting the capacitor in parallel with R_G where it has the opposite effect can make a high pass filter. This simple technique is used to predict the form of a circuit transfer function rapidly. Better analysis techniques are presented later for those applications requiring more precision.

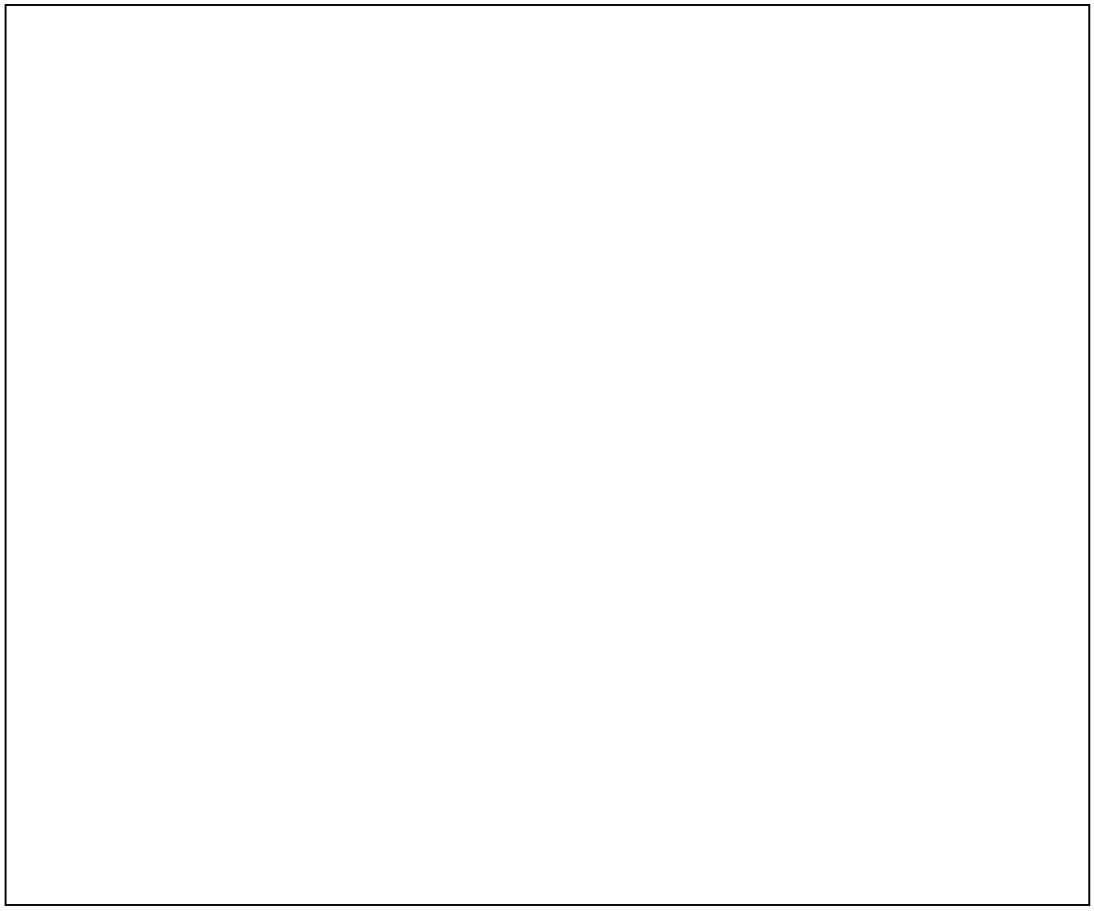

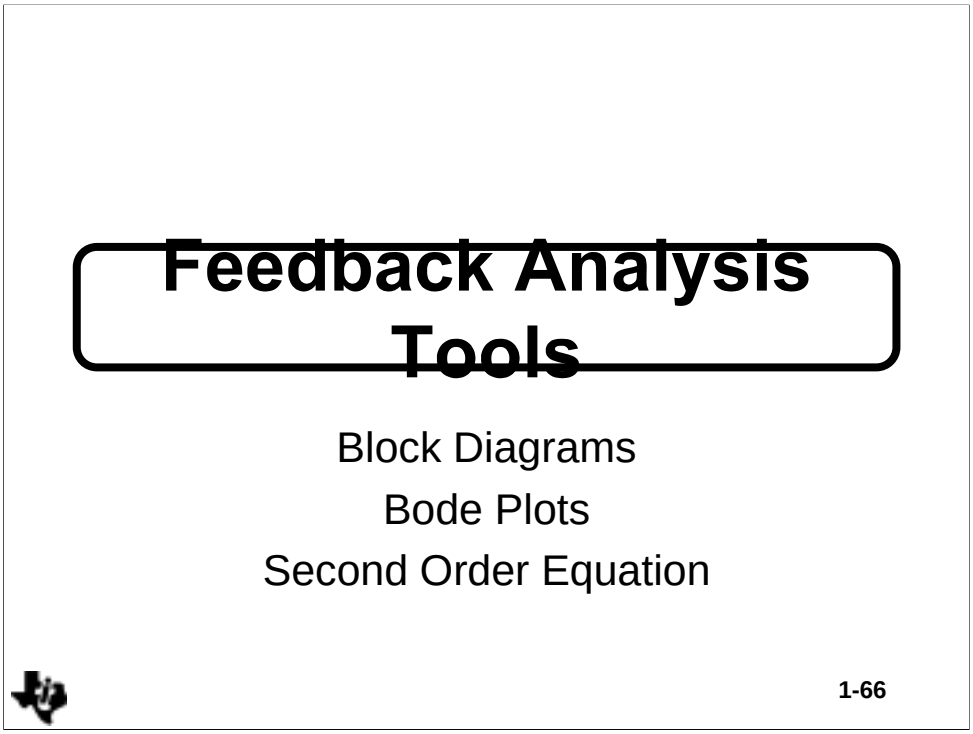

Analysis tools have something in common with medicine because they both can be distasteful but necessary. Medicine often tastes bad or has undesirable side effects, and analysis tools involve lots of hard learning work before they can be applied to yield results. Medicine gives your body assistance in fighting an illness; analysis tools give your brain assistance in learning/designing feedback circuits.

The analysis tools given here are a synopsis of the salient points, thus they are detailed enough to get you where you are going without any extras. The references along with thousands of their counterparts must be consulted when making an in depth study of the field. Aspirin, home remedies, and good health practice handle the majority of health problems, and these analysis tools solve the majority of circuit problems.

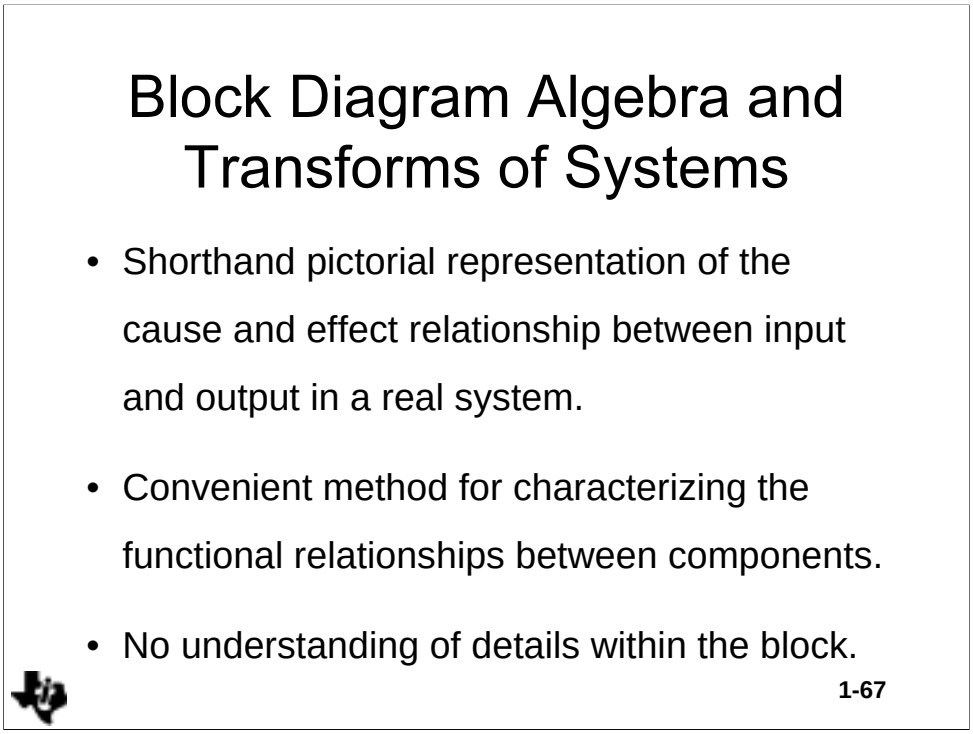

Block diagrams have a unique algebra and set of transformations, and they are used to represent electronic systems and circuits. The block diagrams are used because they are a shorthand pictorial representation of the cause and effect relationship between the input and output in a real system. They are a convenient method for characterizing the functional relationships between components. You do not need to understand the functional details of a block to manipulate a block diagram.

Blocks

- Input impedance is high — no loading
- Output impedance is zero — high fan-out
- Arrows show signal flow
- Blocks do all math except add and subtract

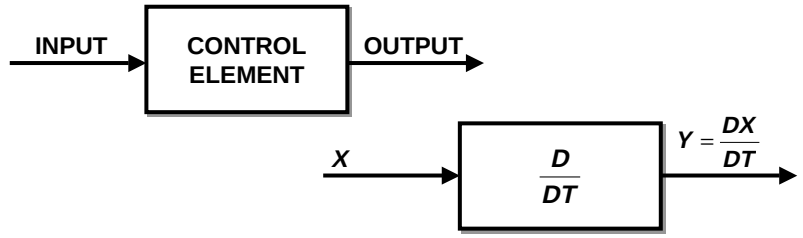

1-68

The input impedance of each block is assumed to be infinite to preclude loading. Also, the output impedance of each block is assumed to be zero to enable high fan-out. The systems designer sets the actual impedance levels, but the fan-out assumption is valid because the block designers adhere to the system designer's specifications. All blocks multiply the input times the block quantity unless otherwise specified within the block. The quantity within the block can be a constant, or it can be a complex math function involving LaPlace transforms. The blocks can perform time-based operations such as differentiation and integration.

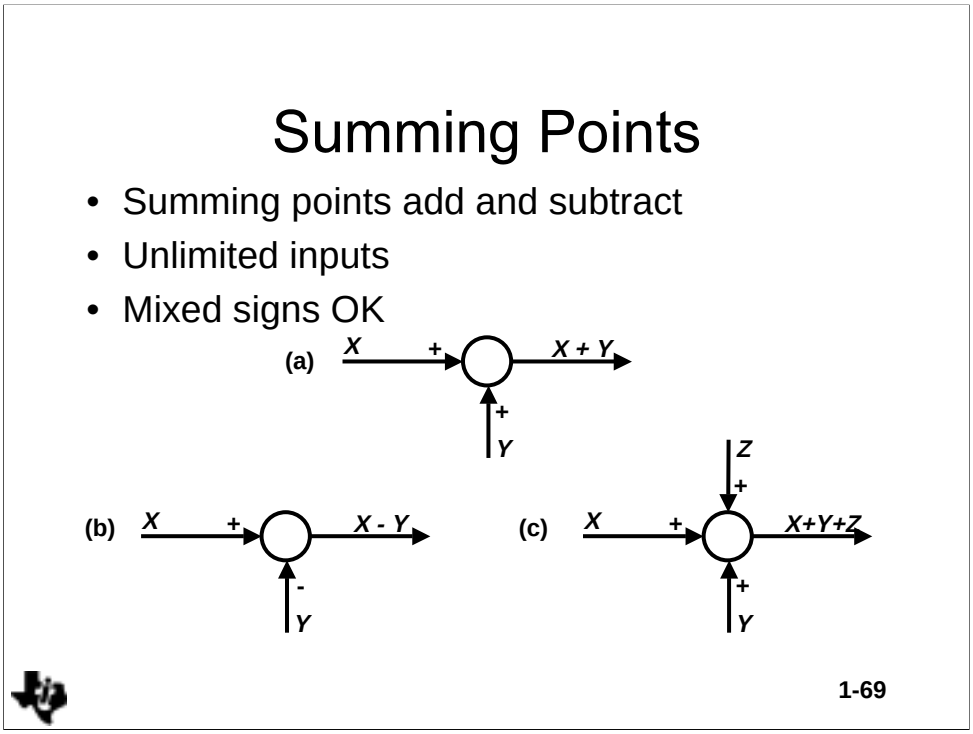

Adding and subtracting are performed in special blocks called summing points. Several examples of summing points are given in the figure. Please note that summing points have unlimited inputs, they can add or subtract, and they can have mixed signs yielding addition and subtraction within a single summing point.

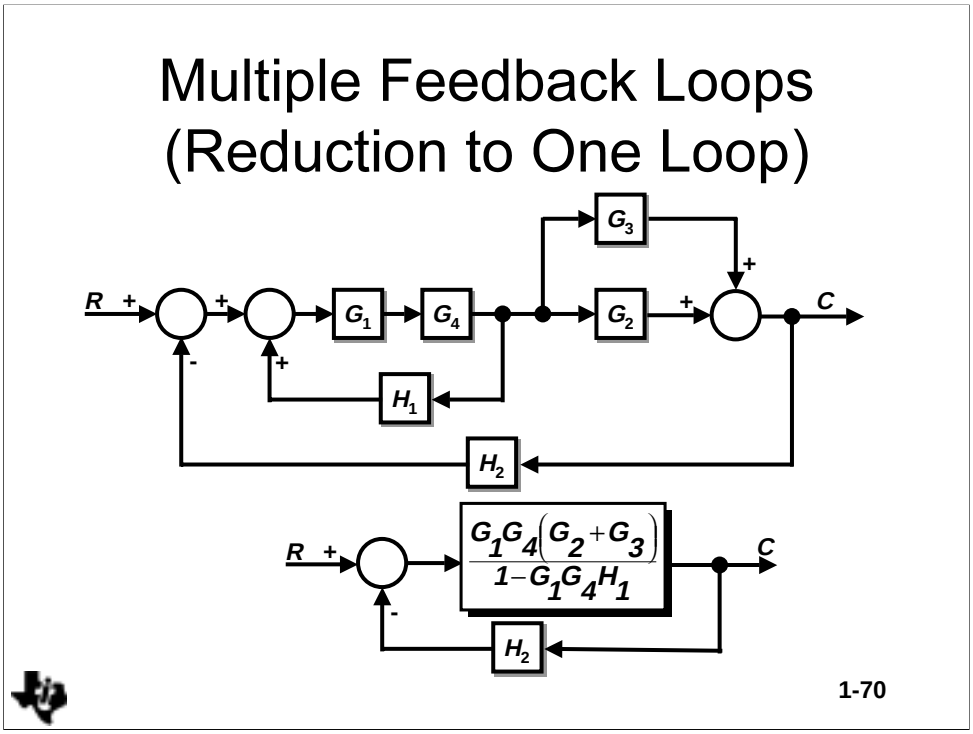

Multiple loop feedback systems are intimidating, but they can be reduced to a single loop feedback system by writing equations and solving for V_{OUT}/V_{IN}. The equation for each point in the loop is written, and the equations are solved to obtain the simplified result. Reducing multiple loops to a single loop loses some information, but when you are interested in a single parameter such as stability the lost information has no value.

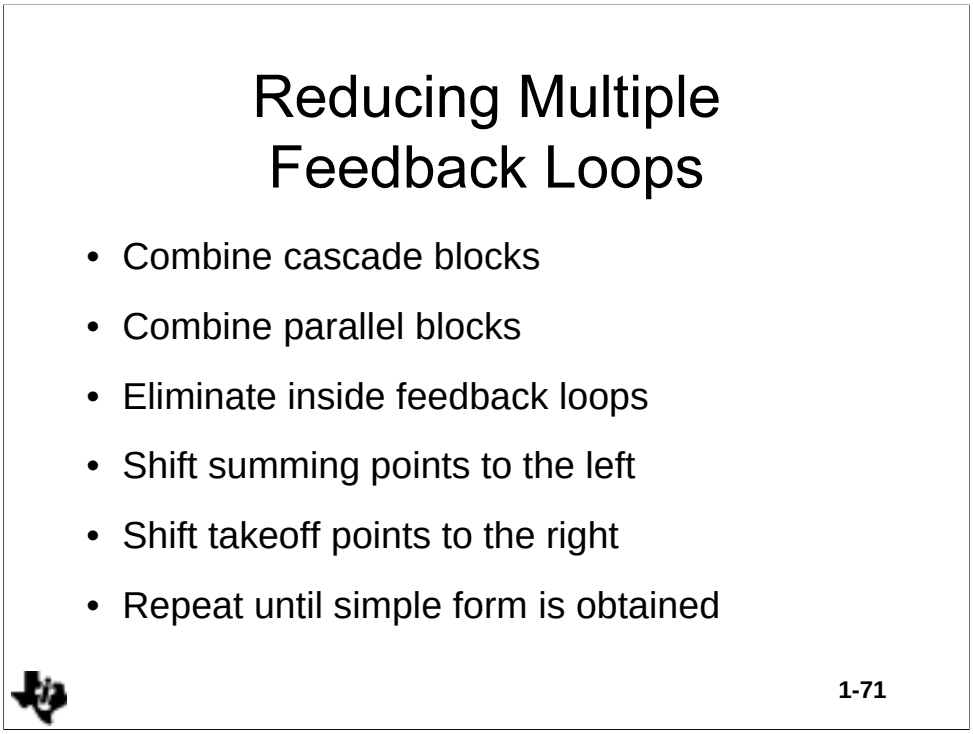

Follow the rules given below to reduce multiple loop feedback systems to single loop feedback systems.

The block diagram reduction rules are:

- Combine cascade blocks.
- Combine parallel blocks.
- Eliminate interior feedback loops.
- Shift summing points to the left.
- Shift takeoff points to the right.

Repeat until canonical form is obtained.

The Canonical Feedback Loop

- The simplest form of the feedback loop
- Easy to analyze
- All feedback loops can be reduced to this form
- The canonical feedback loop exists for each input
- The response of each input can be analyzed separately



1-72

The idea behind the block diagram effort is to reduce the diagram to its canonical form because we know a lot about that form. The canonical feedback loop is the simplest form of a feedback loop, and its analysis is well documented. All feedback systems can be reduced to the canonical form, so all feedback systems can be analyzed with the same math. Be aware that a canonical loop exists for every input to a feedback system. Although the stability dynamics are independent of the input, the output performance is input dependent. Each input response in a multiple input feedback system can be analyzed separately, and then they are added through superposition to obtain the final response.

The Feedback Equation (Control Theory)

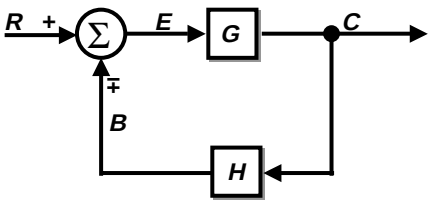

$$\frac{C}{R} = \frac{G}{1 \pm GH}$$

$$\frac{E}{R} = \frac{1}{1 \pm GH}$$

$$\frac{B}{R} = \frac{GH}{1 \pm GH}$$

1-73

The canonical form of a feedback loop is shown with control system and electronic system terms. The nomenclature of the variables, G or A, make no difference except to the system engineers, but the math does have meaning, and it is identical for both types of terms. The electronic terms and negative feedback sign are used in this analysis because subsequent application notes deal with electronic applications.

The Feedback Equation (Circuit Theory)

$$\mathbf{V_{OUT}} = \mathbf{EA}$$

$$\mathbf{E} = \mathbf{V_{IN}} - \beta\mathbf{V_{OUT}}$$

$$\mathbf{E} = \frac{\mathbf{V_{OUT}}}{A}$$

$$\frac{\mathbf{V_{OUT}}}{\mathbf{V_{IN}}} = \frac{\mathbf{A}}{(1+A\beta)}$$

$$\frac{\mathbf{E}}{\mathbf{V_{IN}}} = \frac{\mathbf{1}}{(1+A\beta)}$$

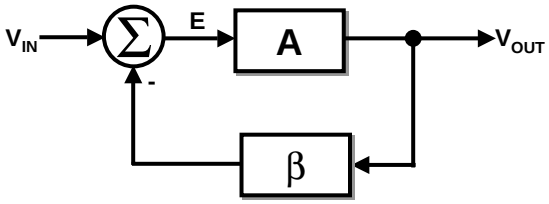

1-74

The output equation and error equation are written below.

$$E = V_I - \beta V_O , \quad V_{OUT} = EA$$

Combining these equations yields;

$$\frac{V_{OUT}}{A} = V_{IN} - \beta V_{OUT}$$

Rearranging terms puts the equation in recognizable form.

$$V_{OUT}\left(\frac{1}{A} + \beta\right) = V_{IN}$$

This is the classic form of the feedback equation.

$$\frac{V_{OUT}}{V_{IN}} = \frac{A}{1+A\beta}$$

$$\left.\frac{V_{OUT}}{V_{IN}}\right|_{A\beta>>1} = \frac{1}{\beta}$$

Please notice that when the term, Aβ, in equation becomes large with respect to one the equation reduces to the ideal feedback equation, and it finds extensive use when amplifiers are assumed to have ideal qualities. Under the conditions that Aβ>>1, the system gain is determined by the feedback factor β. Stable passive circuit components are used to implement the feedback factor, thus in the ideal situation, the closed loop gain is predictable and stable because β is stable and predictable.

Determining Stability

$$1 + A\beta = 0$$

$$A\beta = -1 = \frac{|1|}{\angle -180}$$

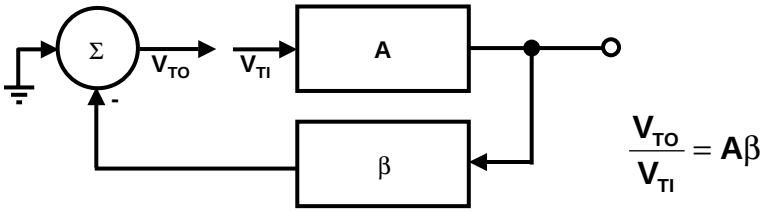

$$\frac{V_{TO}}{V_{TI}} = A\beta$$

Block Diagram For Computing The Loop Gain



1-75

The quantity Aβ is so important that it has been given a special name, loop gain. Consider the figure; when the voltage inputs are grounded (current inputs are opened) and the loop is broken the calculated gain is the loop gain, Aβ. Now, keep in mind that this is a mathematics of complex numbers which have magnitude and direction. When the loop gain approaches minus one, or to express it mathematically $1\angle 180^o$, equation 7-1-5 approaches infinity because $1/0 \Rightarrow \infty$. The circuit output heads for infinity as fast as it can using the equation of a straight line. If the output were not energy limited the circuit would explode the world, but it is energy limited by the power supplies so the world stays intact.

Active devices in electronic circuits exhibit non-linear behavior when their output approaches a power supply rail, and the non-linearity reduces the amplifier gain until the loop gain no longer equals $1\angle 180^o$. Now the circuit can do two things: first it could become stable at the power supply limit, or second, it can reverse direction (because stored charge keeps the output voltage changing) and head for the negative power supply rail.

The first state where the circuit becomes stable at a power supply limit is named lockup; the circuit will remain in the locked up state until power is removed. The second state where the circuit bounces between power supply limits is named oscillatory. Remember, the loop gain, Aβ, is the sole factor that determines stability for a circuit or system. Inputs are grounded or disconnected when the loop gain is calculated, so they have no affect on stability.

Bode Plots

- Developed by H.W. Bode in 1945.
- Bode plots are log plots.
- Uses logs so equations can be added and subtracted graphically.
- 20Log(F(t)) = 20Log|F(t)| + Phase Angle



1-76

H. W. Bode developed a quick, accurate, and easy method of analyzing feedback amplifiers, and he published a book about his techniques in 1945. Op amps had not been developed when Bode published his book, but they fall under the general classification of feedback amplifiers, so they are easily analyzed with Bode techniques. The mathematical manipulations required to analyze a feedback circuit are complicated because they involve multiplication and division. The Bode plot simplifies the analysis through the use of graphical techniques.

The Bode equations are log equations which take the form 20LOG(F(t)) = 20LOG($|F(t)|$) + phase angle. Taking the log of a function breaks the function into its component parts; the magnitude and the phase. Terms that are normally multiplied and divided can now be added and subtracted because they are log equations. The addition and subtraction is done graphically, thus easing the calculations and giving the designer a pictorial representation of circuit performance.

Integrator Circuit

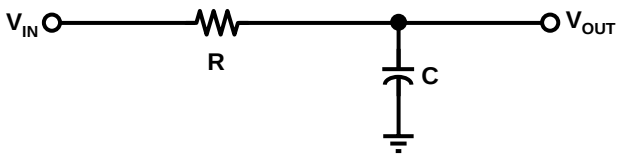

$$\frac{V_{OUT}}{V_{IN}} = \frac{1}{(1+\tau s)}$$

Where $s = j\omega$, $j = \sqrt{-1}$ and $\tau = RC$

1-77

The equation for the low pass filter is written below:

$$\frac{V_{OUT}}{V_{IN}} = \frac{1}{1+RCs} = \frac{1}{1+\ s}$$

Where τ = RC, and $j = \sqrt{(-1)}$

The magnitude of this transfer function is $|V_{OUT}/V_{IN}| = 1/\sqrt{(1+(\tau\omega)^2)}$

The magnitude equals $|V_{OUT}/V_{IN}|$ when ω = 0.1; it equals 0.707 when $\omega = 1/\tau$, and it equals 0.1 when $\omega = 10/\tau$.

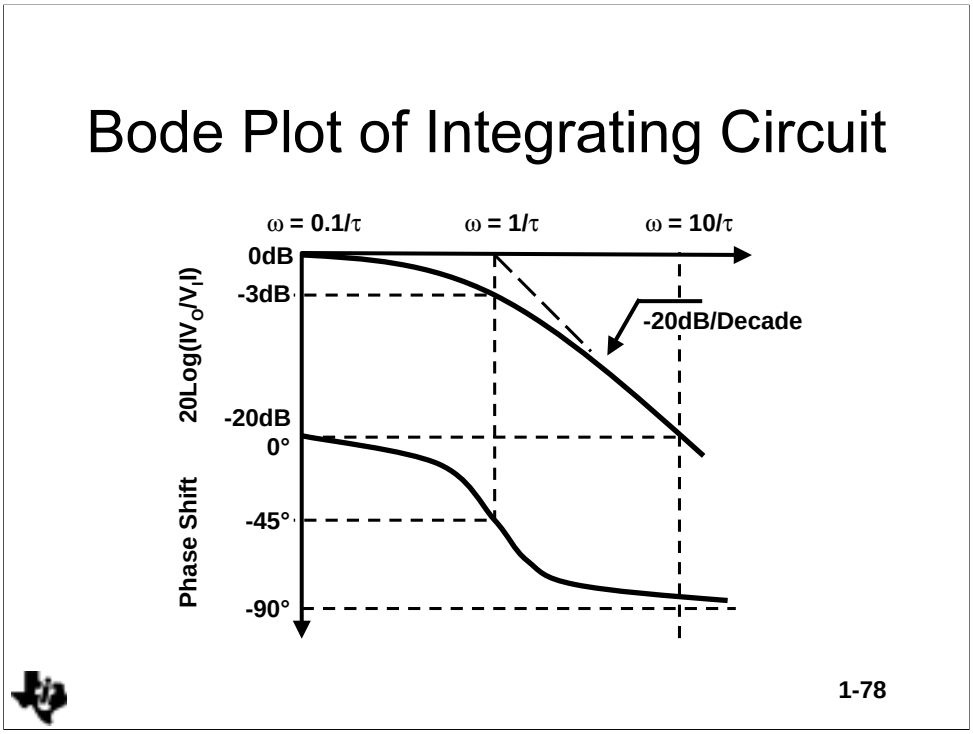

These points are plotted in figure 4-2 using straight-line approximations. The negative slope is -20dB/decade or -6dB/octave. The magnitude curve is plotted as a horizontal line until it intersects the breakpoint where $\omega = 1/\tau$. The negative slope begins at the breakpoint because the magnitude decreases rapidly at that point. The gain is equal to 1 or 0dB at very low frequencies, equal to 0.707 or -3db at the break frequency, and it keeps falling with a -20db/decade slope for higher frequencies.

The phase shift for the low pass filter or any other transfer function is calculated as shown below:

$$\phi = \tan^{-1}\left(\frac{1}{\omega\tau}\right)$$

The phase shift is much harder to draw on a Bode plot because the tangent function is non-linear. The phase information around the 0dB intercept point yields the stability information for an active circuit, so the phase calculations are only done at the point near the 0dB crossover. The phase is approximated by remembering that the tangent of 90º is 1, the tangent of 60º is $\sqrt{3}$, and the tangent of 30º is $\sqrt{3}/3$.

A breakpoint occurring in the denominator is called a pole, and it slopes down. Conversely, a breakpoint occurring in the numerator is called a zero, and it slopes up. When the transfer function has multiple poles and zeros, each pole or zero is plotted independently, and the individual poles/zeros are added graphically. If multiple poles, zeros, or a pole/zero combination have the same breakpoint they are plotted on top of each other. Multiple poles or zeros cause the slope to change by 0dB/decade, 20dB/decade, 40db/decade, or more.

Band Reject Filter

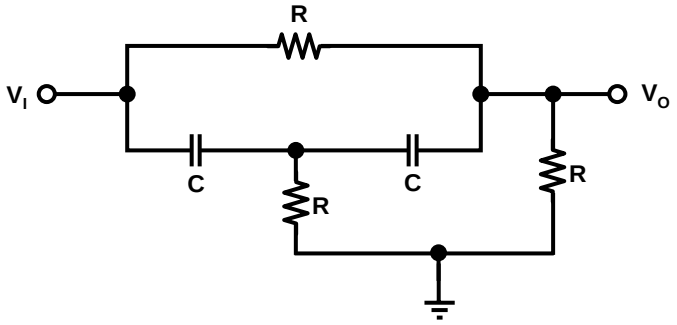

$$\frac{V_o}{V_I} = \frac{(1+\tau s)(1+\tau s)}{2(1+\tau s/0.44)(1+\tau s/4.56)}$$

Where $s = j\omega$ and $RC = \tau$

1-79

An example of a transfer function with multiple poles and zeros is a band reject filter. The transfer function of the band reject filter is given below.

$$G = \frac{V_{OUT}}{V_{IN}} = \frac{(1+\tau s)(1+\tau s)}{2\left(1+\frac{\tau s}{0.44}\right)\left(1+\frac{\tau s}{4.56}\right)}$$

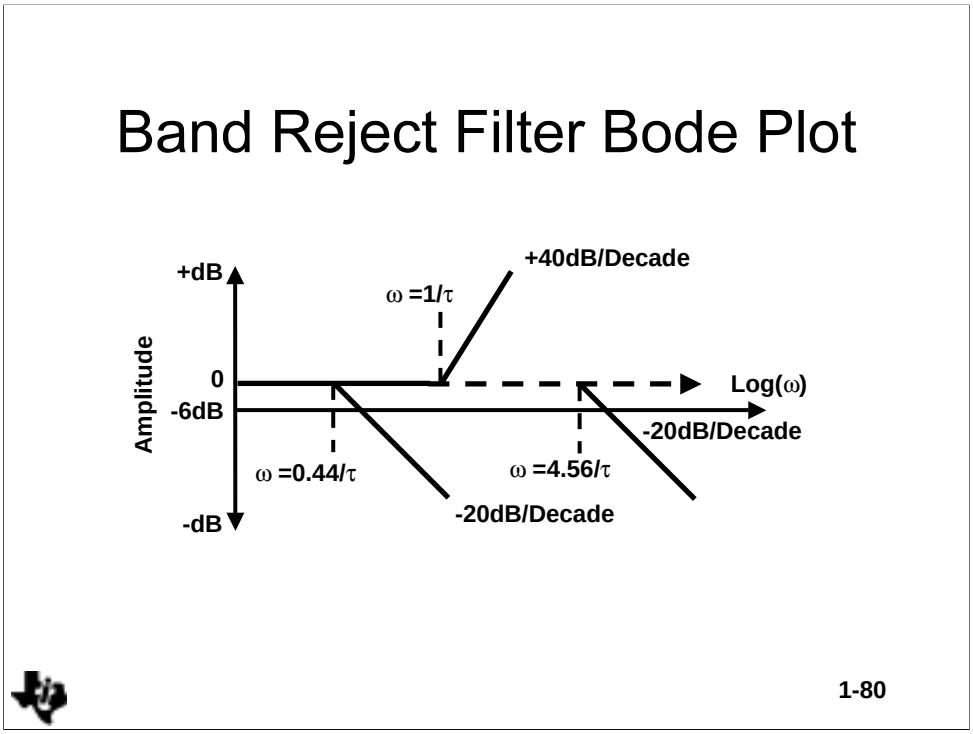

The individual plots show the dc gain of 1/2 plotting as a straight line from the –6dB intercept. The two zeros occur at the same break frequency. Thus they are plotted with a +40db/decade slope. The two poles are plotted at their breakpoints of 0.44 and 4.56, and each pole has a –20dB/decade slope.

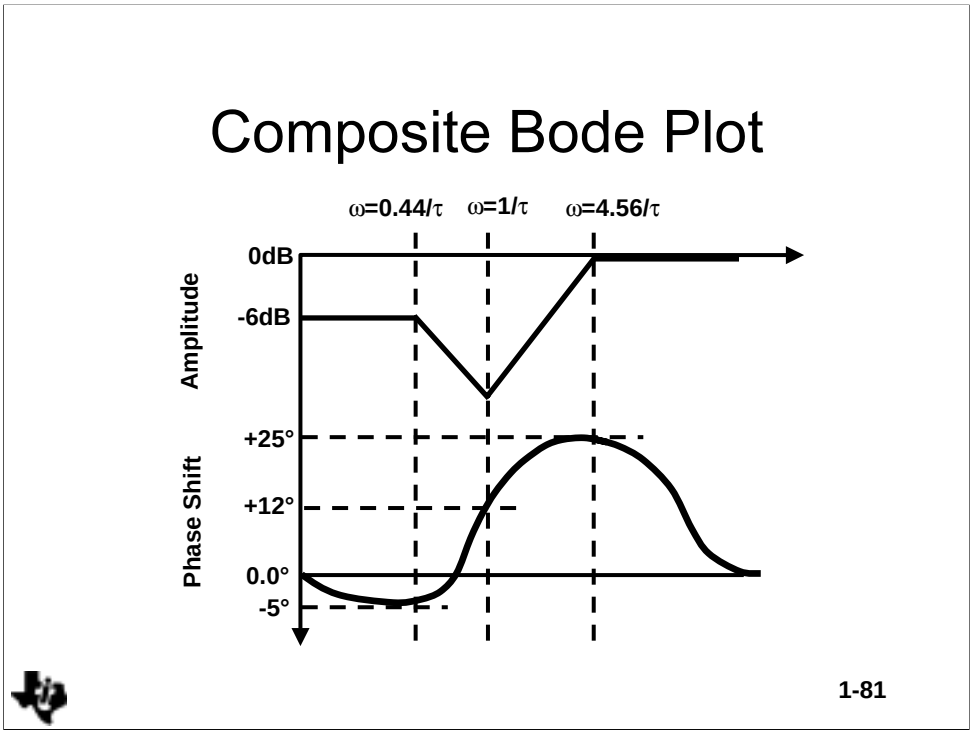

The dc gain causes the amplitude of the combined plot to intercept the axis at -6dB, and it breaks down when it reaches the first pole, $\omega = 0.44/\tau$. When the amplitude function gets to the double zero at $\omega = 1/\tau$, the first zero cancels out the pole, and the second zero breaks up resulting in a slope of 20dB/decade. The upward slope continues until the second pole cancels out the second zero at $\omega = 4.56/\tau$, and the amplitude is flat from that point out in frequency.

When the separation between pole zero combinations is a decade or more in frequency, it is easy to draw the Bode plot because there is little interaction between the poles and/or zeros. As the poles and/or zeros get closer together the plot gets harder to make because their interaction around the break points caused by the closeness magnifies the -3dB breakpoint error. The phase is especially hard to plot because it is a tangent function, but picking a few salient points and sketching them in first gets you a pretty good approximation. The Bode plot enables the designer to get a good idea of pole zero placement, and it is valuable for fast evaluation of possible compensation techniques. When the situation gets critical, accurate calculations must be made and plotted to insure that the plot represents the true situation.

When Gain is Independent of Frequency

$$\frac{V_O}{V_I} = \frac{A}{1 + A\beta}$$

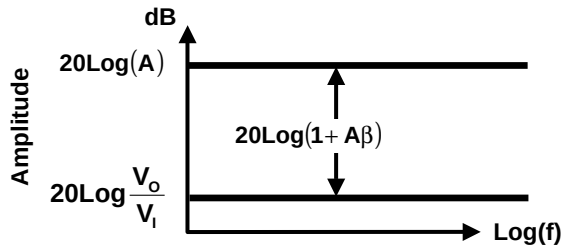

1-82

Consider this equation:

$$\frac{V_{OUT}}{V_{IN}} = \frac{A}{1 + A\beta}$$

Taking the log of this equation yields

$$20\text{Log}(V_{OUT}/V_{IN}) = 20\text{Log}|A| - 20\text{Log}|1 + A\beta|$$

If A and β do not contain poles or zeros there are no break points. Then the Bode plot is flat, and because there are no poles or zeros to contribute phase shift, the circuit can't oscillate.

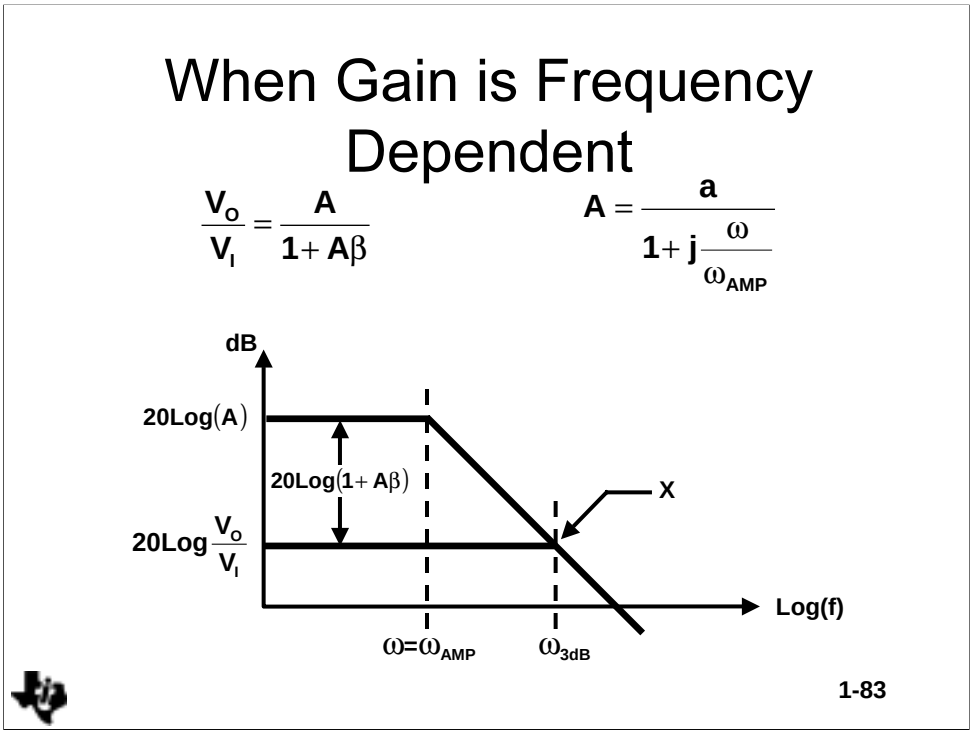

All real op amps have many poles, and some op amps have little or no internal compensation, so these op amps must be externally compensated to prevent oscillation. A different breed of op amp is internally compensated so that they appear to have a single pole. Beware, these op amps only appear to have a single pole, and at high frequencies they may accumulate as much as 155° phase shift before the gain intercepts the 0dB axis. Such an amplifier would have an approximate equation similar to that given below. $A = \frac{a}{1 + j\frac{\omega}{\omega_a}}$

The amplifier gain, A, intercepts the axis at 20Log(A), and it breaks down at a slope of -20dB/decade at $\omega = \omega_a$. The negative slope continues for all frequencies greater than the breakpoint, $\omega = \omega_a$. The closed loop circuit gain intercepts the axis at $20\text{Log}(V_{OUT}/V_{IN})$, and because β does not have any poles or zeros, the closed loop circuit gain is constant until it's projection intersects the amplifier gain at point X. After intersection with the amplifier gain curve, the closed loop gain follows the amplifier gain because the amplifier becomes the controlling factor.

Actually, the closed loop gain starts to roll off earlier, and it is down 3dB at point X. At point X the difference between the closed loop gain and the amplifier gain is -3dB, thus the term $-20\text{Log}|1+A\beta| = -3\text{dB}$. The magnitude of 3dB is $\sqrt{2}$, hence $\sqrt{1+(A\beta)^2} = \sqrt{2}$ and elimination of the radicals shows that $A\beta = 1$.

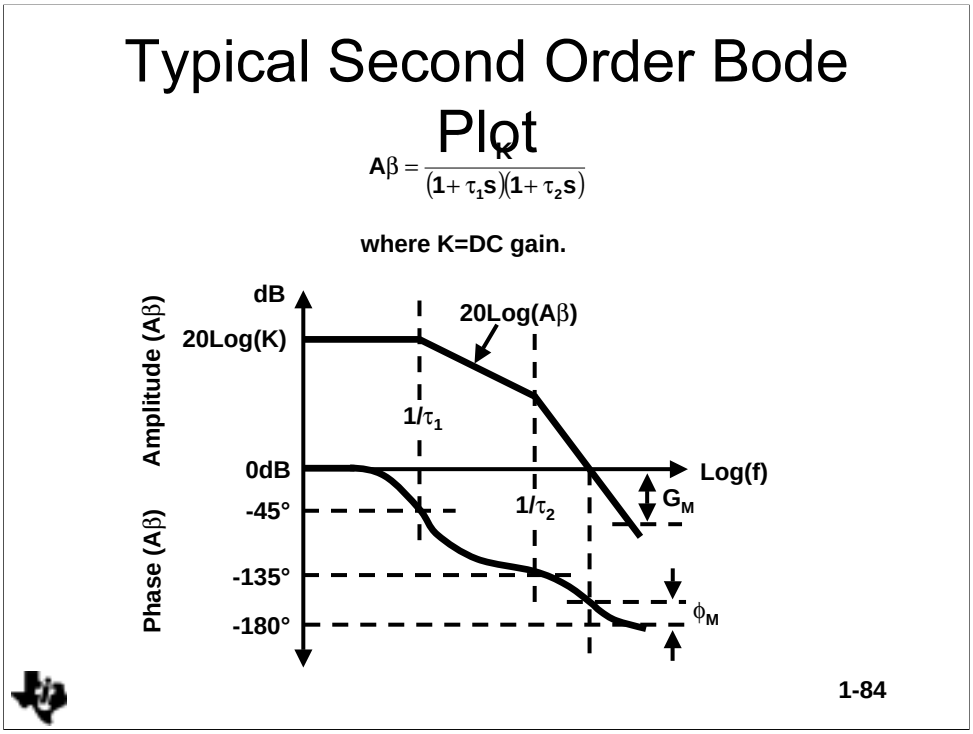

The loop gain transfer function is given below in a form common to many circuits, so it is analyzed in detail.

$$A\beta = \frac{K}{(1+\tau_1 s)(1+\tau_2 s)}$$

The quantity, K, is the dc gain, and it plots as a straight line with an intercept of 20Log(K). The two break points, $\omega = \omega_1$ and $\omega = \omega_2$, are plotted in the Bode plot. Each breakpoint contributes -20dB/decade slope to the plot, and 45° phase shift resulting from each breakpoint is plotted at the breakpoints.

This transfer function is referred to as a “two slope” because it two breakpoints resulting in a –40dB/decade slope. When a Bode plot crosses the 0dB (loop gain equals one) intercept the two slope indicates that phase shift has accumulated and consequently, the circuit has the ability to oscillate. Notice that a one slope can only accumulate 90° phase shift, so a one slope transfer function can’t oscillate. Furthermore, a two slope system can accumulate 180° phase shift, therefore a transfer function with a two or greater slope is capable of oscillation.

A one slope crossing the 0dB intercept is stable, whereas a two or greater slope crossing the 0dB intercept may be stable or unstable depending upon the accumulated phase shift. Two stability terms; the phase margin, ϕ_M, and the gain margin, G_M, are defined here. Of these two terms the phase margin is much more popular because phase shift is critical for stability. Phase margin is a measure of the difference in the actual phase shift and the theoretical 180° phase shift required for oscillation. Phase margin measurements or calculations are made at the 0dB crossover point. The gain margin is a measure of the difference from the theoretical 0dB required for oscillation, and the gain margin is measured or calculated at the 180° phase point. Phase margin is expressed mathematically below:

$$\phi_M = 180 - \tan gent^{-1}(A\beta)$$

The phase margin is very small, 20°, so it is hard to measure or predict from the Bode plot. A designer probably doesn't want a 20° phase margin because small phase margins cause the system to overshoot and rings, but this case points out the need to calculate small phase margins carefully. The circuit is stable, and it doesn't oscillate because the phase margin is positive. Also, the circuit that has the smallest phase margin has the highest frequency response and bandwidth.

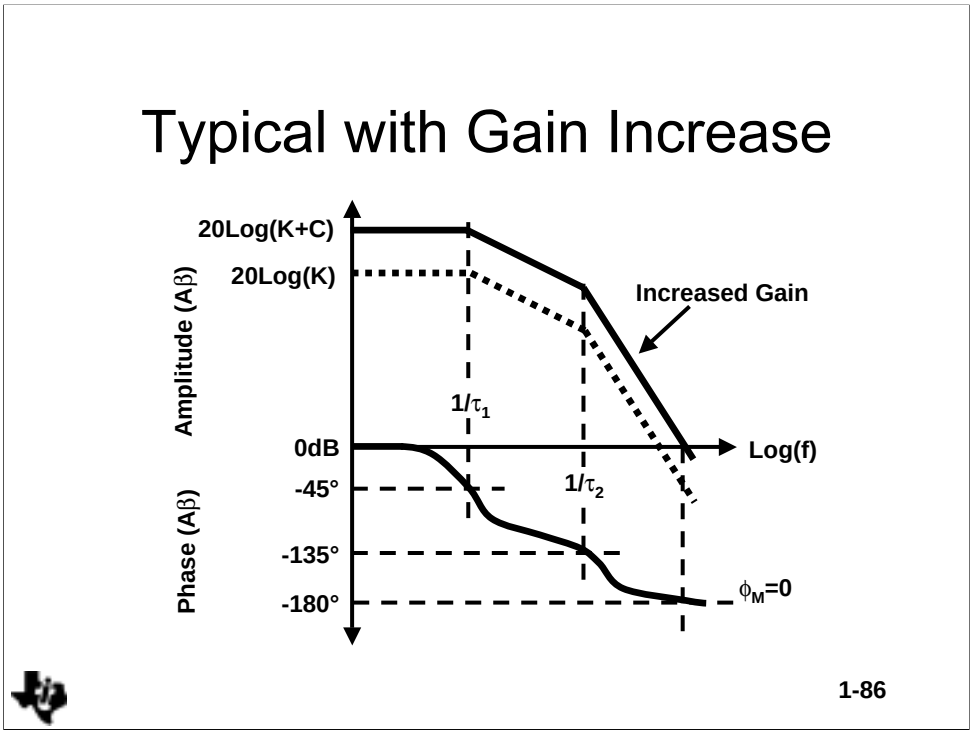

Increasing the loop gain to (K+C) shifts the loop gain magnitude plot up. The pole locations are constant, thus the 0dB crossover point moves to the right. This causes more phase shift to accumulate, and the phase margin is reduced to zero. The circuit becomes oscillatory with no phase margin, but the circuit is not good for much in this condition because production tolerances and worst case conditions insure that the circuit will oscillate when you want it to amplify, and vice versa. Remember that decreasing the closed loop gain results in an increased loop gain that decreases stability.

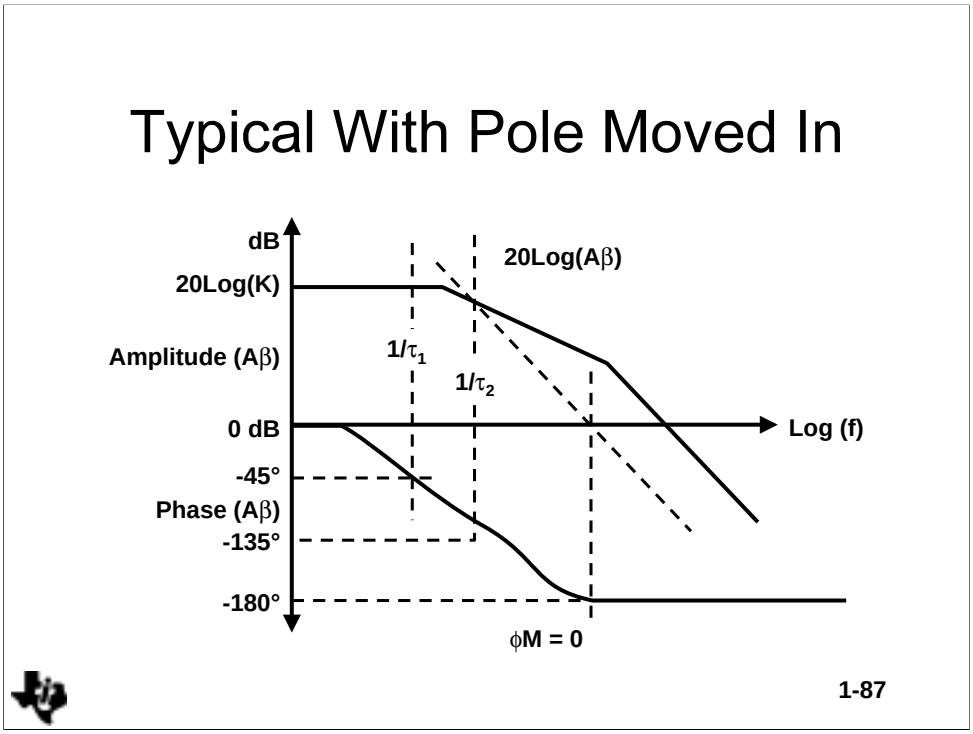

When the circuit poles are spaced closer the situation results in a faster accumulation of phase shift. The phase margin is zero because the loop gain phase shift reaches 180° before the magnitude passes through 0dB. This circuit oscillates, but it is not a very stable oscillator because the transition to 180° phase shift is very slow. Stable oscillators have a very sharp transition through 180°. Remember, adding a capacitor to the circuit as people often do when they are trying to eliminate an oscillation causes a pole to appear close in, and the added pole exacerbates the oscillation problem.

Stability

Peaking

Overshoot

Ringing



The General Feedback Equation

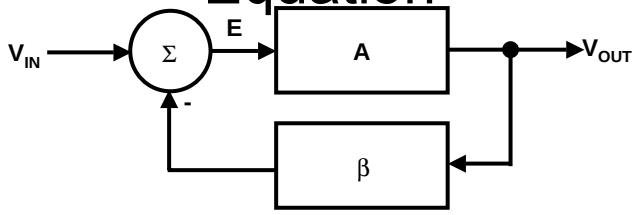

FEEDBACK SYSTEM BLOCK DIAGRAM

$V_{OUT} = AE$

$E = V_I - \beta V_O$

$V_{OUT} / A = V_{IN} - \beta V_{OUT}$

$A/(1+A\beta)V_{OUT} = V_{IN}$

$$\frac{V_{OUT}}{V_{IN}} = \frac{A}{1+A\beta}$$

$V_{OUT} / V_{IN} = 1/\beta$ for $A\beta >> 1$

1-89

The block "A" is called the direct gain, and the block "β" is called the feedback factor. All feedback systems can be represented by this basic diagram because complicated diagrams can be reduced to this simple diagram.

The output and error equations are written below.

$$\mathbf{V_{OUT}} = \mathbf{EA} \qquad \text{(7-89-1}$$

$$\mathbf{E} = \mathbf{V_{IN}} - \beta\mathbf{V_{OUT}} \qquad \text{(7-89-2}$$

Combining equations 7-89-1 and 7-89-2 yields equation 7-89-3.

$$\frac{\mathbf{V_{OUT}}}{\mathbf{A}} = \mathbf{V_{IN}} - \beta\mathbf{V_{OUT}} \qquad \text{(7-89-3}$$

Collecting terms yields equation 7-89-4.

$$\mathbf{V_{OUT}}\left(\frac{\mathbf{1}}{\mathbf{A}} + \beta\right) = \mathbf{V_{IN}} \qquad \text{(7-89-4}$$

Rearranging terms yields the classic form of the feedback equation.

$$\frac{\mathbf{V_{OUY}}}{\mathbf{V_{IN}}} = \frac{\mathbf{A}}{\mathbf{1}+\mathbf{A}\beta} \qquad \text{(7-89-5}$$

Please notice that equation 7-89-5 reduces to equation 7-89-6 when the term , Aβ, in equation 7-89-5 becomes very large with respect to one. Equation 7-89-6 is called the ideal feedback equation because it depends on the assumption that $A\beta >> 1$, and it finds extensive use when amplifiers are assumed to have ideal qualities. Under the conditions that $A\beta >> 1$, the system gain is determined by the feedback factor β. Stable passive circuit components are used to implement the feedback factor, thus the ideal closed loop gain is predictable and stable because β is stable and predictable.

$$\frac{\mathbf{V_{OUT}}}{\mathbf{V_{IN}}} = \frac{\mathbf{1}}{\beta} \qquad \text{(7-89-6}$$

Determining Stability

$$1 + A\beta = 0$$

$$A\beta = -1 = \left| \mathbf{1} \right| \angle -180$$

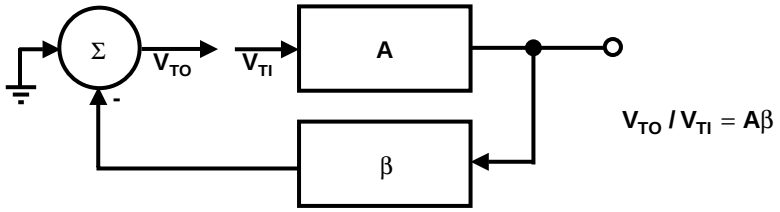

Block Diagram For Computing The Loop Gain



1-90

The quantity Aβ is so important that it has been given a special name, loop gain. Consider the figure; when the voltage inputs are grounded (current inputs are opened) and the loop is broken the calculated gain is the loop gain, Aβ. Now, keep in mind that this is a mathematics of complex numbers which have magnitude and direction. When the loop gain approaches minus one, or to express it mathematically $1\angle 180^{o}$, equation 7-1-5 approaches infinity because $1/0 \Rightarrow \infty$. The circuit output heads for infinity as fast as it can using the equation of a straight line. If the output were not energy limited the circuit would explode the world, but it is energy limited by the power supplies so the world stays intact.

Active devices in electronic circuits exhibit non-linear behavior when their output approaches a power supply rail, and the non-linearity reduces the amplifier gain until the loop gain no longer equals $1\angle 180^{o}$. Now the circuit can do two things: first it could become stable at the power supply limit, or second, it can reverse direction (because stored charge keeps the output voltage changing) and head for the negative power supply rail.

The first state where the circuit becomes stable at a power supply limit is named lockup; the circuit will remain in the locked up state until power is removed. The second state where the circuit bounces between power supply limits is named oscillatory. Remember, the loop gain, Aβ, is the sole factor that determines stability for a circuit or system. Inputs are grounded or disconnected when the loop gain is calculated, so they have no affect on stability.

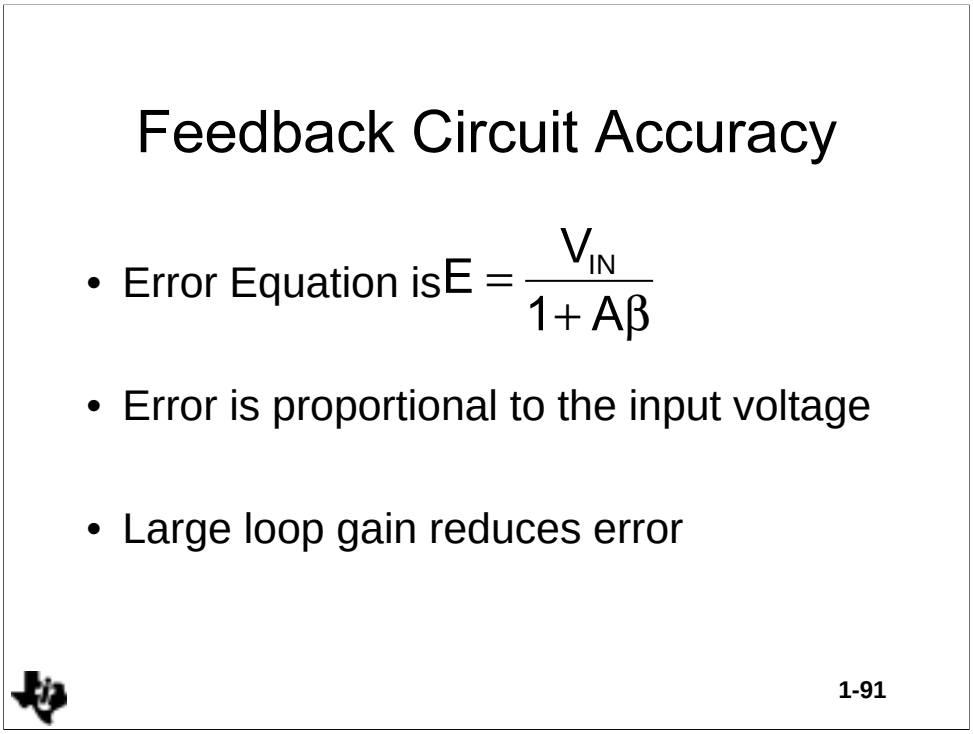

Equations 7-2-1 and 7-2-2 are combined and rearranged to yield equation 7-91-1 which gives an indication of the system or circuit error.

$$E = \frac{V_{IN}}{1 + A\beta} \quad \text{(7-91-1)}$$

First, notice that the error is proportional to the input signal. This is the expected result because a bigger input signal results in a bigger output signal, and bigger output signals require more drive voltage. Second, the loop gain is inversely proportional to the error. As the loop gain increases the error decreases, thus large loop gains are attractive for minimizing errors. Large loop gains also decrease stability, thus there is always a tradeoff between error and stability.

Non-Inverting Op Amp

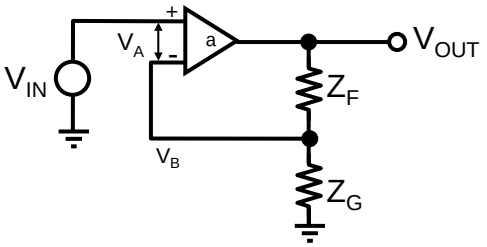

$$V_{OUT} = a(V_{IN} - V_B)$$

$$V_B = \frac{V_{OUT} Z_G}{Z_F + Z_G}$$

$$V_{OUT} = aV_{IN} - \frac{aZ_G V_{OUT}}{Z_G + Z_F}$$

$$\frac{V_{OUT}}{V_{IN}} = \frac{a}{1 + \frac{aZ_G}{Z_G + Z_F}}$$

Equation 7-92-1 is the amplifier transfer equation.

$$V_{OUT} = a(V_{IN} - V_B) \quad \text{(7-92-1}$$

Equation 7-92-2 is the output equation.

for $I_B = 0$ $\quad V_B = \frac{V_{OUT} Z_G}{Z_F + Z_G}$ (7-92-2

Combining equations 7-92-1 and 7-92-2 yields equation 7-92-3.

$$V_{OUT} = aV_{IN} - \frac{aZ_G V_{OUT}}{Z_G + Z_F} \quad \text{(7-92-3}$$

Rearranging terms in equation 7-92-3 yields equation 7-92-4 which describes the transfer function of the circuit.

$$\frac{V_{OUT}}{V_{IN}} = \frac{a}{1 + \frac{aZ_G}{Z_G + Z_F}} \quad \text{(7-92-4}$$

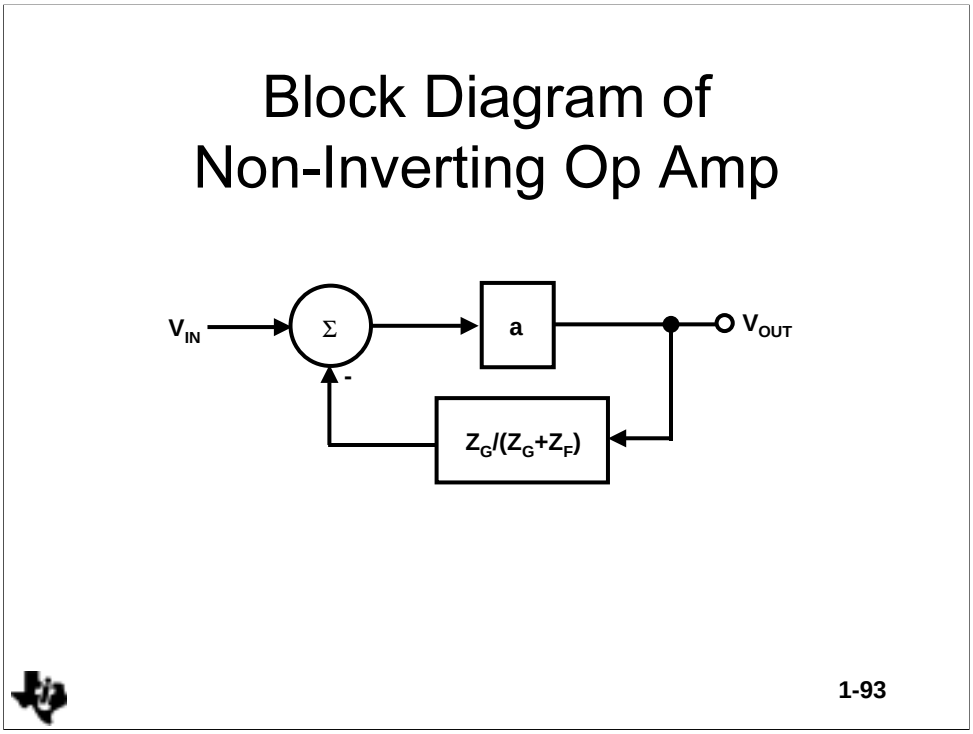

Equation 7-5-4 can be expressed as the block diagram. The block diagram makes it easy to relate the stability of the non-inverting op amp to the general stability equation already developed.

Non-Inverting Op Amp Loop Gain

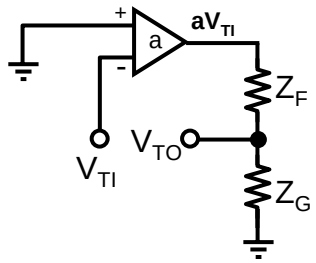

$$\frac{V_{TO}}{V_{TI}} = \frac{aZ_G}{Z_G + Z_F} = A\beta$$

1-94

The non-inverting loop gain is calculated by breaking the loop and applying a test signal, V_{TI}. First, voltage sources are grounded and current sources are open circuited. The return signal, V_{TO}, is calculate first and then the loop gain is calculated as shown in the figure. The loop gain determines stability. The op amp inputs have no effect on stability because they are grounded or open circuited for the loop gain calculation.

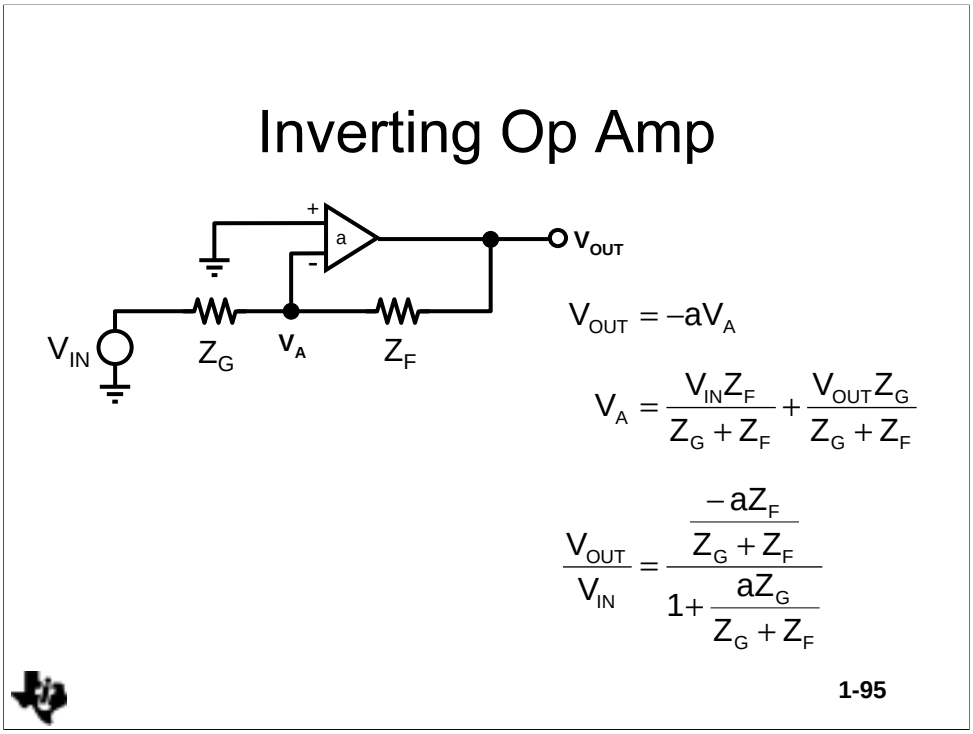

The transfer equation for the inverting op amp circuit is given in equation 7-95-1.

$$V_{OUT} = -aV_A \qquad \text{(7-95-1}$$

The node voltage is described in equation 7-95-2, and equation 7-95-3 is obtained by combining equations 7-95-1 and 7-95-2.

for $I_B = 0$ (7-95-2

$$V_A = \frac{V_{IN}Z_F}{Z_G + Z_F} + \frac{V_{OUT}Z_G}{Z_G + Z_F}$$

(7-95-3

$$\frac{V_{OUT}}{V_{IN}} = \frac{\frac{-aZ_F}{Z_G + Z_F}}{1 + \frac{aZ_G}{Z_G + Z_F}}$$

Equation 7-95-3 is the transfer function of the inverting op amp.

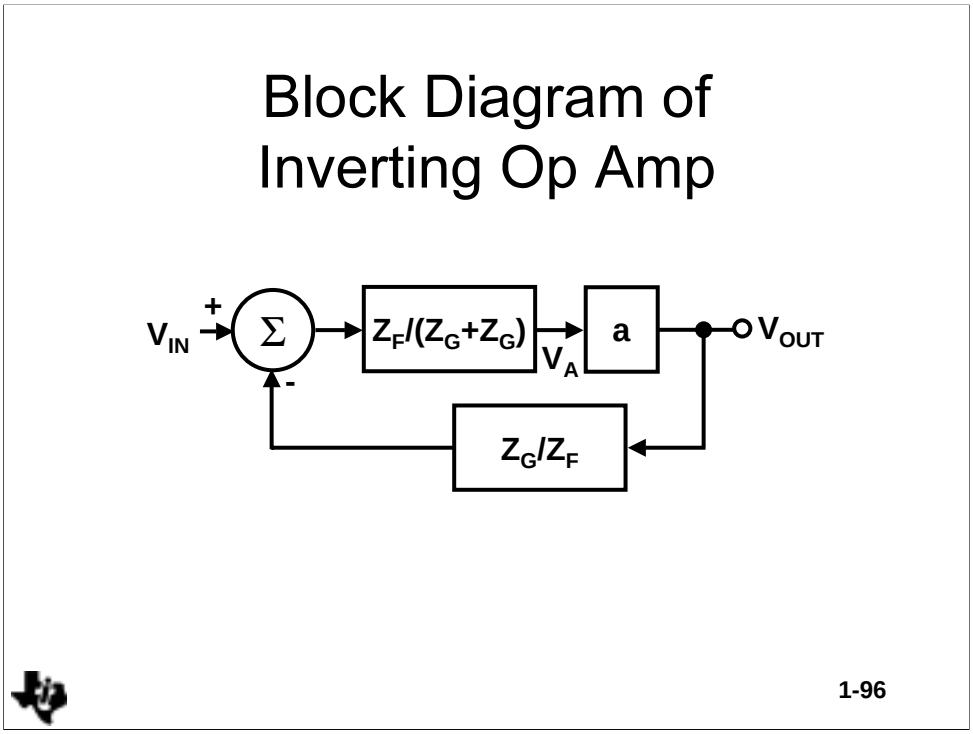

Equation 7-8-3 can be expressed as the block diagram. The block diagram makes it easy to relate the stability of the inverting op amp to the general stability equation already developed.

Inverting and Non-Inverting Comparisons

- Non-Inverting $$\frac{V_{OUT}}{V_{IN}} = \frac{a}{1+\frac{aZ_G}{Z_G+Z_F}}$$

- Inverting $$\frac{V_{OUT}}{V_{IN}} = \frac{\frac{-aZ_F}{Z_G+Z_F}}{1+\frac{aZ_G}{Z_G+Z_F}}$$



1-97

Stability Conclusions

- Loop Gain $\mathbf{A\beta} = \dfrac{\mathbf{aZ_G}}{\mathbf{Z_G + Z_F}}$
- $A_{INV} \neq A_{NON\text{-}INV}$
- Inputs have no affect on stability
- Error is inversely proportional to loop gain



1-98

There are several things that must be mentioned at this point in the analysis. First, the transfer functions for the non-inverting and inverting equations, 7-5-4 and 7-8-3, are different. For a common set of Z_G and Z_F values the magnitude and polarity of the gains are different. Second, the loop gain of both circuits, as shown in equations 7-5-4 and 7-8-3, is identical. Thus, the stability performance of both circuits is identical even though their transfer equations are different. This makes the important point that *stability is not dependent on the circuit inputs*. Third, the "A" gain block shown in figure 7-2-1 is different for each op amp circuit. By comparison of equations 7-5-4 and 7-8-3 we see that $A_{NON\text{-}INV} = a$ and $A_{INV} = aZ_F/(Z_G + Z_F)$. The error is inversely proportional to the loop gain; thus, the accuracy of identical closed loop gain inverting and non-inverting op amp circuits is different.

(7-98-1

$$\mathbf{A\beta} = \frac{\mathbf{aZ_G}}{\mathbf{Z_G + Z_F}}$$

Equation 7-98-1 is used to compensate all op amp circuits.

Second Order Equation

$$1 + A\beta(s) = 1 + \frac{K}{(1 + s\tau_1)(1 + s\tau_2)} = 0$$

where $\tau = RC$

$$s^2 + \frac{\tau_1 + \tau_2}{\tau_1\tau_2}s + \frac{1 + K}{\tau_1\tau_2} = 0$$

$$s^2 + 2\zeta\omega_N s + \omega_N^2 = 0$$

$$\omega = 2\pi f$$

$$\omega_N^2 = \frac{1 + K}{\tau_1\tau_2}$$

$$2\zeta\omega_N = \frac{\tau_1 + \tau_2}{\tau_1\tau_2}$$

1-99

Feedback systems are often modeled as two pole circuits. The second order equation is a common approximation used for analysis because it describes a two pole circuit. All real circuits are more complex than two poles, but except for a small fraction, they can be represented by a two pole equivalent. The second order equation is extensively described in the control literature.

Second Order — Magnitude and Phase

$$\frac{K}{\sqrt{\left(1+\omega_C{}^2\tau_1{}^2\right)}\sqrt{\left(1+\omega_C{}^2\tau_2{}^2\right)}} = 1$$

$$\omega_C{}^4 + 2\zeta\omega_N{}^2\omega_C{}^2 - \omega_N{}^4 = 0$$

$$\phi_M = \mathrm{TAN}^{-1}\left|\frac{\omega_C(\tau_1+\tau_2)}{1-\omega_C{}^2\tau_1\tau_2}\right|$$

$$\phi_M = \mathrm{TAN}^{-1}\left|2\zeta\omega_N / \omega_C\right|$$



1-100

The magnitude and phase of a second order equation is shown above.

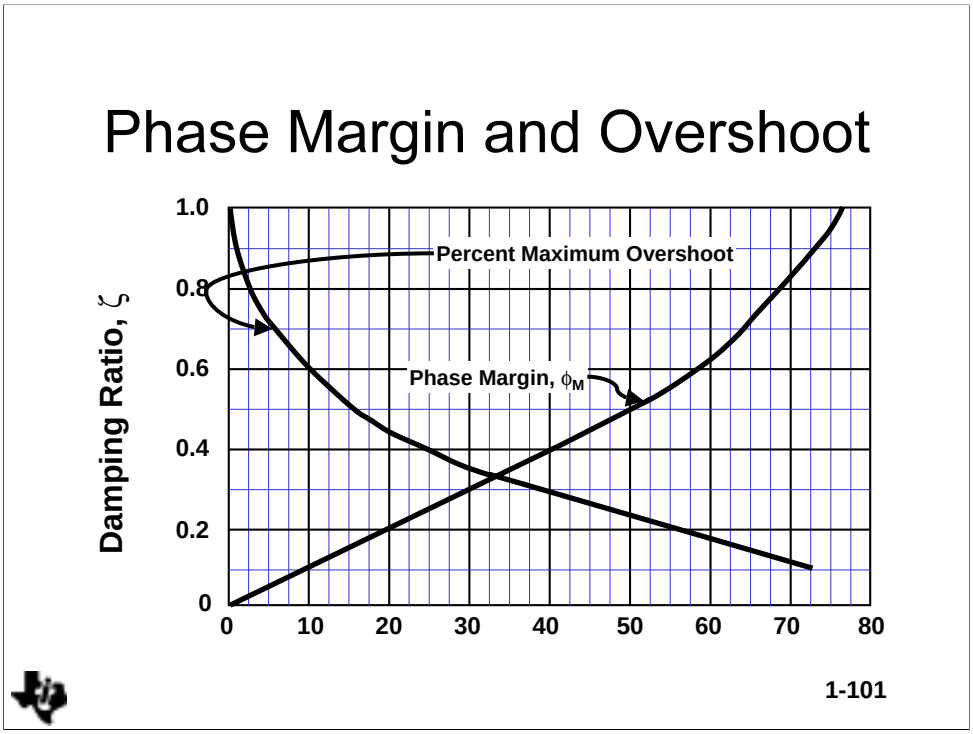

The phase margin, and overshoot are plotted versus the damping ratio. Enter the graph at the calculated damping ratio, say 0.4, and read the overshoot at 25% and the phase margin at 42°. If a designer had a circuit specification of 5% overshoot, then the damping ratio must be 0.78 with a phase margin of 62°.

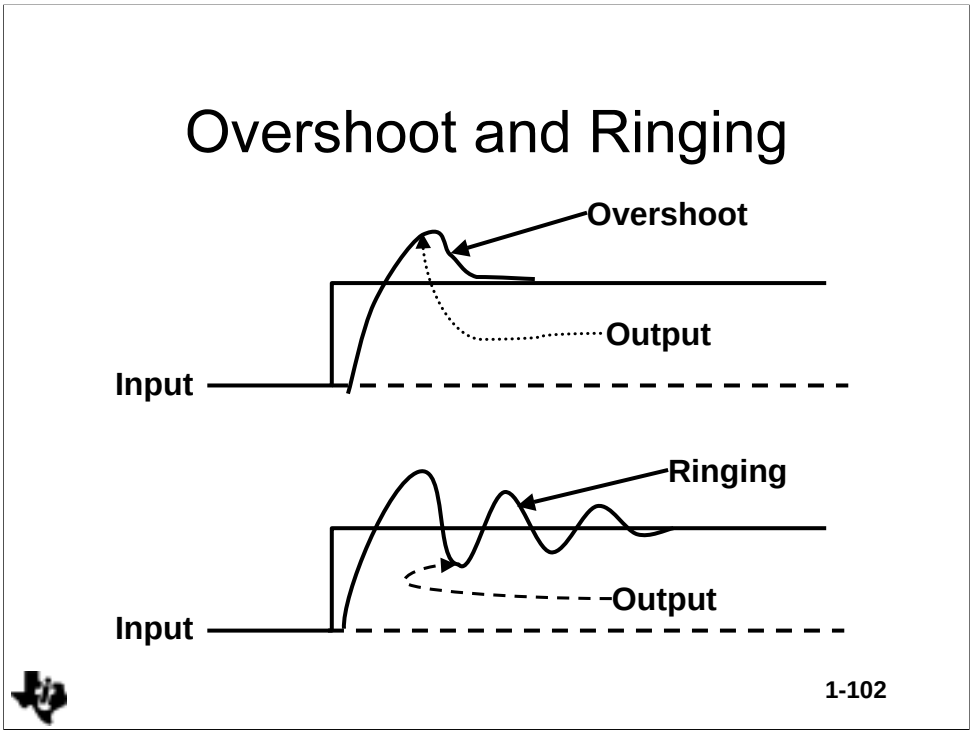

As the phase margin decreases zeta decreases and the circuit tends towards instability. First, the circuit exhibits overshoot where the response overshoots the expected output value. Second, the circuit exhibits ringing where the response oscillates (decaying oscillation) above and below the expected output value. Third, oscillation which is ringing with no decay, results.

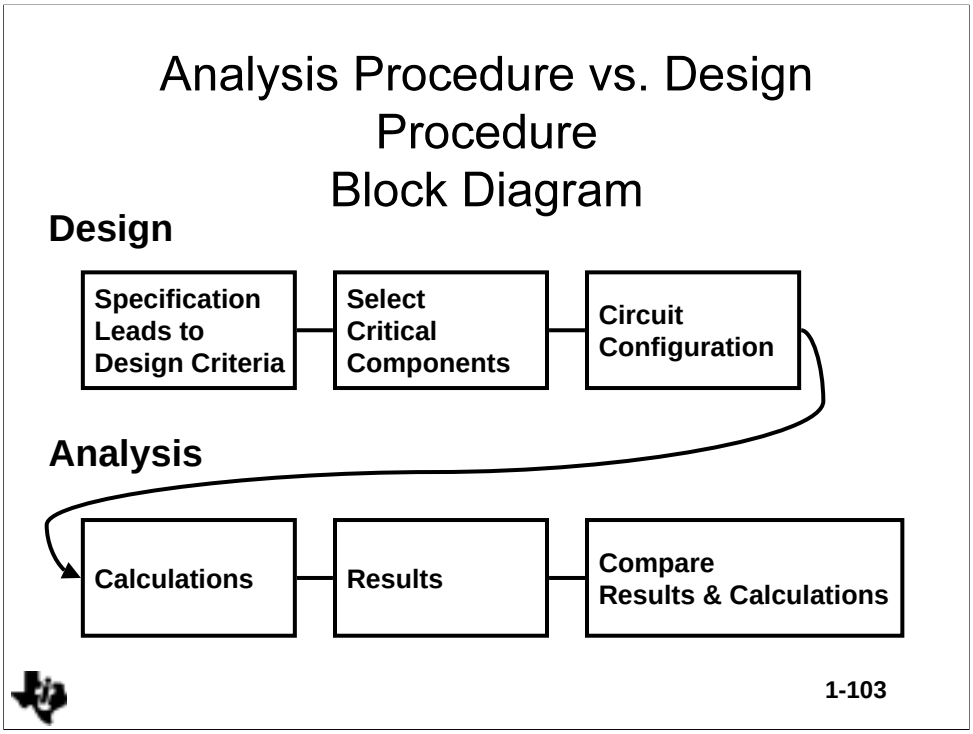

The design procedure starts with the specification. The designer creates an error budget based on the specifications. The most critical components (converters, DSP, etc.) are selected first, and their errors are subtracted from the error budget. The least critical components (op amps, interface, etc) are selected next, and their tolerance is selected to be within the error budget.

The circuit configuration has always been in mind when the components were selected, and now the circuit configuration is modified to accommodate the selected components. Analysis, which consists of calculations and results/specification verification, comes last.

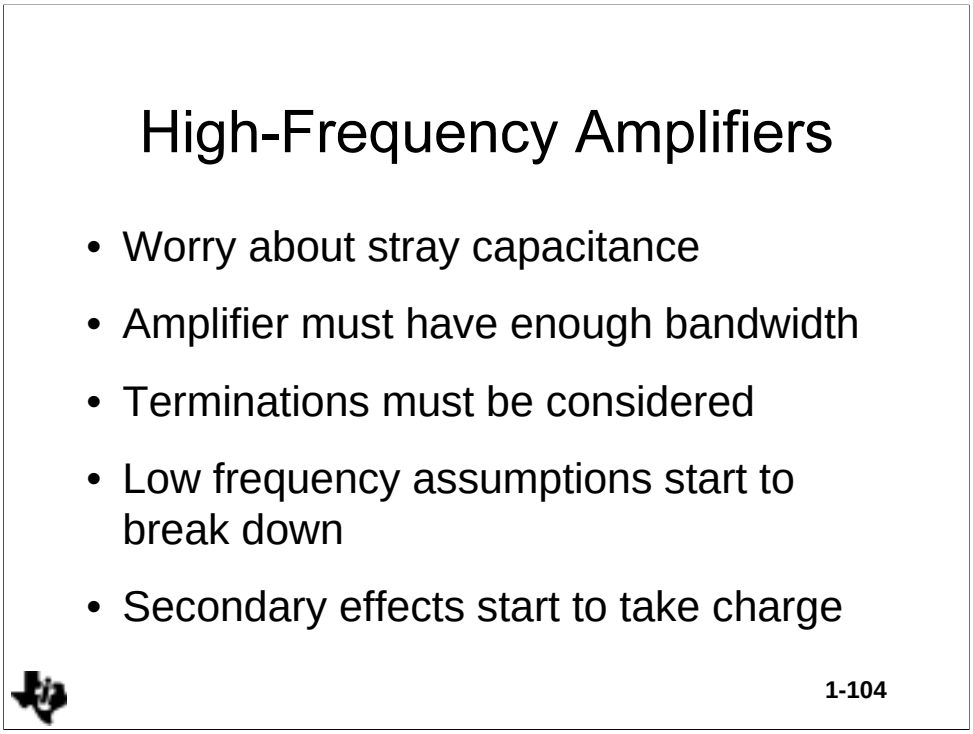

At high frequencies the assumption of high gain breaks down rapidly. This leads to excess phase shift and the possibility of instability. Stray components such as capacitance and inductance become critical components which must be neutralized or accounted for.

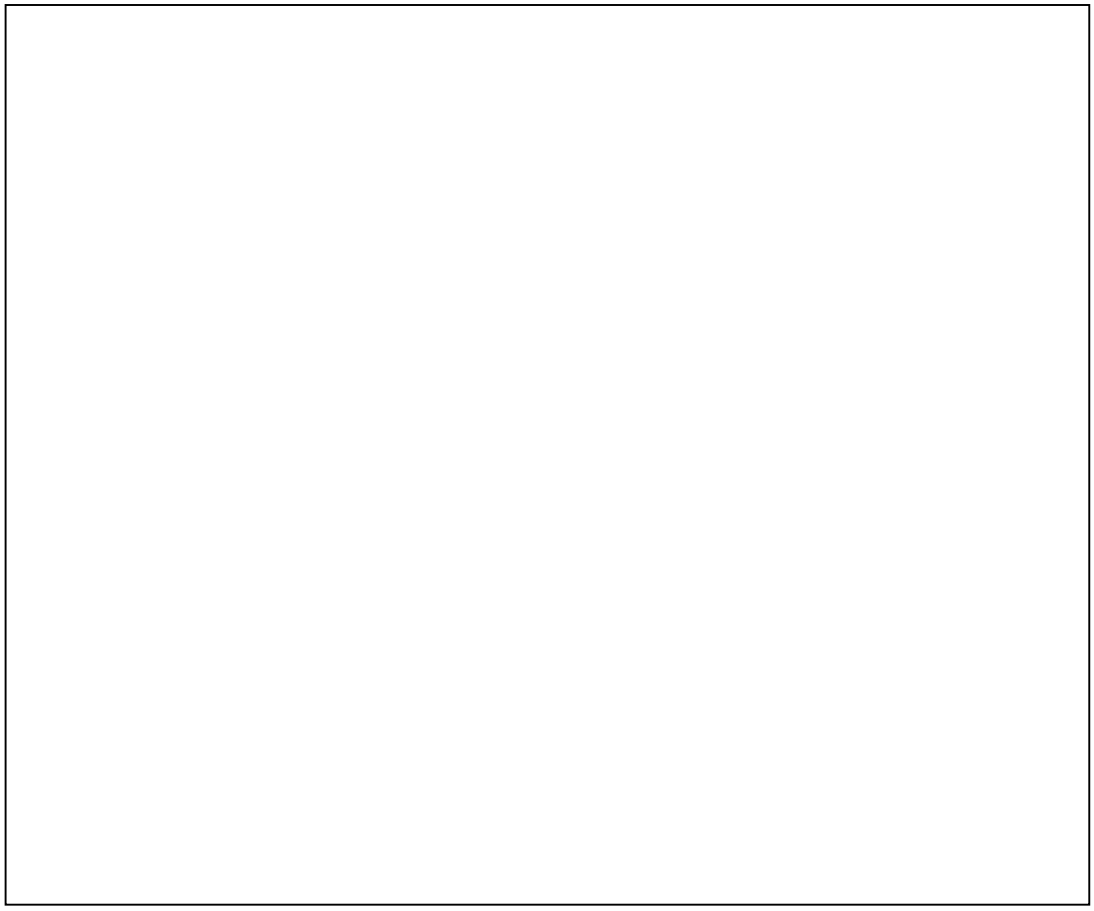

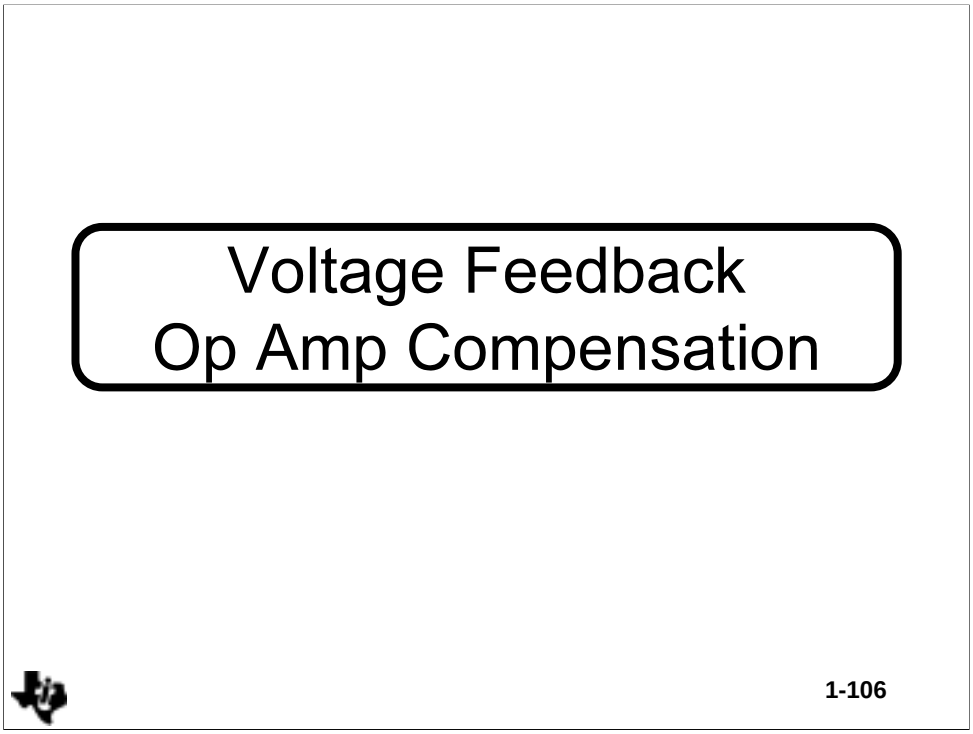

Voltage feedback amplifiers (VFA) have been with us for about 60 years, and they have been a problem for circuit designers since the first day. You see, the feedback that makes them versatile and accurate also has a tendency to make them unstable. The operational amplifier (op amp) circuit configuration uses a high gain amplifier whose parameters are determined by external feedback components. The amplifier gain is so high that the slightest input signal would saturate the amplifier output without these external feedback components. The op amp is in common usage, so this configuration is examined in detail, but the results are applicable to many other voltage feedback circuits. Current feedback amplifiers (CFA) are similar to VFAs, but the differences are important enough to warrant CFAs being handled in a separate application note.

Feedback circuits exhibit poor phase response, overshoot, and ringing long before oscillation occurs, and these effects are considered undesirable by circuit designers. Relative stability is defined in terms of performance. By definition, when designers decide what tradeoffs are acceptable they determine what the relative stability of the circuit is. A relative stability measurement is the damping ratio, ζ. The damping ratio is related to phase margin, hence phase margin is another measure of relative stability.

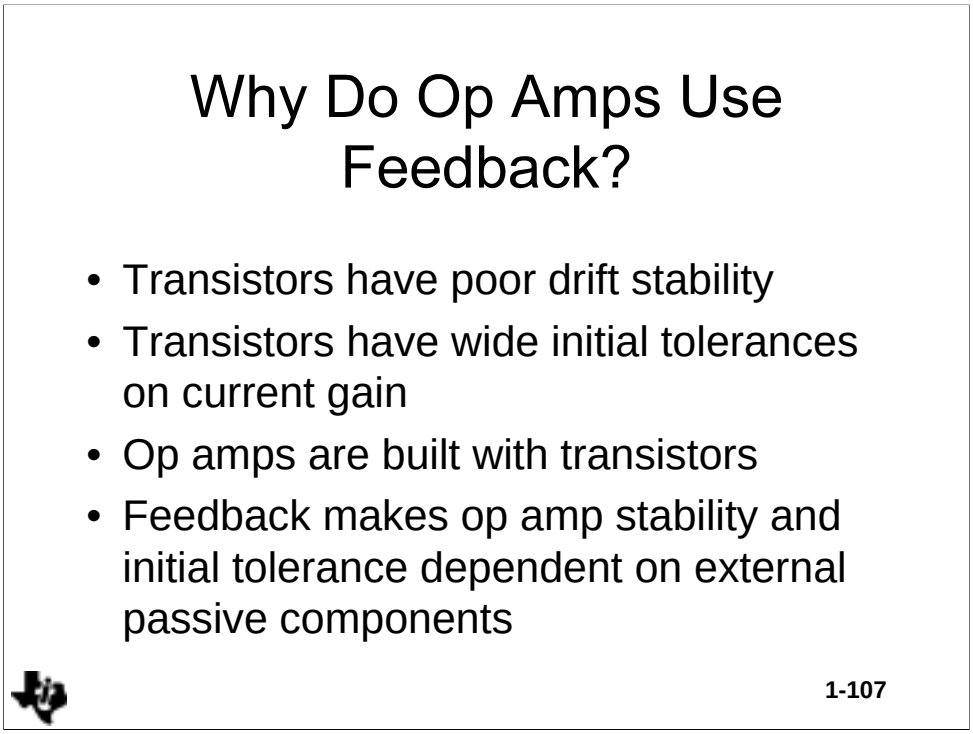

Amplifiers are built with active components such as transistors. Pertinent transistor parameters like transistor gain are subject to drift and initial inaccuracies from many sources, so amplifiers being built from these components are subject to drift and inaccuracies. The drift and inaccuracy is minimized or eliminated by using negative feedback. The op amp circuit configuration employs feedback to make the transfer equation of the circuit independent of the amplifier parameters (well almost), and while doing this, the circuit transfer function is made dependent on external passive components. The external passive components can be purchased to meet almost any drift or accuracy specification; only the cost and size of the passive components limit their use.

Once feedback is applied to the op amp it is possible for op amp circuit to become unstable. Certain amplifiers belong to a family called internally compensated op amps; they contain internal capacitors which are sometimes advertised as precluding instabilities. Although internally compensated op amps do not oscillate when operated under specified conditions, many have relative stability problems that manifest themselves as poor phase response, ringing and overshoot. The only absolutely stable internally compensated op amp is the one lying on the workbench without power applied! All other internally compensated op amps oscillate under some external circuit conditions.

Selecting a Compensation Scheme

- Some op amps have internal compensation
- Internally compensated op amps may be unstable under some circuit conditions
- Circuit parasitic components cause instability
- Compensation is selected to stabilize the circuit
- Compensation does not extend op amp bandwidth



1-108

Non-internally compensated or “externally” compensated op amps are unstable without the addition of external stabilizing components. This situation is a disadvantage in many cases because they require additional components, but the lack of internal compensation enables the top drawer circuit designer to squeeze the last drop of performance from the op amp. You have two options: op amps internally compensated by the IC manufacturer, or externally compensated by you. Compensation, except that done by the op amp manufacturer, must be done external to the IC. Surprisingly enough, internally compensated op amps require external compensation for demanding applications.

Compensation is achieved by adding external components that modify the circuit transfer function so that it becomes unconditionally stable. There are several different methods of compensating an op amp, and as you might suspect, there are pros and cons associated with each method of compensation. Teaching you how to compensate and how to evaluate the results of compensation is the intent of this seminar. After the op amp circuit is compensated, it must be analyzed to determine the effects of compensation. The modifications that compensation have on the closed loop transfer function often determine which compensation scheme is most profitably employed.

First we determine what compensation method to use. Second, we derive the compensation equations. Third, we analyze the closed loop transfer function to determine how it is modified by the compensation. The effect of the compensation on the closed loop transfer function often determines which compensation technique will be used.

Internal Compensation — Miller Effect

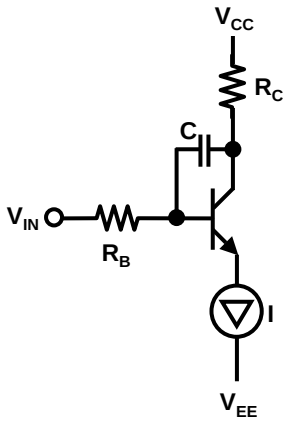

1-109

Op amps are internally compensated to save external components and to enable their use by less knowledgeable people. It takes some measure of analog knowledge to compensate an analog circuit. Internally compensated op amps normally are stable when they are used in accordance with the applications instructions. Internally compensated op amps are not unconditionally stable. They are multiple pole systems, but they are internally compensated such that they appear as a single pole system over much of the frequency range. There is no such thing as free lunch because internal compensation severely decreases the closed loop bandwidth of the op amp.

Internal compensation is accomplished in several ways, but the most common method is to connect a capacitor across the collector-base junction of a common-emitter voltage amplifier. The Miller effect multiplies the capacitor value by an amount approximately equal to the stage gain, thus the Miller effect uses small value capacitors for compensation.

Internal Compensation — TLV277x Frequency Response

Large-signal Differential Voltage Amplification
And Phase Margin Vs Frequency

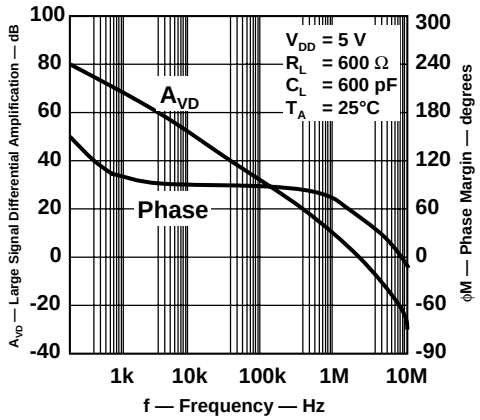

1-110

Internally compensated op amps can't be modeled as unconditionally stable single pole circuits because they all have multiple poles. The TLV277X series of op amps are shown in this and the next 3 slides. At V_{CC} = 5V, the phase margin at the 0dB crossover point is 60º, while it is 30º at V_{CC} = 2.7V. This translates to an expected overshoot of 18% at V_{CC} = 5V and 28% at V_{CC} = 2.7V. Unfortunately the time response plots are done with 100pF loading capacitance, hence we can't check our figures very well. The V_{CC} = 2.7V overshoot is approximately 2%, and it is almost impossible to figure out what the overshoot would have been with a 600pF loading capacitor. The small signal pulse response is done with mV signals, and that is a more realistic measurement than using the full signal swing.

Internal Compensation — TLV277x Frequency Response (cont'd)

Large-signal Differential Voltage Amplification
And Phase Margin Vs Frequency

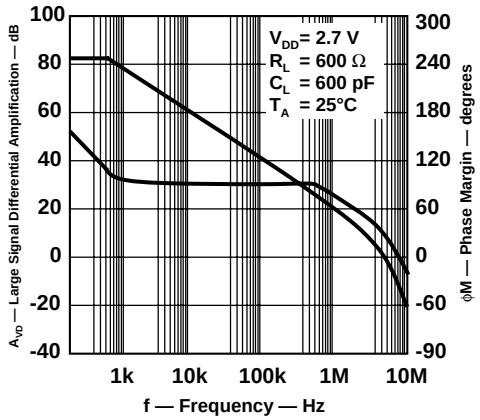

Internal Compensation — TLV277x Time Response

Voltage-Follower Small-Signal Pulse Response

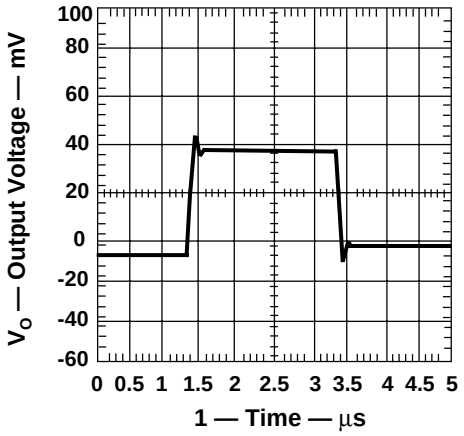

V_{DD} = 2.7 V
R_L = 600Ω
C_L = 100 pF
AV = 1
T_A = 25°C

1-112

Internally compensated op amps are very desirable because they are easy to use, and they don't require external compensation components. Their drawback is that the bandwidth is limited by the internal compensation scheme. The error in an op amp circuit is determined by the op amp open loop gain. In a non-inverting buffer configuration, the TL277X is limited to 1% error at 50kHz (V_{CC} = 2.7V) because the op amp gain is 40dB at that point. Circuit designers can play cute tricks such as bypassing the op amp with a capacitor to emphasize the high frequency gain, but the error is still 1%. If the TLV277X were not internally compensated, it could be externally compensated for a lower error at 50kHz because the gain would be much higher.

Internal Compensation — TLV277x Time Response (cont'd)

Inverting Small-Signal Pulse Response

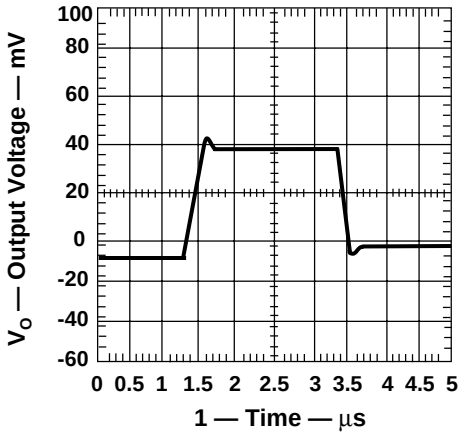

V_{DD} = 2.7 V
R_L = 600Ω
C_L = 100 pF
AV = -1
T_A = 25°C

1-113

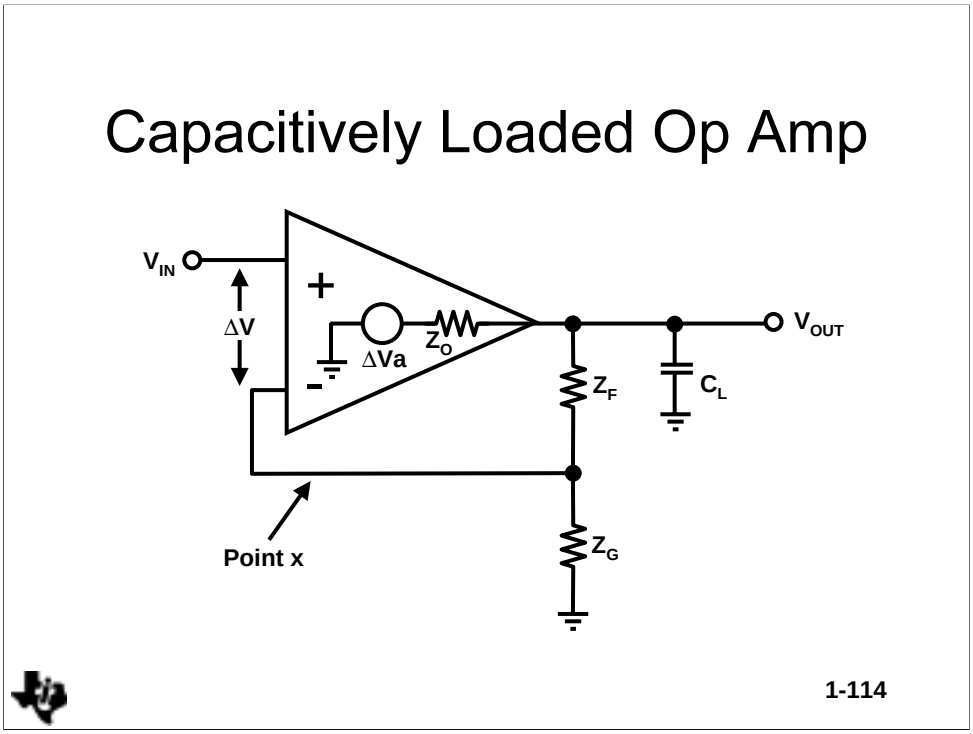

Capacitive loading causes potential instabilities, thus an op amp loaded with an output capacitor is a circuit configuration that must be analyzed. This circuit is called dominant pole compensation because if the pole formed by the op amp output impedance and the loading capacitor is located close to the zero frequency axis it becomes dominant.

Capacitively Loaded Op Amp With Loop Broken for Loop Gain (Aβ) Calculation

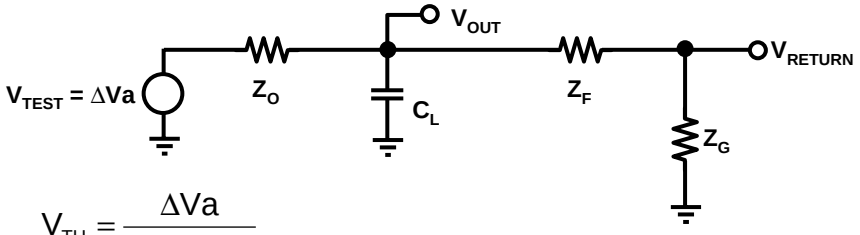

$$V_{TH} = \frac{\Delta Va}{Z_O C_L s + 1}$$

$$Z_{TH} = \frac{Z_O}{Z_O C_L s + 1}$$

$$\frac{V_{RETURN}}{V_{TEST}} = A\beta = \frac{\frac{aZ_G}{Z_F + Z_G + Z_O}}{\frac{(Z_F + Z_O) Z_O C_L s}{Z_F + Z_G + Z_O} + 1}$$

1-115

The analysis starts by looking into the capacitor and taking the Thevenin equivalent circuit.

$$V_{TH} = \frac{\Delta Va}{Z_O C_L s + 1} \quad \text{(8-115-1} \qquad Z_{TH} = \frac{Z_O}{Z_O C_L s + 1} \quad \text{(8-115-2}$$

Then the loop gain equation is written.

$$\frac{V_{RETURN}}{V_{TEST}} = A\beta = \frac{\frac{aZ_G}{Z_F + Z_G + Z_O}}{\frac{(Z_F + Z_G) Z_O C_L s}{Z_F + Z_G + Z_O} + 1} \quad \text{(8-115-3}$$

When the assumption is made that $(Z_F + Z_G) >> Z_O$ equation 8-115-3 reduces to equation 8-115-4.

$$A\beta = \frac{aZ_G}{Z_F + Z_G}\left(\frac{1}{Z_O C_L s + 1}\right) \quad \text{(8-115-4}$$

Equation 8-10-5 models the op amp as a second order system, hence substituting the second order model for a in equation 8-10-4 yields equation 8-10-6 which is the stability equation for the dominant pole compensation circuit.

$$a = \frac{K}{(s + \tau_1)(s + \tau_2)} \text{ (8-115-5} \qquad A\beta = \frac{K}{(s + \tau_1)(s + \tau_2)} \frac{Z_G}{Z_F + Z_G} \frac{1}{Z_O C_L s + 1} \text{ (8-115-6}$$

Several conclusions can be drawn from equation 8-10-6 depending on the location of the poles. When the pole introduced by Z_O and C_L moves towards the zero frequency axis it comes close to the τ_2 pole, and it adds phase shift to the system. Increased phase shift increases peaking and decreases stability. In the real world many loads, especially cables, are capacitive, and an op amp like the one pictured in figure 8-9 may ring while driving a capacitive load. The load capacitance causes peaking and instability in internally compensated op amps when the op amps do not have enough phase margin to allow for the phase shift introduced by the load.

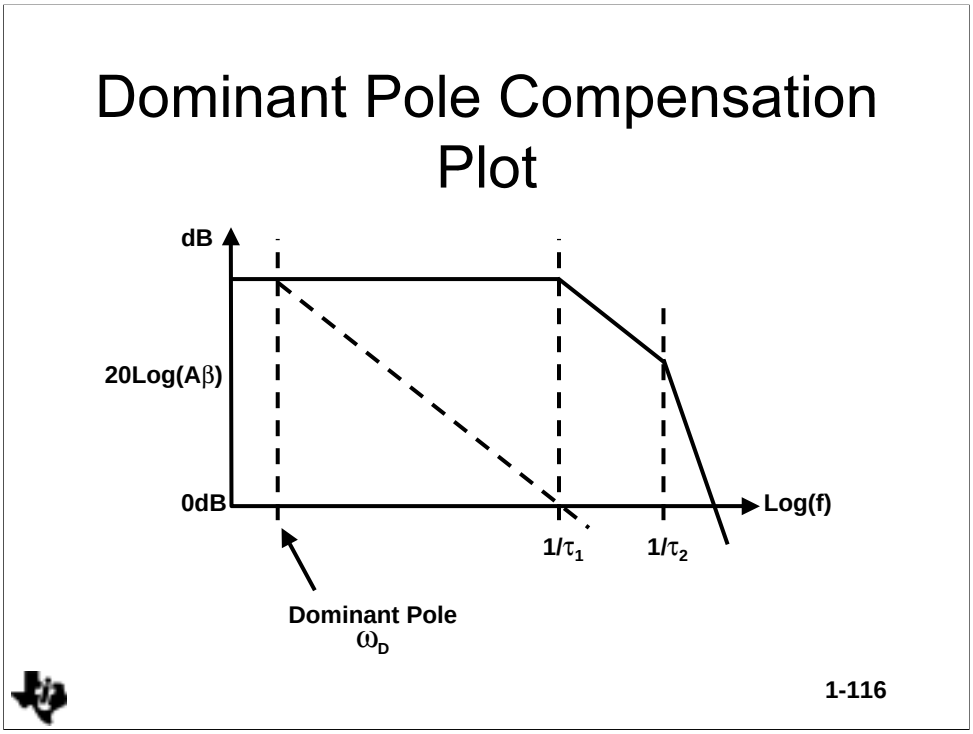

Prior to compensation, the Bode plot of an uncompensated op amp looks like that shown in figure 8-11. Notice that the break points are located close together thus accumulating about 180° of phase shift before the 0dB crossover point; the op amp is not usable and probably unstable. Dominant pole compensation is often used to stabilize these op amps. If a dominant pole, in this case ω_D, is properly placed it rolls off the gain so that τ_1 introduces 45° phase at the 0dB crossover point. After the dominant pole is introduced the op amp is stable with 45° phase margin, but the op amp gain is drastically reduced for frequencies above ω_D. This procedure works well for internally compensated op amps, but is seldom used for externally compensated op amps because inexpensive discrete capacitors are readily available.

Dominant Pole Compensation

—

Closed Loop Performance

$$\frac{V_{IN}}{V_{OUT}} = \frac{a}{1+\frac{aZ_G}{Z_G+Z_F}}$$

$$\left.\frac{V_{OUT}}{V_{IN}}\right|_{a\Rightarrow\infty} = \frac{Z_F+Z_G}{Z_G}$$

- As long as Z_O is small, the loading capacitance has little affect
- When Z_O becomes large, the bandwidth is reduced, if the circuit stays stable



1-117

(8-117-1 $$\frac{V_{OUT}}{V_{IN}} = \frac{a}{1+\frac{aZ_G}{Z_G+Z_F}}$$

When $a \Rightarrow \infty$ equation 8-117-1 reduces to equation 8-117-2.

(8-117-2 $$\frac{V_{OUT}}{V_{IN}} = \frac{Z_F+Z_G}{Z_G}$$

As long as the op amp has enough compliance and current to drive the capacitive load, and Z_O is small, the circuit functions as though the capacitor wasn't there. When the capacitor becomes large enough its pole interacts with the op amp pole causing instability. When the capacitor is huge it completely kills the op amp's bandwidth thus lowering the noise while retaining the high low frequency gain.

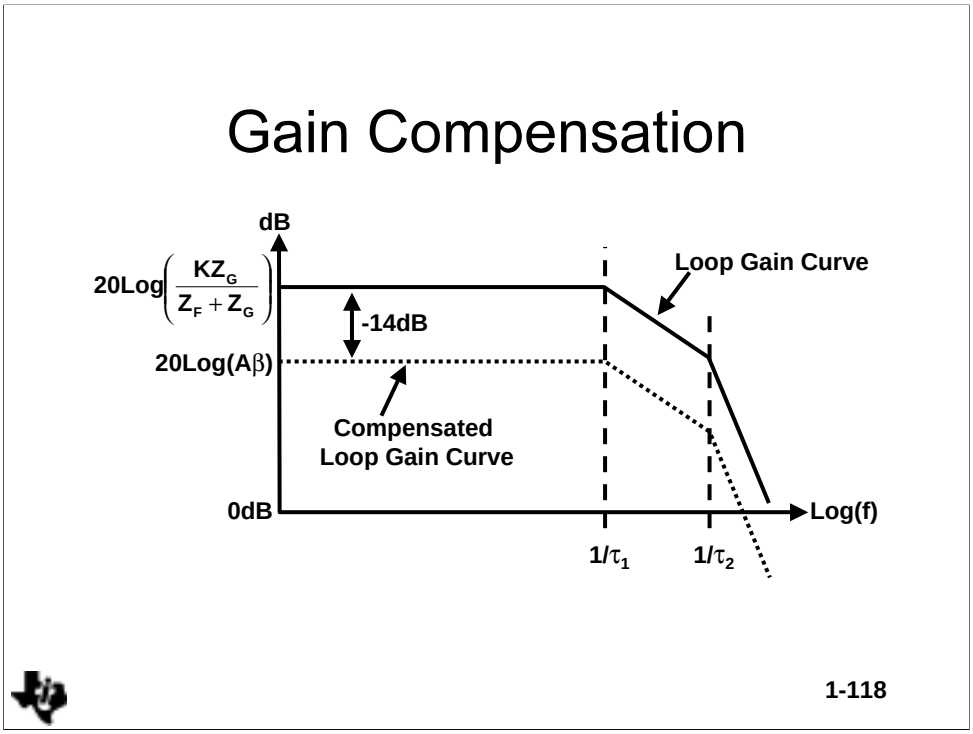

The original loop gain curve for a closed loop gain of one is shown in figure 8-118, and it is or comes very close to being unstable. If the closed loop non-inverting gain is changed to 9, then K changes from K/2 to K/10. The loop gain intercept on the Bode plot moves down 14dB, and the circuit is stabilized.

Gain compensation works for inverting or non-inverting op amp circuits because the loop gain equation contains the closed loop gain parameters in both cases. When the closed loop gain is increased, the accuracy and the bandwidth decrease. As long as the application can stand the higher gain, gain compensation is the best type of compensation to use. Uncompensated versions of internally compensated op amps are offered for sale as internally compensated op amps with minimum gain restrictions. As long as the circuit gain exceeds the specified gain this is economical and a safe mode of operation.

Lead Compensation Circuit

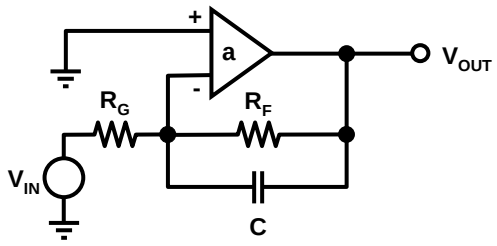

$$A\beta = \left(\frac{R_G}{R_F + R_G}\right)\left(\frac{R_F C_S + 1}{R_G \| R_F C_S + 1}\right) a$$

1-119

Sometimes lead compensation is forced on the circuit designer because of the parasitic capacitance associated with packaging and wiring op amps. Figure 8-119 shows the circuit for lead compensation; notice the capacitor in parallel with R_F. That capacitor is often made by parasitic wiring and the ground plane, and high frequency circuit designers go to great lengths to minimize or eliminate it. One man's pig is another man's pearl, because adding the parallel capacitor is a good way to stabilize the op amp and reduce noise. Lets analyze the stability first, and then we will analyze the closed loop performance.

The loop equation for the lead compensation circuit is given in equation 8-119-1.

$$A\beta = \left(\frac{R_G}{R_G + R_F}\right)\left(\frac{R_F Cs + 1}{R_G \| R_F Cs + 1}\right)\left(\frac{K}{(s + \tau_1)(s + \tau_2)}\right) \quad (8\text{-}119\text{-}1)$$

The compensation capacitor introduces a pole and zero into the loop equation. The zero always occurs before the pole because $R_F > R_F || R_G$. When the zero is properly placed it cancels out the τ_2 pole along with its associated phase shift.

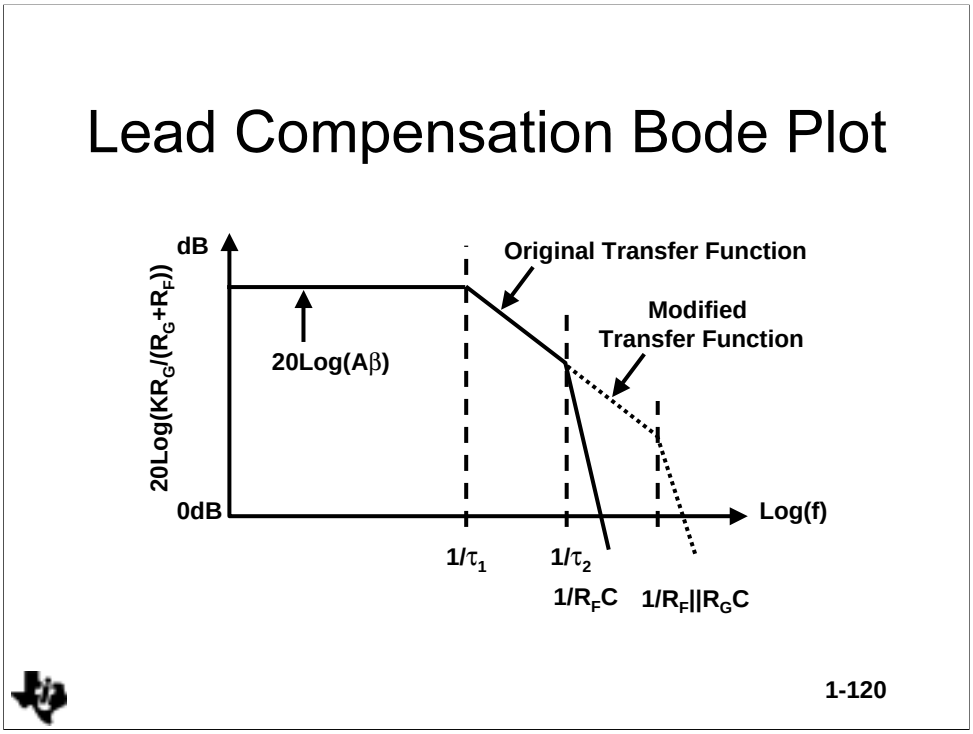

The original transfer function is shown in figure 8-120 drawn in solid lines. When the R_FC zero is placed at $\omega = 1/\tau_2$, it cancels out the τ_2 pole causing the bode plot to continue on a slope of -20dB/decade. When the frequency gets to $\omega = 1/(R_F||RG)C$, this pole changes the slope to -40dB/decade. Properly placed, the capacitor aids stability.

Inverting Op Amp With Lead Compensation

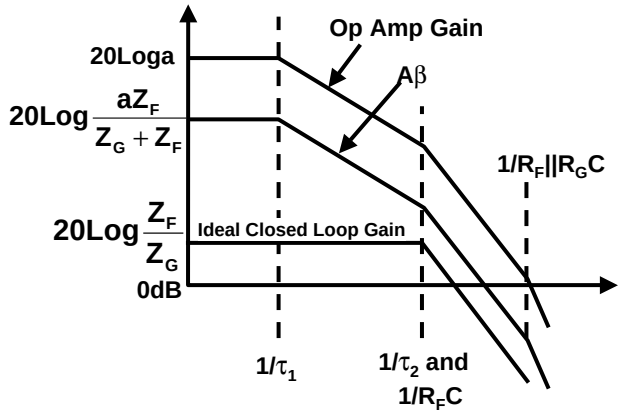

1-121

What does it do to the closed loop transfer function? The equation for the inverting op amp closed loop gain is repeated below.

$$\frac{V_{OUT}}{V_{IN}} = \frac{\frac{-aZ_F}{Z_G+Z_F}}{1+\frac{aZ_G}{Z_G+Z_F}} \qquad \text{(8-121-1}$$

When a approaches infinity equation 8-121-1 reduces to equation 8-121-2.

$$\frac{V_{OUT}}{V_{IN}} = -\frac{Z_F}{Z_{IN}} \qquad \text{(8-121-2}$$

Substituting R_F for Z_F and R_G for Z_G in equation 8-121-2 yields equation 8-121-3 which is the ideal closed loop gain equation for the lead compensation circuit.

$$\frac{V_{OUT}}{V_{IN}} = -\frac{R_F}{R_G}\left(\frac{1}{R_FCs+1}\right) \qquad \text{(8-121-3}$$

The forward gain for the inverting amplifier is given in equation 8-121-4.

$$A = \frac{aZ_F}{Z_G+Z_F} \approx \left(\frac{R_F}{R_G+R_F}\right)\left(\frac{1}{R_F\|R_GCs+1}\right) \qquad \text{(8-121-4}$$

The forward gain for the inverting op amp is not the op amp gain. Notice that the forward gain is reduced by the factor $R_F/(R_G+R_F)$, and it contains a high frequency pole. The ideal closed loop gain follows the ideal curve until the $1/R_FC$ breakpoint (same location as $1/\tau_2$ breakpoint), and then it slopes down at -20dB/decade. Lead compensation sacrifices the bandwidth between the $1/R_FC$ breakpoint and the forward gain curve. The location of the $1/R_FC$ pole determines the bandwidth sacrifice, and it can be much greater than shown here. The pole caused by R_F, R_G, and C does not appear until the op amp's gain has crossed the 0dB axis, thus it doesn't affect the ideal closed loop transfer function.

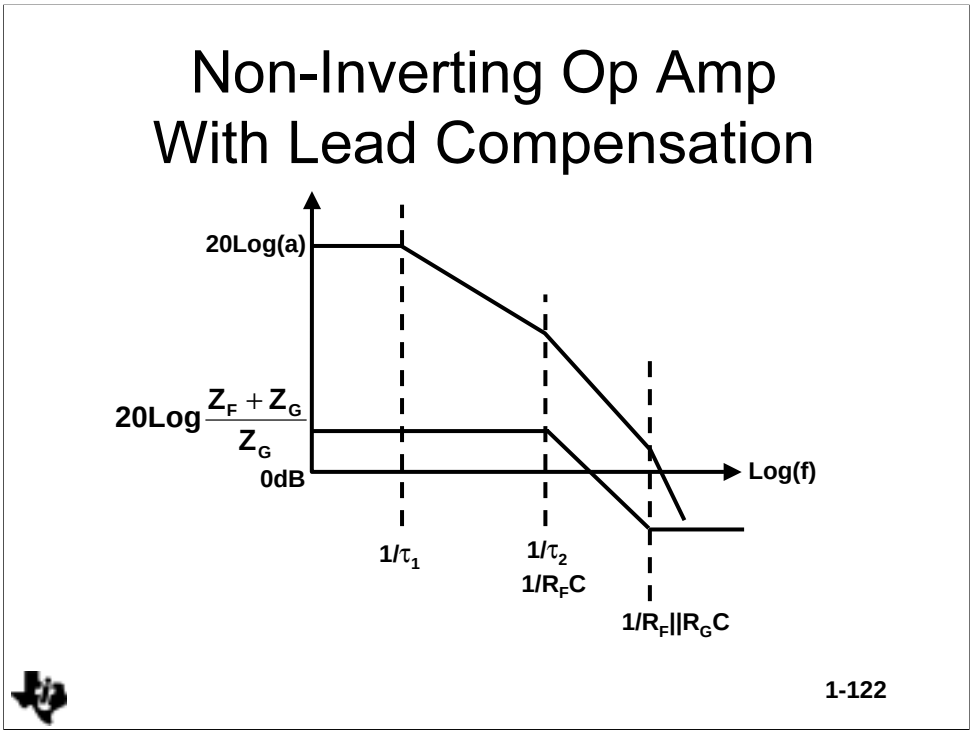

The forward gain for the non-inverting op amp is a.

$$\frac{V_{OUT}}{V_{IN}} = \frac{Z_F + Z_G}{Z_G}\left(\frac{R_F + R_G}{R_G}\right)\left(\frac{R_F \| R_G Cs + 1}{R_F Cs + 1}\right) \quad (8\text{-}122\text{-}1)$$

The plot of the non-inverting op amp with lead compensation is shown in figure 8-122. There is only one plot for both the op amp gain, a, and the forward gain, A, because they are identical in the non-inverting circuit configuration. The ideal starts out as a flat line. But, it slopes down because its closed loop gain contains a pole and a zero. The pole always occurs closer to the low frequency axis because $R_F > R_F||R_G$. The zero flattens the ideal closed loop gain curve, but it never does any good because it can't fall on the pole. The pole causes a loss in the closed loop bandwidth by the amount separating the closed loop and forward gain curves.

Although the forward gain is different in the inverting and non-inverting circuits, the closed loop transfer functions take very similar shapes. This becomes truer as the closed loop gain increases because the non-inverting forward gain approaches the op amp gain. This relationship can't be relied on in every situation, and each circuit must be checked to determine the closed loop effects of the compensation scheme.

Op Amp With Stray Capacitance on the Inverting Input

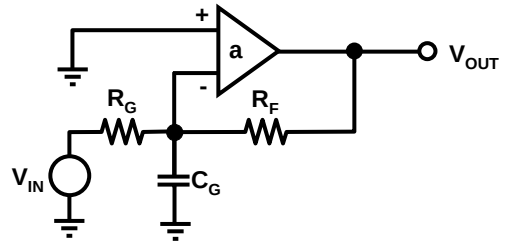

$$A\beta = \left(\frac{R_G}{R_G + R_F}\right)\left(\frac{1}{R_G \| R_F C_G s + 1}\right)\left(\frac{K}{(\tau_1 s + 1)(\tau_2 s + 1)}\right)$$

1-123

Stray capacitance on op amp inputs is a problem that circuit designers are always trying to get away from because it decreases closed loop frequency response or causes peaking. The circuit shown in figure 8-123 has some stray capacitance, C_G, connected from the inverting input to ground. Equation 8-123-1 is the loop gain equation for the circuit with input capacitance.

$$A\beta = \left(\frac{R_G}{R_G + R_F}\right)\left(\frac{1}{R_G \| R_F C_G s + 1}\right)\left(\frac{K}{(\tau_1 s + 1)(\tau_2 s + 1)}\right) \quad (8\text{-}123\text{-}1)$$

Op amps having high input and feedback resistors are subject to instability caused by stray capacitance on the inverting input. When the $1/(R_F||R_G C_G)$ pole moves close to τ_2 the stage is set for instability. Reasonable component values for a CMOS op amp are R_F = 1MΩ, R_G = 1MΩ, and C_G = 10pF. The resulting pole occurs at 318kHz, and this frequency is lower than the breakpoint of τ_2 for many op amps. There is 90° phase shift resulting from τ_1, the $1/ (R_F||R_G C)$ pole adds 45° phase shift at 318kHz, and τ_2 starts adds another 45° phase shift at about 600kHz. This circuit is unstable because of the stray input capacitance.

Compensated Attenuator Circuit

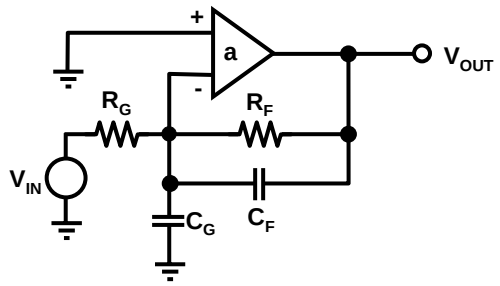

$$A\beta = \left(\frac{\frac{R_G}{R_G C_G s + 1}}{\frac{R_G}{R_G C_G s + 1} + \frac{R_F}{R_F C_F s + 1}} \right) a$$



1-124

The circuit is compensated by adding a feedback capacitor as shown in figure 8-124.

$$A\beta = \left(\frac{\frac{R_G}{R_G C_G s + 1}}{\frac{R_G}{R_G C_G s + 1} + \frac{R_F}{R_F C_F s + 1}} \right) \left(\frac{K}{(\tau_1 s + 1)(\tau_2 s + 1)} \right) \quad (8\text{-}124\text{-}1)$$

If $R_G C_G = R_F C_F$ equation 8-124-1 reduces to equation 8-124-2.

$$A\beta = \left(\frac{R_G}{R_G + R_F} \right) \left(\frac{K}{(\tau_1 s + 1)(\tau_2 s + 1)} \right) \quad (8\text{-}124\text{-}2)$$

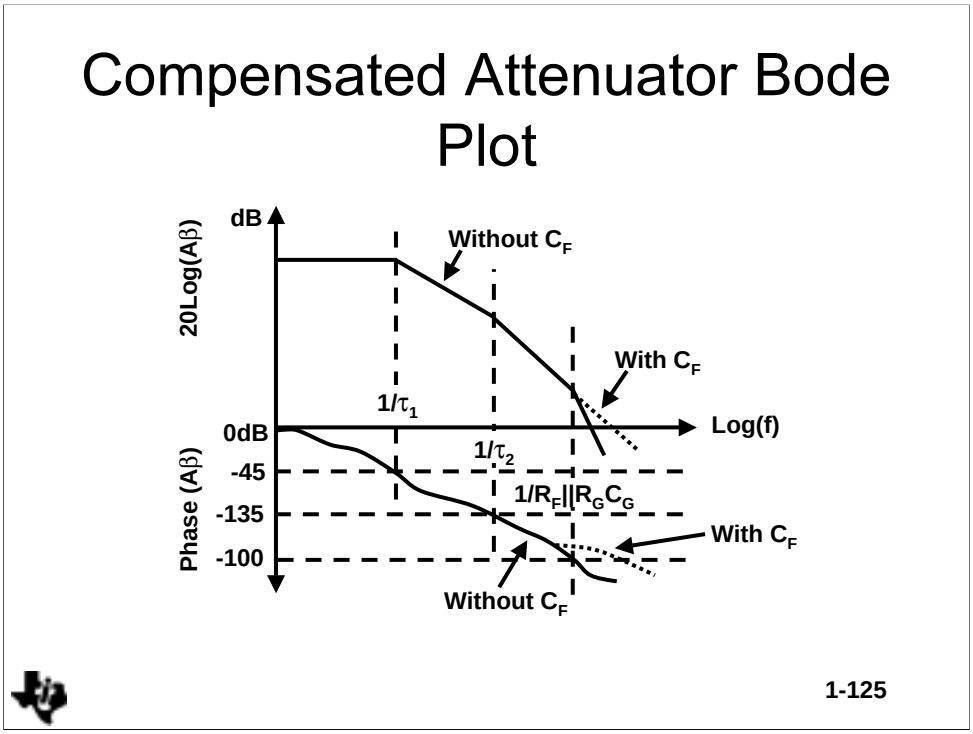

The compensated attenuator Bode plot is shown in figure 8-125. Adding the correct $1/R_FC_F$ breakpoint cancels out the $1/R_GC_G$ breakpoint, the loop gain is independent of the capacitors. Now is the time to take advantage of stray capacitance. C_F can be formed by running a wide copper strip from the output of the op amp over the ground plane under R_F; do not connect the other end of this copper strip. The circuit is tuned by removing some copper (a razor works well) until all peaking is eliminated. Then measure the copper, and have an identical trace put on the printed circuit board.

The inverting and non-inverting closed loop gain equations are a function of frequency, Equation 8-125-1 is the closed loop gain equation for the inverting op amp. When $R_FC_F = R_GC_G$ equation 8-125-1 reduces to equation 8-125-2 which is independent of the breakpoint. This also happens to the non-inverting op amp circuit. This is one of the few occasions when the compensation does not affect the closed loop gain frequency response.

$$\frac{V_{OUT}}{V_{IN}} = -\frac{\frac{R_F}{R_FC_Fs+1}}{\frac{R_G}{R_GC_Gs+1}} \qquad (8\text{-}125\text{-}1)$$

When $R_FC_F = R_GC_G$ $\quad V_{OUT}/V_{IN} = -(R_F/R_G)$ $\quad$ (8-125-2

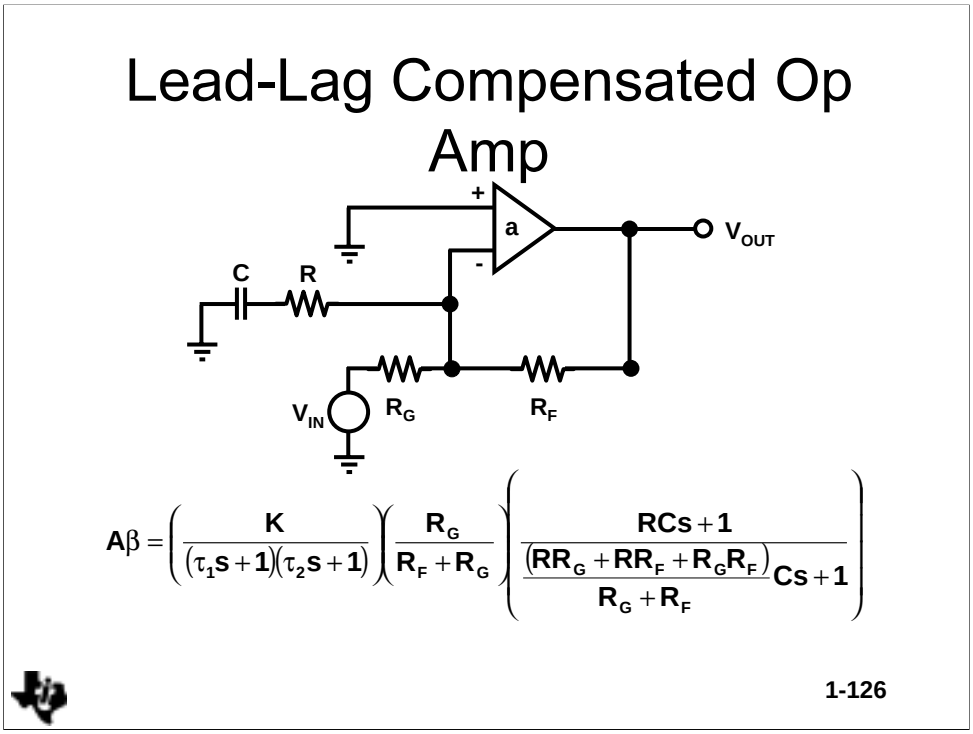

Lead-lag compensation stabilizes the circuit without sacrificing the closed loop gain performance. This type of compensation leads to excellent high frequency performance. The circuit schematic is shown in figure 8-126, and the loop gain is given in equation 8-126-1.

$$A\beta = \frac{K}{(\tau_1 s+1)(\tau_2 s+1)}\frac{R_G}{R_G+R_F}\frac{RCs+1}{\frac{(RR_G+RR_F+R_GR_F)}{(R_G+R_F)}Cs+1} \quad (8\text{-}126\text{-}1)$$

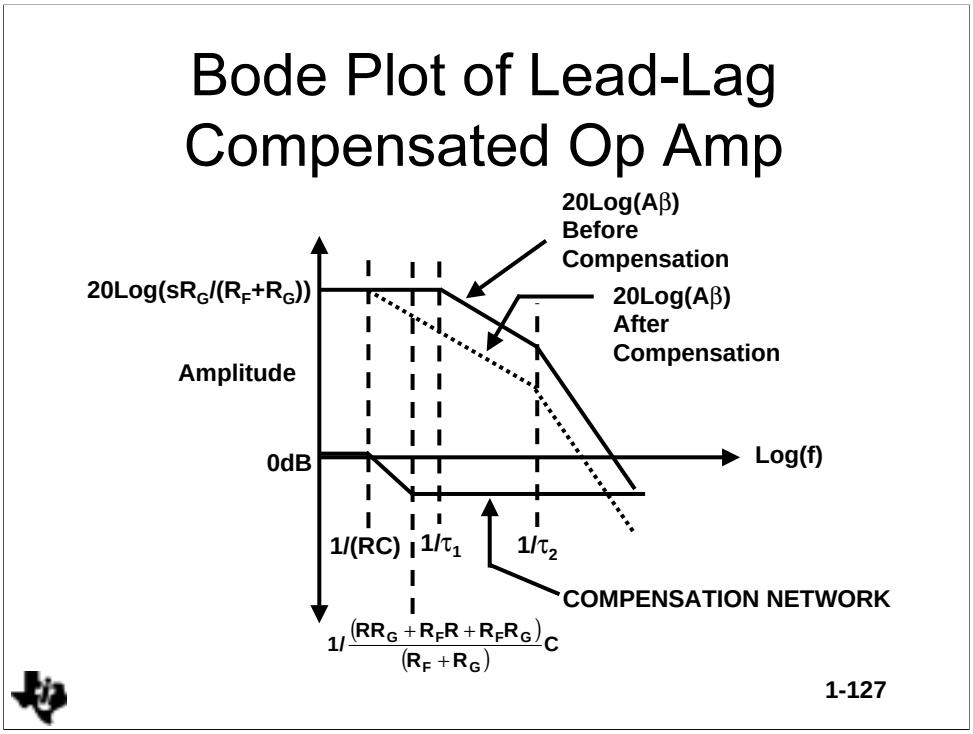

A pole is introduced at $\omega = 1/RC$, and this pole reduces the gain 3dB at the breakpoint. When the zero occurs prior to the first op amp pole it cancels out the phase shift caused by the $\omega = 1/RC$ pole. The phase shift is completely canceled before the second op amp pole occurs, and the circuit reacts as if the pole was never introduced. But, $A\beta$ is reduced by the 3dB or more, so the loop gain crosses the 0dB axis at a lower frequency. The beauty of lead lag compensation is that the closed loop ideal gain is not affected.

Closed Loop Plot of Lead-Lag Compensated Op Amp

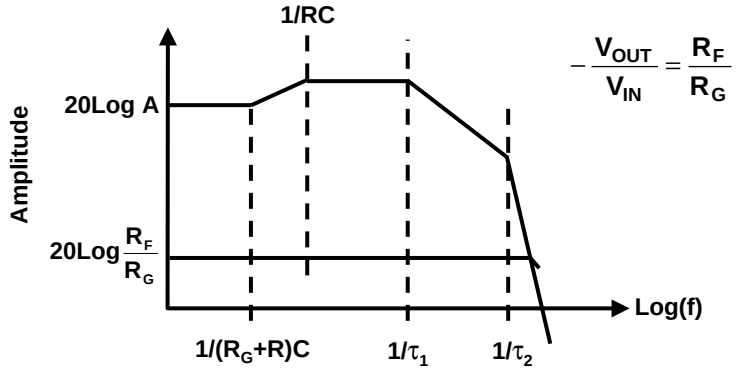

1-128

The Thevenin equivalent of the input circuit is calculated in equation 8-128-1, the circuit gain in terms of Thevenin equivalents is calculated in equation 8-128-2, and the ideal closed loop gain is calculated in equation 8-128-3.

$$V_{TH} = V_{IN}\frac{R+\frac{1}{Cs}}{R+R_G+\frac{1}{Cs}} \qquad \text{(8-128-1)}$$

$$R_{TH} = \frac{R_G\left(R+\frac{1}{Cs}\right)}{R+R_G+\frac{1}{Cs}}$$

$$V_{OUT} = -V_{TH}\frac{R_F}{R_{TH}} \qquad \text{(8-128-2)}$$

$$-\frac{V_{OUT}}{V_{IN}} = \frac{\left(R+\frac{1}{Cs}\right)R_F}{\left(R+R_G+\frac{1}{Cs}\right)\left(\frac{R_G\left(R+\frac{1}{Cs}\right)}{R+R_G+\frac{1}{Cs}}\right)} = \frac{R_F}{R_G} \qquad \text{(8-128-3)}$$

Equation 8-128-3 is intuitively obvious because the RC network is placed across a virtual ground. As long as the loop gain, Aβ, is large the feedback will null out the closed loop effect of RC, and the circuit will function as if it weren't there. Notice that the pole and zero resulting from the compensation occur and are gone before the first amplifier poles come on the scene. This prevents interaction, but it is not required for stability.

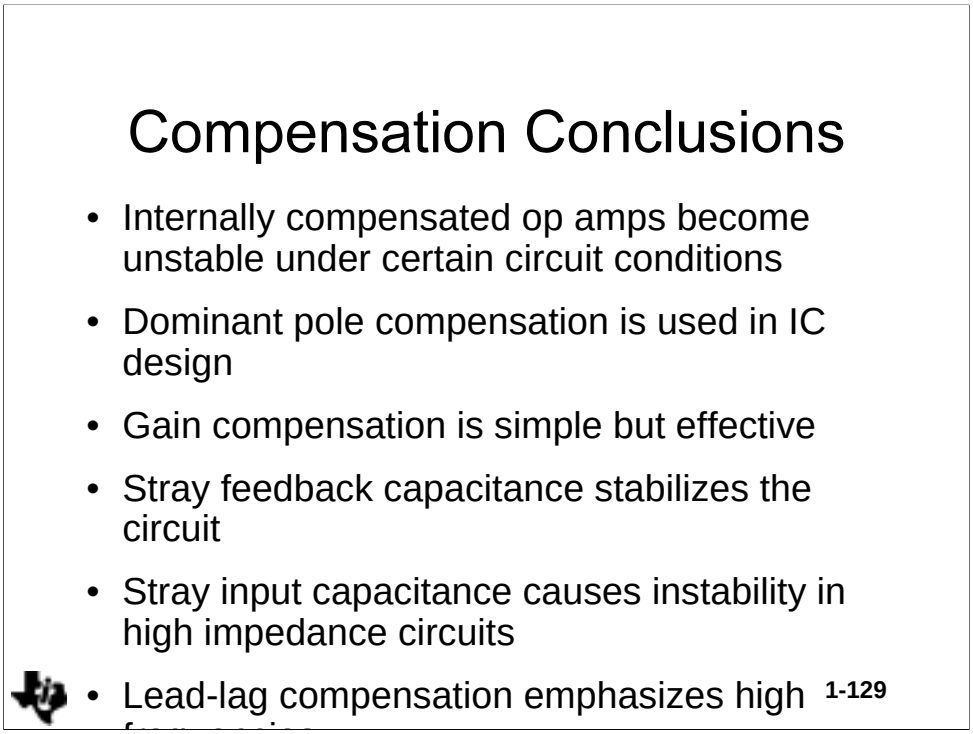

Internally compensated op amps can, and often do, oscillate under some circuit conditions. Internally compensated op amps need an external pole to get the oscillation or ringing started, and stray capacitances often supply the phase shift required for instability. Loads, such as cables, often cause internally compensated op amps to ring severely.

Dominant pole compensation is often used in IC design because it is easy to implement. It rolls off the closed loop gain early, thus it is seldom used as an external form of compensation unless filtering is required. Load capacitance, depending on its pole location, usually causes the op amp to ring. Large load capacitance can stabilize the op amp because it acts as dominant pole compensation.

The simplest form of compensation is gain compensation. High closed loop gains are reflected in lower loop gains, and in turn, lower loop gains increase stability. If an op amp circuit can be stabilized by increasing the closed loop gain, do it.

Stray capacitance across the feedback resistor tends to stabilize the op amp because it is a form of lead compensation. This compensation scheme is useful for limiting the circuit bandwidth, but it decreases the closed loop gain.

Stray capacitance on the inverting input works with the parallel combination of the feedback and gain setting resistors to form a pole in the Bode plot, and this pole decreases the circuit’s stability. This effect is

normally observed in high impedance circuits built with CMOS op amps. Adding a feedback capacitor forms a compensated attenuator scheme which cancels out the input pole. The cancellation occurs when the input and feedback RC time constants are equal. Under the conditions of equal time constants, the op amp functions as though the stray input capacitance were not there. An excellent method of implementing a compensated attenuator is to build a stray feedback capacitor using the ground plane and a trace off the output node.

Lead-lag compensation stabilizes the op amp, and it yields the best closed loop frequency performance. Contrary to some published opinions, no compensation scheme will increase the bandwidth beyond that of the op amp. Lead-lag compensation gives the best bandwidth for the compensation.

Conclusions

The stability criteria often is not oscillation, rather it is circuit performance as exhibited by peaking

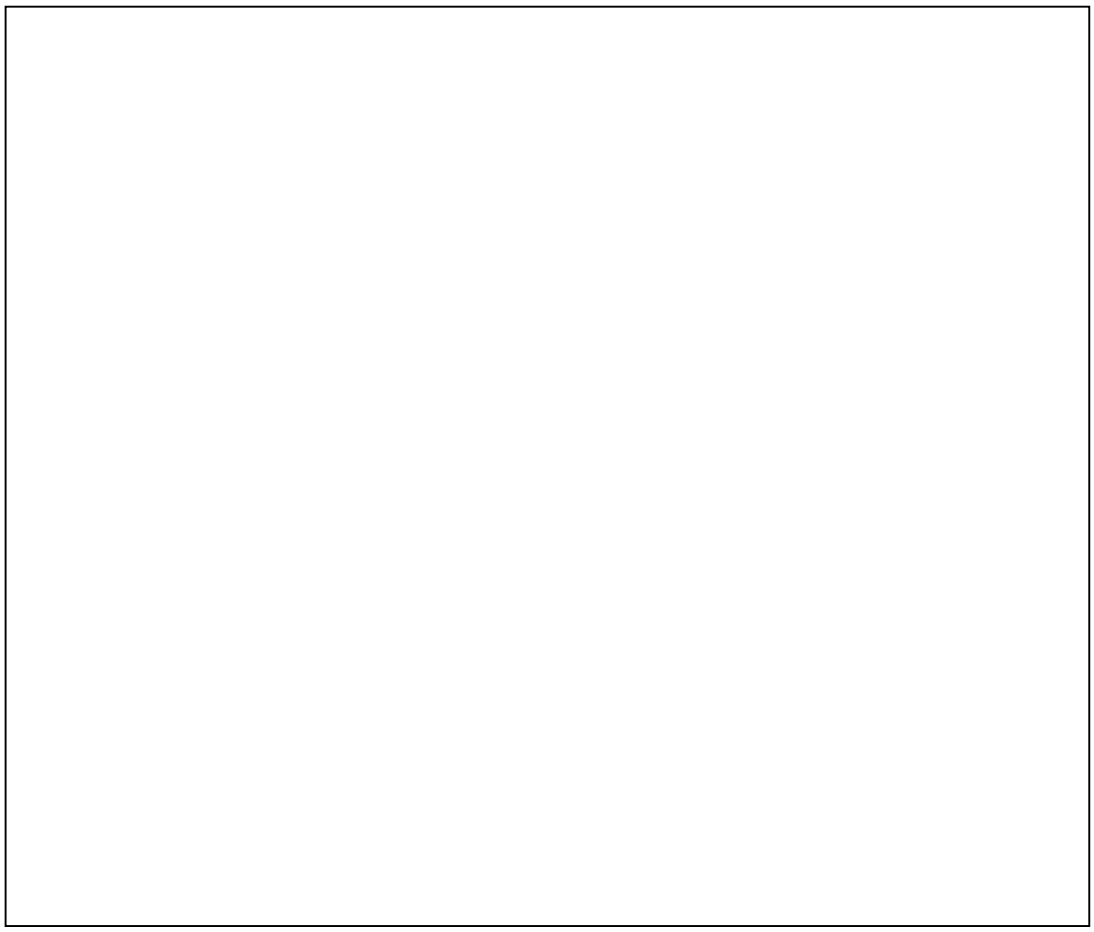

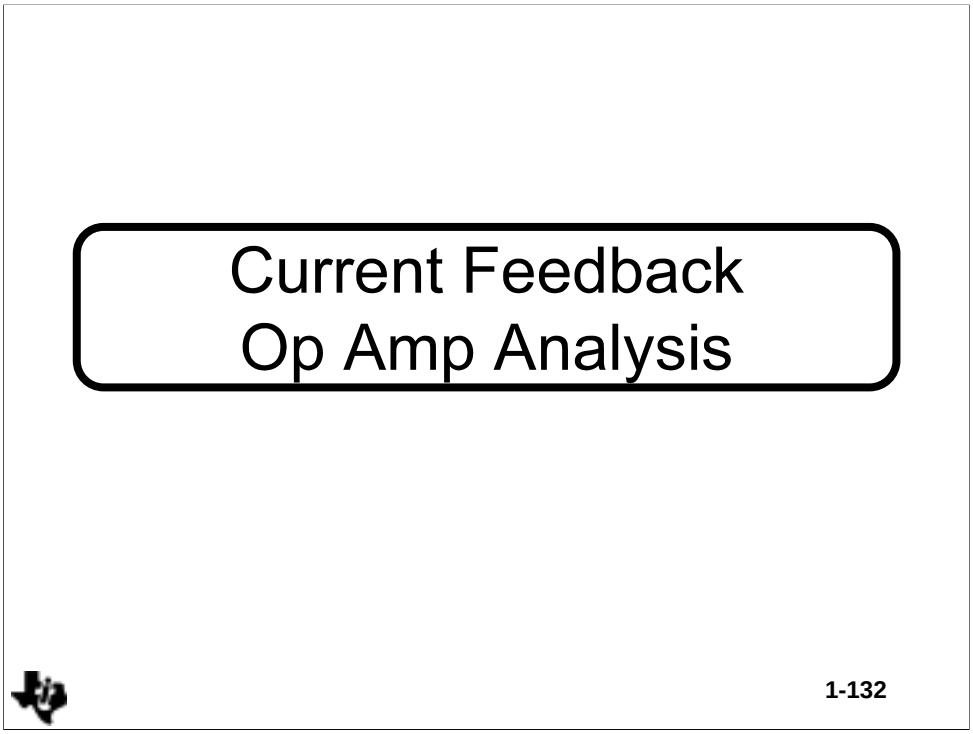

Current feedback amplifiers (CFA) have sacrificed the DC precision of voltage feedback amplifiers (VFB) for speed. This tradeoff results in higher bandwidth, faster slew rate, and a bandwidth that is relatively independent of closed loop gain. Although CFAs do not have the precision of their VFB counterparts, they can be DC coupled in video applications without sacrificing much dynamic range. CFAs have eliminated the AC coupling requirement in high frequency amplifiers because they operate in the GHz range while DC coupled. CFAs have much faster slew rates than VFAs, so they have faster rise/fall times and less intermodulation distortion.

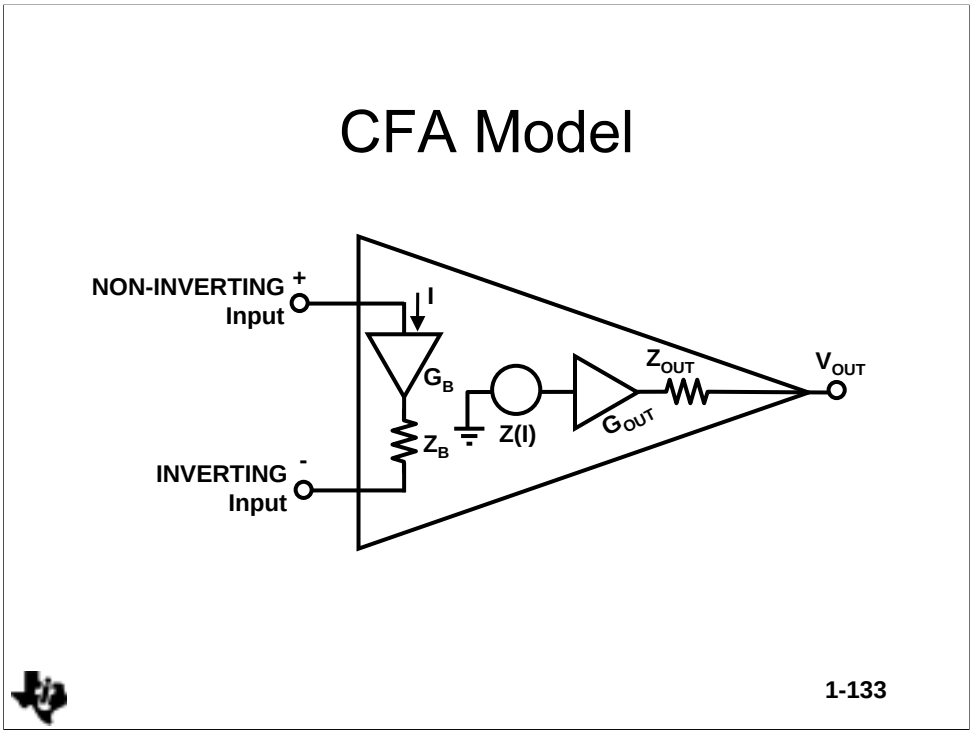

The non-inverting input of a CFA connects to the input of a buffer, so it has a very high impedance similar to a bipolar transistor VFA input. The inverting input connects to the buffer's output, so the inverting input impedance is very low. Z_B models the input buffer's output impedance which is usually less than 50Ω. The buffer gain, G_B, is as close to one as IC design methods can achieve, so it is neglected in the calculations.

The output buffer is used to give the amplifier a low output impedance. Again the gain, G_{OUT}, is very close to one, so it is neglected in this analysis. The impedance of the output buffer can be ignored except when driving very low impedance or capacitive loads. The input buffer's output impedance can't be ignored because affects stability at high frequencies. The current-controlled current source, Z, is a transimpedance. The transimpedance in a CFA serves the same function as the gain in a VFA. Usually the transimpedance is very high, in the MΩ range, so the CFA gains accuracy in the same manner that the VFA does.

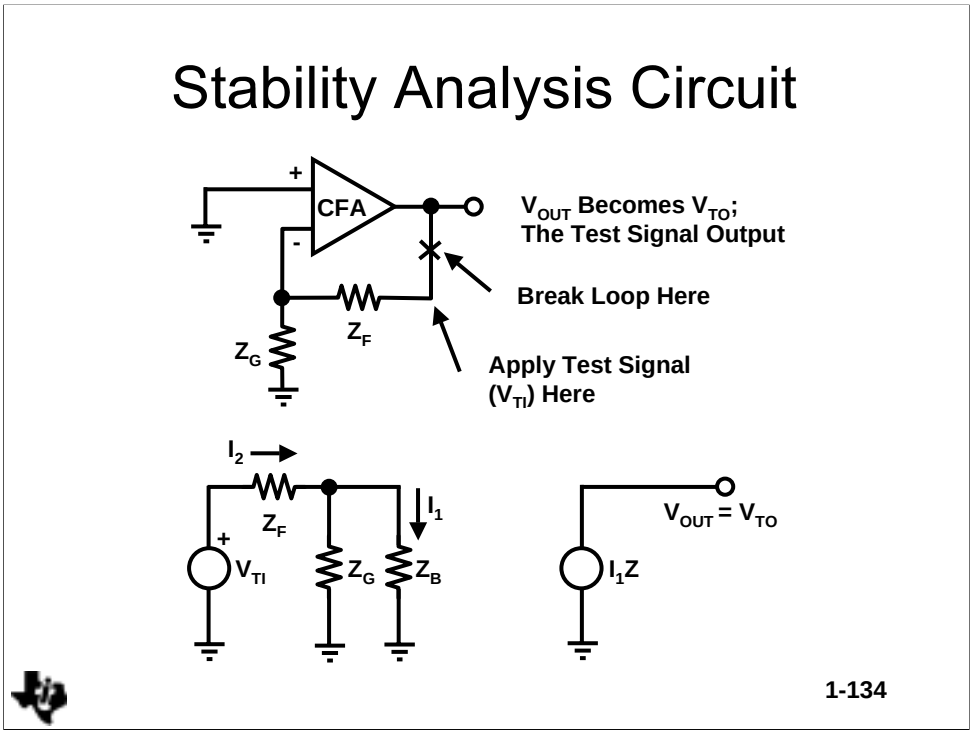

Stability is independent of the input, and stability depends solely on the loop gain, Aβ. The stability equation is developed by breaking the loop at point "X", inserting a test signal, V_{TI}, and calculating the return signal V_{TO}. The input buffer gain, the output buffer gain and the output buffer output impedance has been left out of the circuit to simplify calculations. This approximation is valid for almost all applications.

Stability Analysis

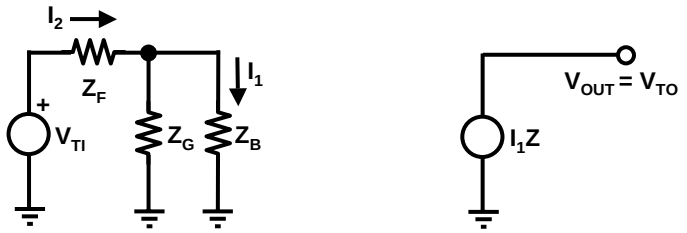

$V_{TO} = I_1 Z$

$V_{TI} = I_2(Z_F + Z_G \| Z_B)$

$I_2(Z_G \| Z_B) = I_1 Z_B$; For $G_B = 1$

$V_{TI} = I_1(Z_F + Z_G \| Z_B)(1 + Z_B/Z_G) = I_1 Z_F \ (1 + Z_B/Z_F \| Z_G)$

$A\beta = V_{TO}/V_{TI} = Z/(Z_F(1 + Z_B/Z_F \| Z_G))$

1-135

The transfer equation is given in equation 9-135-1, and the Kirchoff"s law is used to write equations 9-135-2 and 9-135-3.

(9-135-1 $$V_{TO} = I_1 Z$$

(9-135-2 $$V_{TI} = I_2\left(Z_F + Z_G \| Z_B\right)$$

(9-135-3 $$I_2\left(Z_G \| Z_B\right) = I_1 Z_B$$

Equations 9-135-1 and 9-135-2 are combined to yield equation 9-135-4.

$$V_{TI} = I_1\left(Z_F + Z_G \| Z_B\right)\left(1 + \frac{Z_B}{Z_G}\right) = I_1 Z_F\left(1 + \frac{Z_B}{Z_F \| Z_G}\right) \quad \text{(9-135-4)}$$

Dividing equation 9-135-1 by equation 9-135-4 yields equation 9-135-5 which is the open loop transfer equation which is commonly known as the loop gain.

(9-135-5 $$A\beta = \frac{V_{TO}}{V_{TI}} = \frac{Z}{\left(Z_F\left(1 + \frac{Z_B}{Z_F \| Z_G}\right)\right)}$$

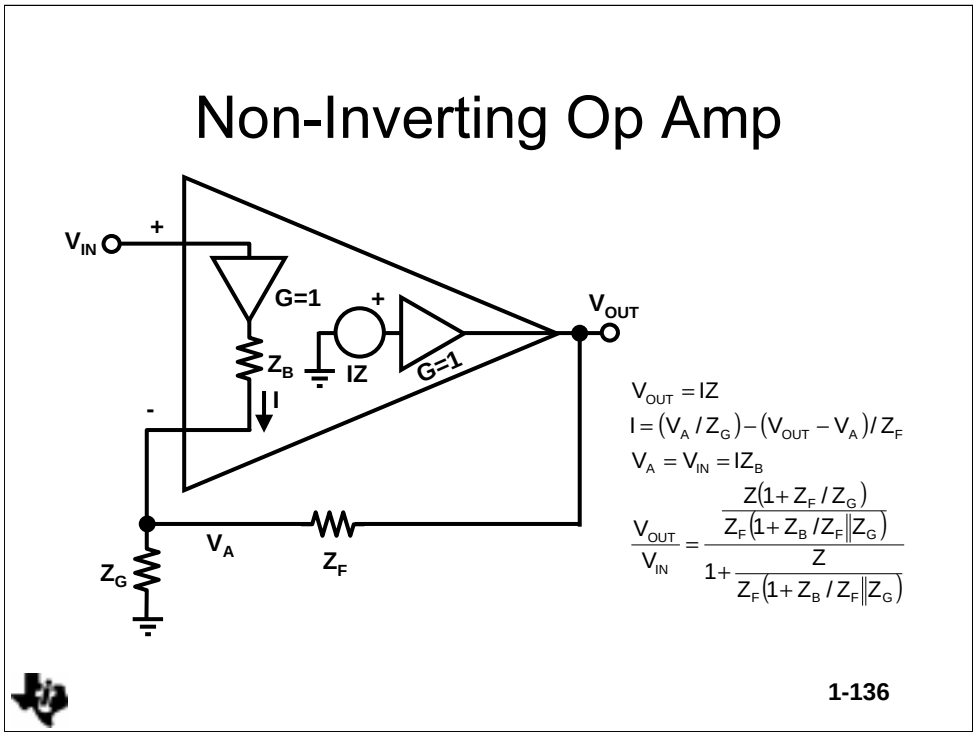

Equation 9-136-1 is the transfer equation, equation 9-136-2 is the current equation at the inverting node, and equation 9-136-3 is the input loop equation. These equations are combined to yield equation 9-136-4 which is the closed loop gain equation.

(9-136-1 $V_{OUT} = IZ$

(9-136-2 $$I = \left(\frac{V_A}{Z_G}\right) - \left(\frac{V_{OUT} - V_A}{Z_F}\right)$$

(9-136-3 $$V_A = V_{IN} - IZ_B$$

(9-136-4 $$\frac{V_{OUT}}{V_{IN}} = \frac{\frac{Z\left(1+\frac{Z_F}{Z_G}\right)}{Z_F\left(1+\frac{Z_B}{Z_F \| Z_G}\right)}}{1+\frac{Z}{Z_F\left(1+\frac{Z_B}{Z_F \| Z_G}\right)}}$$

When the input buffer impedance, ZB, approaches zero equation 9-136-4 reduces to equation 9-136-5.

(9-136-5 $$\frac{V_{OUT}}{V_{IN}} = \frac{\frac{Z\left(1+\frac{Z_F}{Z_G}\right)}{Z_F}}{1+\frac{Z}{Z_F}} = \frac{1+\frac{Z_F}{Z_G}}{1+\frac{Z_F}{Z}}$$

When the transimpedance, Z, is very high the term Z_F/Z in equation 9-5-5 approaches zero, and equation 9-5-5 reduces to equation 9-5-6 which is the ideal closed loop gain equation for the CFA. The ideal closed loop gain equations for the CFA and VFA are identical, and the degree to which they depart from the ideal is dependent on the validity of the assumptions. The VFA has one assumption, that the direct gain is very high, while the CFA has two assumptions, that the transimpedance is very high and that the input buffer impedance is very low. As would be expected, two assumptions are harder to meet than one, thus the CFA departs from the ideal more than the VFA does.

$$\frac{V_{OUT}}{V_{IN}} = 1 + \frac{Z_F}{Z_G} \qquad \text{(9-5-6}$$

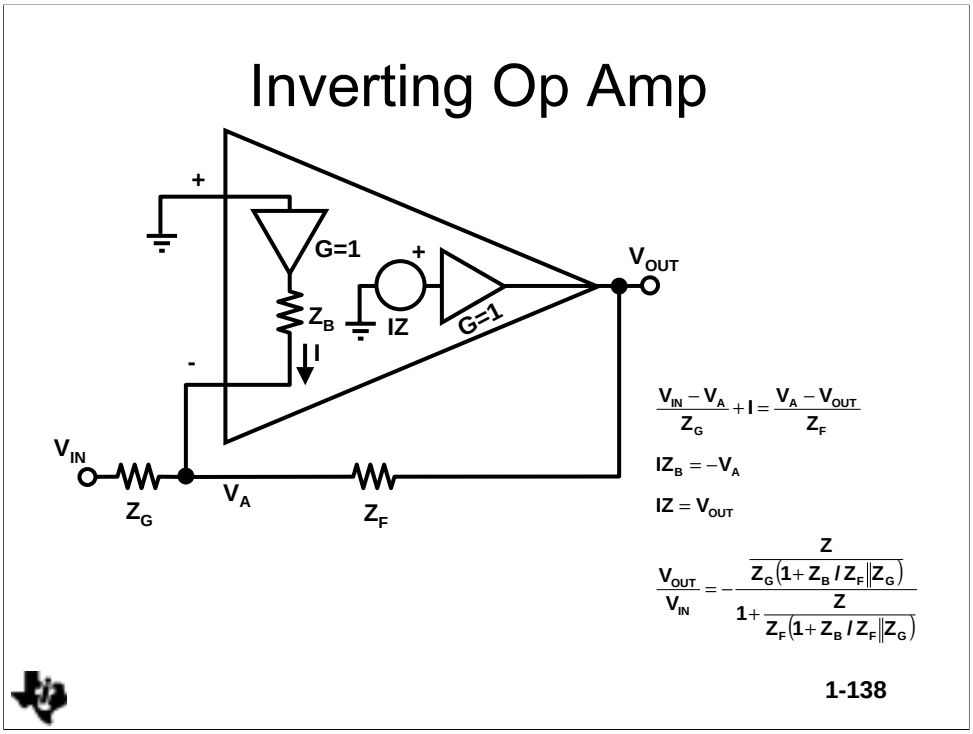

The inverting CFA configuration is seldom used because the input impedance is very low ($Z_B||Z_F + Z_G$). When Z_G is selected as high resistance to swamp out the effects of Z_B, Z_F must also be high. High values for Z_F result in poor bandwidth performance as we will see in the next section. If Z_G is selected as a low value, Z_B, which is frequency sensitive, causes the gain to increase as frequency increases. These limitations restrict the applications for the inverting CFA.

The current equation for the input node is written as equation 9-138-1. Equation 9-138-2 defines the dummy variable, V_A, and equation 9-138-3 is the transfer equation for the CFA. These equations are combined and simplified leading to equation 9-138-4 which is the closed loop gain equation for the inverting CFA.

$$1+\frac{V_{IN}-V_A}{Z_G}=\frac{V_A-V_{OUT}}{Z_F} \quad \text{(9-138-1}$$

$$IZ_B=-V_A \quad \text{(9-138-2}$$

$$IZ=V_{OUT} \quad \text{(9-138-3}$$

$$\frac{V_{OUT}}{V_{IN}}=-\frac{\frac{Z}{Z_G\left(1+\frac{Z_B}{Z_F\|Z_G}\right)}}{1+\frac{Z}{Z_F\left(1+\frac{Z_B}{Z_F\|Z_G}\right)}} \quad \text{(9-138-4}$$

When Z_B approaches zero in equation 9-7-4 it reduces to equation 9-7-5.

(9-7-5 $$\frac{V_{OUT}}{V_{IN}} = -\frac{\frac{1}{Z_G}}{\frac{1}{Z} + \frac{1}{Z_F}}$$

When Z is very large equation 9-7-5 becomes equation 9-7-6 which is the ideal closed lop gain equation for the inverting CFA.

(9-7-6 $$\frac{V_{OUT}}{V_{IN}} = -\frac{Z_F}{Z_G}$$

The ideal closed loop gain equation for the inverting VFA and CFA op amps are identical. Both configurations have lower input impedance than the non-inverting configuration has, but the VFA has one assumption while the CFA has two assumptions. Again, as was the case with the non-inverting counterparts, the CFA is less ideal than the VFA because of the two assumptions. The zero Z_B assumption always breaks down in bipolar-junction transistors as is shown later. The differential amplifier configuration is almost never used because of the gross CFA input impedance mismatch.

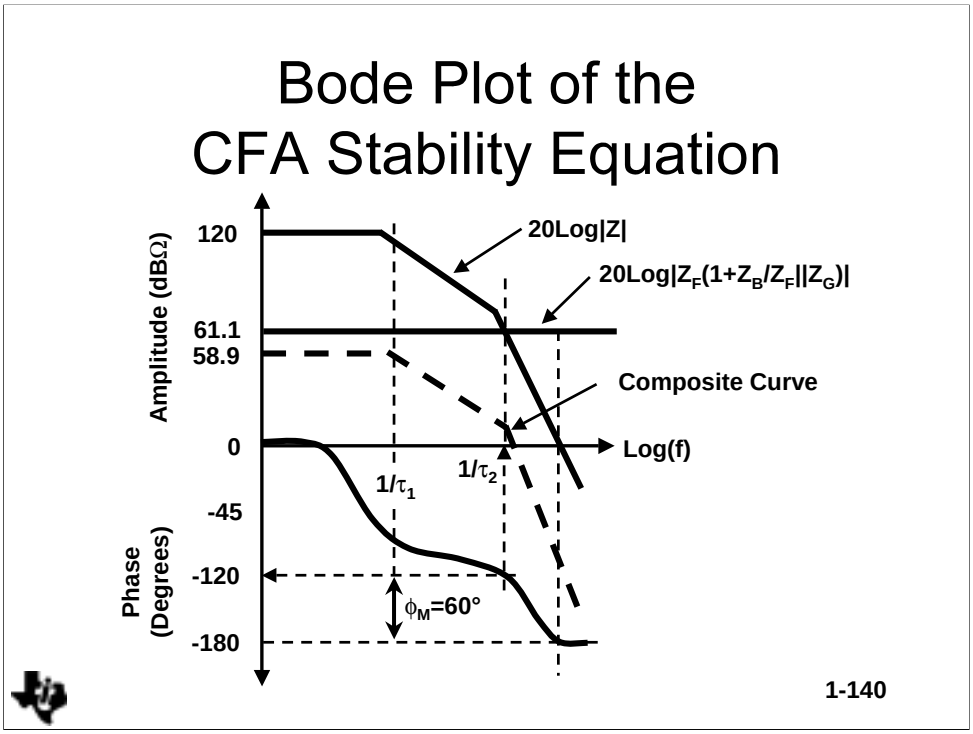

$$A\beta = \frac{V_{TO}}{V_{TI}} = \frac{Z}{\left(Z_F\left(1+\frac{Z_B}{Z_F \| Z_G}\right)\right)} \quad \text{(9-140-1}$$

The two op amp parameters affecting stability are the transimpedance, Z, and the input buffer' output impedance, Z_B. The external components affecting stability are Z_G and Z_F. The external impedances are controlled by the designer, although stray capacitance which is a part of the external impedance sometimes seems to be uncontrollable. Z and Z_B are CFA op amp parameters, and they can't be controlled by the circuit designer, so he has to live with them. We take the log of equation 9-140-1 prior to plotting the logs which are equations 9-140-2 and 9-140-3.

$$20\text{LOG}\left|A\beta\right| = 20\text{Log}\left|Z\right| - 20\text{Log}\left|Z_F\left(1+\frac{Z_B}{Z_F \| Z_B}\right)\right| \quad \text{(9-140-2}$$

$$\phi = \text{Tangent}^{-1}(A\beta) \quad \text{(9-140-3}$$

The log plot, called a Bode plot, is named after H. W. Bode who first developed it in the forties. It enables the designer to add and subtract components of the stability equation graphically.

The Bode plot of the CFA assumes typical values for the parameters:

$$Z = \frac{1\text{M}\Omega}{(1+\tau_1 s)(1+\tau_2 s)} \quad \text{(9-140-4}$$

$$Z_B = 70\Omega \quad (9\text{-}9\text{-}5$$

$$Z_G = Z_F = 1k\Omega \quad (9\text{-}9\text{-}6$$

The transimpedance has two poles and the plot shows that the op amp will be unstable without the addition of external components because 20Log|Z| crosses 0dB axis when the phase shift is 180o. The external components reduce the loop gain 61.1dB, so the circuit is stable because it has 60o phase margin. Notice that the parallel combination of Z_F and Z_G contribute little to the phase margin because Z_B is so small.

When $Z_B = 0\Omega$ and $Z_F = R_F$ the loop gain equals $A\beta = Z/R_F$. Under these conditions stability is determined by Z and R_F, and a value of R_F can always be found to stabilize the circuit. The transimpedance and feedback resistor have a major impact on stability, but the input buffer's output impedance has a minor effect on stability. Since Z_B increases with an increase in frequency, it tends to increase stability at higher frequencies.

Handling CFA Gain Changes

- $A\beta_1 = A\beta_N$
- Equation not valid in all cases

$$\frac{Z}{Z_{F1} + Z_B\left(1 + \frac{Z_{F1}}{Z_{G1}}\right)} = \frac{Z}{Z_{FN} + Z_B\left(1 + \frac{Z_{FN}}{Z_{GN}}\right)}$$

$$Z_{FN} = Z_{F1} + Z_B\left(\left(1 + \frac{Z_{F1}}{Z_{G1}}\right) - \left(1 + \frac{Z_{FN}}{Z_{GN}}\right)\right)$$

1-142

The feedback resistor determines stability and it has an effect on closed loop bandwidth, so it must be selected very carefully. Most CFA IC manufacturers employ applications and product engineers who spend a great deal of time and effort selecting R_F. They measure each non-inverting gain with several different feedback resistors to gather data. Then they pick a compromise value of R_F which yields stable operation with low peaking, and that value of R_F is recommended on the data sheet for that specific gain. Generally this is done for several different gains is anticipation of the various configurations their customers will use.

When the circuit designer strays from the R_F value recommended on the data sheet they get into stability problems or they have low bandwidth. Lowering R_F decreases stability, and increasing R_F decreases bandwidth. What happens when the designer needs to operate at a gain not specified on the data sheet? The designer must select a new value of R_F for the new gain. Assume that $(A\beta)_1$ for a gain of one equals $(A\beta)_N$ for a gain of N to maintain stability at different gains.

(9-142-1
$$\frac{Z}{Z_{F1} + Z_B\left(1 + \frac{Z_{F1}}{Z_{G1}}\right)} = \frac{Z}{Z_{FN} + Z_B\left(1 + \frac{Z_{FN}}{Z_{GN}}\right)}$$

(9-142-2
$$Z_{FN} = Z_{F1} + Z_B\left(\left(1 + \frac{Z_{F1}}{Z_{G1}}\right) - \left(1 + \frac{Z_{FN}}{Z_{GN}}\right)\right)$$

Equation 9-142-2 leads one to believe that a new value for Z_F can easily be chosen for each new gain. This is not the case in the real world; the assumptions don't hold like they should. When you are changing to a new gain which is not specified on the data sheet equation supplies a starting point for R_F, but you must test to determine the final value of R_F.

Input Buffer Output Impedance

- h_{ib} = 50Ω, R_B / (β_0 +1) = 25Ω, Z_B = 75Ω
- Z_B approaches h_{ib} + R_B / β_0
- β_{PNP} is not equal to β_{NPN}

$$Z_B = h_{ib} + \frac{R_B}{\beta_0 + 1}\left(\frac{1 + S\beta_0 / \omega_T}{1 + S\beta_0 / (\beta_0 + 1)\omega_T}\right)$$



1-143

Z_B is important enough to warrant further investigation, so the equation for Z_B is given below.

$$Z_B \cong h_{ib} + \frac{R_B}{\beta_0 + 1}\left(\frac{1 + \frac{s\beta_0}{\omega_T}}{1 + \frac{s\beta_0}{(\beta_0 + 1)\omega_T}}\right)$$

At low frequencies h_{ib} = 50Ω and $R_B/(\beta_0+1)$ = 25Ω, so Z_B = 75Ω. Z_B varies in accordance with the equation at high frequencies. Also, the transistor parameters in the equation vary with transistor type; they are different for NPN and PNP transistors, thus Z_B is dependent on the output polarity. Z_B is a small factor in the equation, but it adds a lot of variability to the op amp.

Tabulation of Pertinent VFA and CFA Equations

Circuit Configuration	Current Feedback Amplifier	Voltage Feedback Amplifier
NON-INVERTING		
Direct Gain	$\frac{Z(1+Z_F/Z_G)}{Z_F(1+Z_B/Z_F\|\|Z_G)}$	**a**
Loop Gain	$Z/Z_F(1+Z_B/Z_F\|\|Z_G)$	$aZ_G/(Z_G+Z_F)$
Closed Loop Gain	$1+Z_F/Z_G$	$1+Z_F/Z_G$
INVERTING		
Direct Gain	$\frac{Z}{Z_G(1+Z_B/Z_F\|\|Z_G)}$	$aZ_F/(Z_F+Z_G)$
Loop Gain	$Z/Z_F(1+Z_B/Z_F\|\|Z_G)$	$aZ_G/(Z_G+Z_F)$
Closed Loop Gain	$-Z_F/Z_G$	$-Z_F/Z_G$



1-144

The equations for the CFA and the VFA are given in the table. The closed loop gain for both op amps is identical, but the remainder of the equations are different. This situation leads the natural conclusion that ideal closed loop performance is identical as long as the approximations remain true. The approximations are true for frequencies much lower than the advertised -3dB frequency, but they fall apart at the -3dB frequency. Both types of op amps have particular niche markets.

VFAs dominate the precision and low voltage/power markets. VFAs dominate the precision market because their differential amplifier input structure enables them to employ matching to eliminate offset voltages and currents. VFAs dominant the low voltage/power market because their circuit configuration enables them to operate in a rail-to-rail mode. VFAs have poor slew rate, and this limits their pulse handling capability.

CFAs have much higher bandwidth because the have much lower impedances in the inverting input circuit and the feedback circuit. The high bandwidth stays high longer in CFAs, thus a 50MHz CFA is usable at much higher frequencies than a 50MHz VFA. The CFA circuit topology enables them to supply slew current from the output structure, thus they have much faster slew rates. The CFA's stability is determine by the value of the feedback resistor.

Stability and Input Capacitance

$$\mathbf{Z_G = \frac{R_G}{1 + R_G C_G s}}$$

$$\mathbf{A\beta = \frac{Z}{\left(Z_B + \frac{Z_F}{Z_G}(Z_G + Z_B) \right)}}$$

$$\mathbf{A\beta = \frac{Z}{R_F \left(1 + \frac{R_B}{R_F \| R_G} \right) \left(R_B \| R_F \| R_G C_G s + 1 \right)}}$$



1-145

When stray capacitance forms on the inverting input node to ground, it causes the impedance Z_G to become reactive. The stability equation for this situation is given below.

$$Z_G = \frac{R_G}{1 + R_G C_G s} \quad \text{(9-145-1)}$$

$$A\beta = \frac{Z}{Z_B + \frac{Z_F}{Z_G^2 + Z_B Z_G}} \quad \text{(9-145-2)}$$

$$A\beta = \frac{Z}{R_F \left(1 + \frac{R_B}{R_F \| R_G} \right) \left(1 + R_B \| R_F \| R_G C_G s \right)} \quad \text{(9-145-3)}$$

Equation 9-145-3 is the stability equation when Z_F is resistive, and there is stray capacitance between the inverting input node and ground. The stray capacitance, C_G, remains a fixed value because it is dependent on the circuit layout. The pole created by the stray capacitance is dependent on R_B because it dominates R_F and R_G. Also, R_B will fluctuate with manufacturing tolerances. As the $R_B C_G$ combination becomes larger the pole moves towards the zero frequency axis. Eventually it interacts with the pole contained in Z, $1/\tau_2$, and instability results.

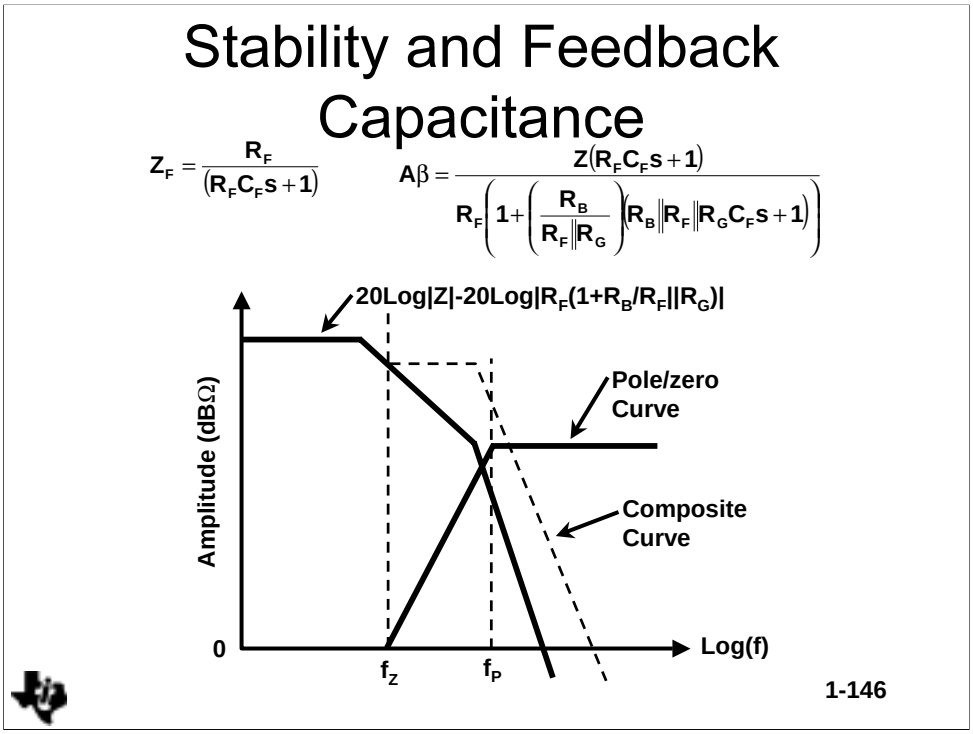

Stability and feedback capacitance

When a stray capacitor is formed across the feedback resistor it adds a pole and zero to the stability equation as written in equations 9-146-1 and 9-146-2.

$$Z_F = \frac{R_F}{1 + R_F C_F s} \quad \text{(9-146-1}$$

$$A\beta = \frac{Z(1 + R_F C_F s)}{R_F\left(1 + \frac{R_B}{R_F \| R_G}\right)(1 + R_B \| R_F \| R_G C_F s)} \quad \text{(9-146-2}$$

This loop gain transfer function contains a pole and zero, thus depending on the pole/zero placement, oscillation can result. The original and composite curves cross the 0dB axis with a slope of -40dB/decade, so either curve can indicate instability. The composite curve crosses the 0dB axis at a higher frequency than the original curve, hence the stray capacitance has added more phase shift to the system. The composite curve is surly less stable than the original curve. Adding capacitance to the inverting input node or across the feedback resistor usually results in instability.

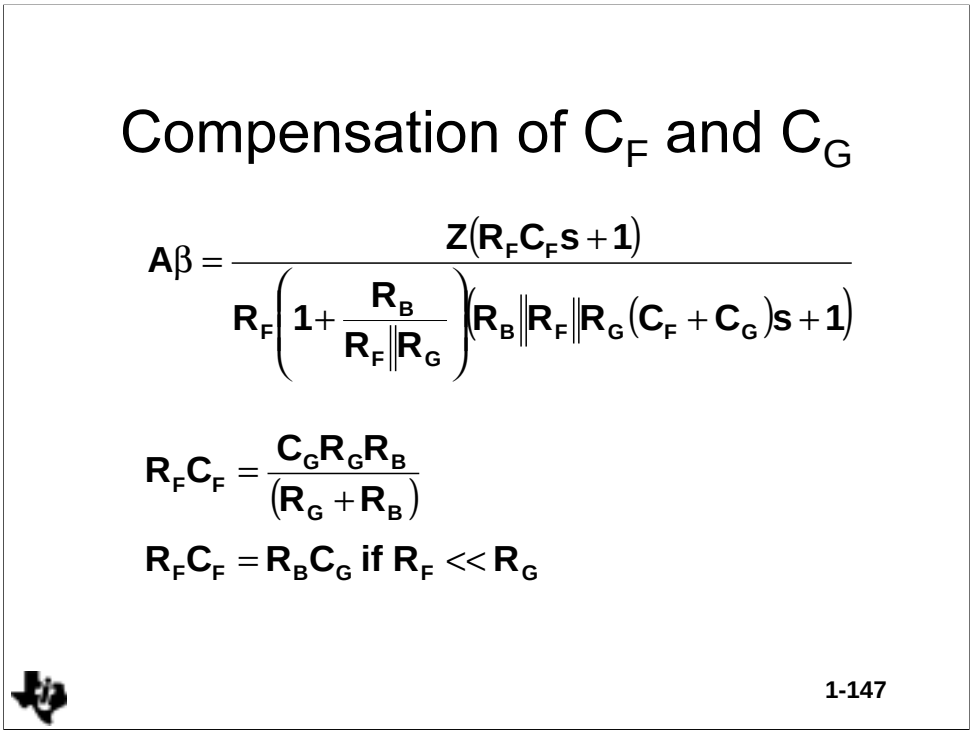

Compensation of C_F and C_G

When C_F and C_G both are present in the circuit they may be adjusted to cancel each other out. The stability equation is equation 9-147-1.

$$A\beta = \frac{Z(1 + R_F C_F s)}{R_F\left(1 + \frac{R_B}{R_F \| R_G}\right)(R_B \| R_F \| R_G (C_F + C_G)s + 1)} \quad \text{(9-147-1)}$$

If the zero and pole in equation 9-147-1 cancel each other the only poles remaining are in Z. Setting the pole and zero in equation 9-147-1 equal to each other yields equation 9-147-2 after some algebraic manipulation.

$$R_F C_F = C_G (R_G \| R_B) \quad \text{(9-147-2)}$$

R_B dominates the parallel combination of R_B and R_G, so equation 9-147-2 is reduced to equation 9-147-3.

$$R_F C_F = R_B C_G \quad \text{(9-147-3)}$$

R_B is an IC parameter, so it is dependent on the IC process. R_B it is an important IC parameter, but it is not important enough to be monitored as a control variable during the manufacturing process. Hence, R_B has widely spread, unspecified parameters, thus depending on R_B for compensation is risky.

CFA Summary

- Feedback resistor controls stability in CFA.
- CFA has transimpedance; VFA has voltage gain.
- CFA has low inverting input impedance.
- CFA has better slew rate response.
- VFA gain falls off very early, while CFA gain stays constant longer.



1-148

The CFA is not limited by a constant gain-bandwidth criteria, so the feedback resistor is adjusted for maximum performance. The stability is dependent on the feedback resistor; as R_F is decreased stability is decreased, and when R_F goes to zero the circuit becomes unstable. As R_F is increased stability increases, but the bandwidth decreases.

The inverting input impedance is very high, but the non-inverting input impedance is very low. This situation precludes CFAs from operation in the differential amplifier configuration. Stray capacitance on the inverting input node or across the feedback resistor always leads to peaking, usually to ringing, and sometimes to oscillations. A prudent circuit designer scans the PC board layout for stray capacitances, and he eliminates them. Breadboarding and lab testing are a must with CFAs. The CFA performance can be improved immeasurably with a good layout, good decoupling capacitors, and low inductance components.

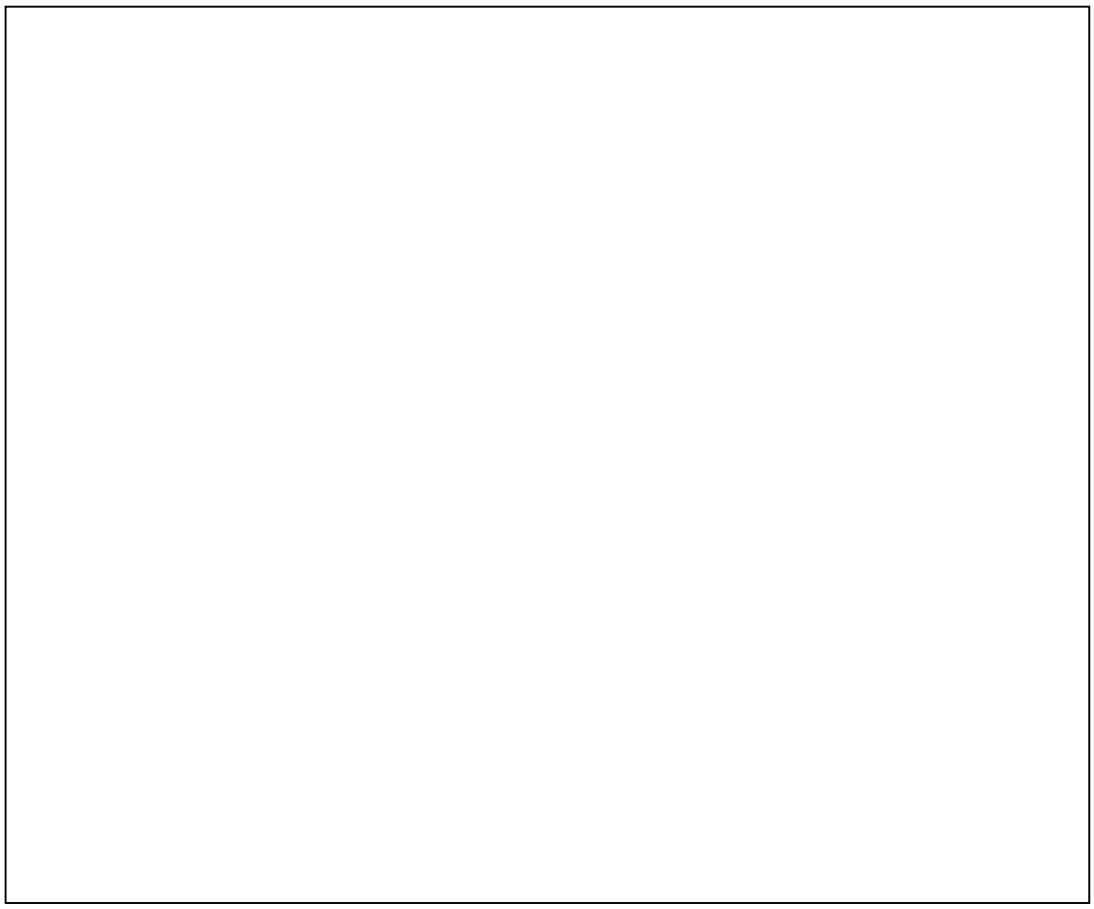

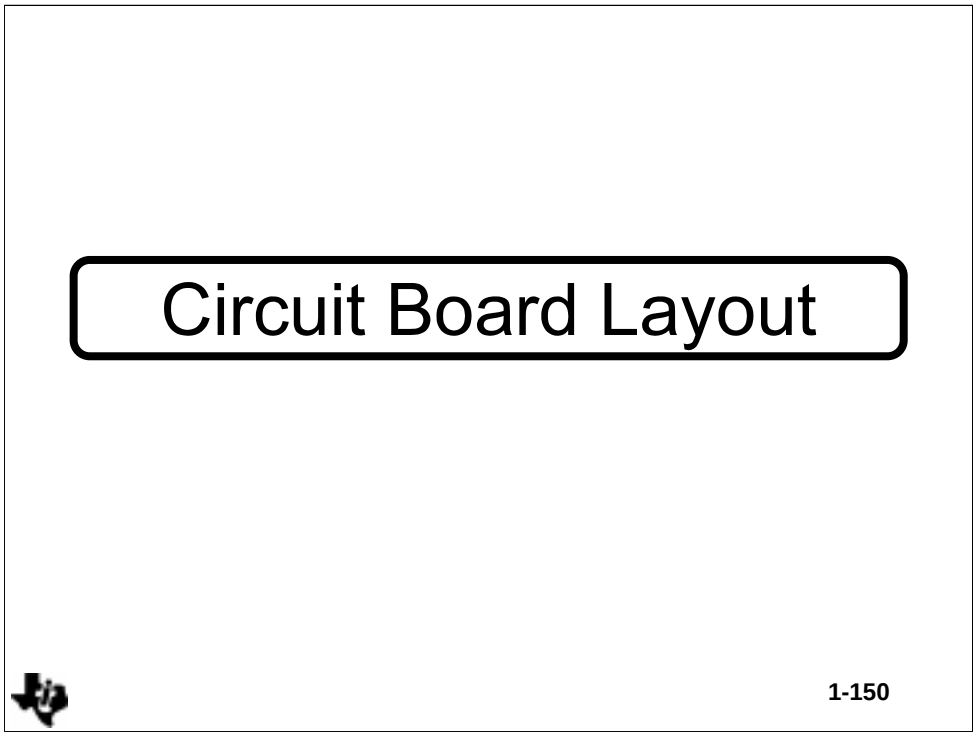

Some engineers aren't interested in circuit board layout, and this trait shows up in the final product. High speed, high precision, low power, or any other application needs attention to detail to be successful. Circuit board layout is a detail which influences every design.

High speed layouts must minimize stray capacitance and inductance because the capacitance kills bandwidth, and the inductance causes peaking. High precision layouts have to be careful about leakage currents, crosstalk, thermally induced drifts, and PC board trace voltage drops. Low power/low voltage layouts stress low PC board trace voltage drops and small packages. Circuit board layout is a challenge regardless of the application.

Murphy's Law

- Anything that can go wrong will go wrong
- Many things that can't go wrong will go wrong
- Things go wrong at the most inopportune times
  - When customers show up
  - When the boss shows
  - Under full power and load
  - Friday at 4:55 p.m.



1-151

Murphy's law is not a joke because it prevails too much to be anything besides truth. The only way to beat Murphy's law is to carefully look under every rock, into every nook and cranny, and at everything obvious to find the snake before it bites you.

PCB Trace Resistance

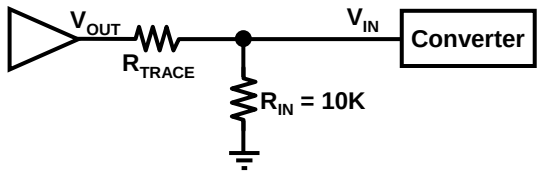

- R_{TRACE} is approximately 0.1Ω if the trace is 2.5 inches long

$$V_{IN} = \frac{R_{IN}}{R_{TRACE} + R_{IN}} = .99999$$

Error = 1-.999 = .00099%

- Can't achieve 18 bits accuracy
- *KEEP TRACES SHORT*

1-152

Most engineers only consider the PC board trace resistance when power circuits are considered. An average PC board trace two inches long has a resistance of 0.1Ω. The trace resistance forms a voltage divider with the input resistance of the next circuit (10kΩ), and the resulting voltage divider causes a 0.00099% error. This error precludes the circuit from achieving the 0.0004% error allowed for an eighteen bit converter. Worse yet, copper resistance is temperature sensitive, thus a DC offset and a drift error are introduced into the circuit by the trace resistance. ***Keep traces short.***

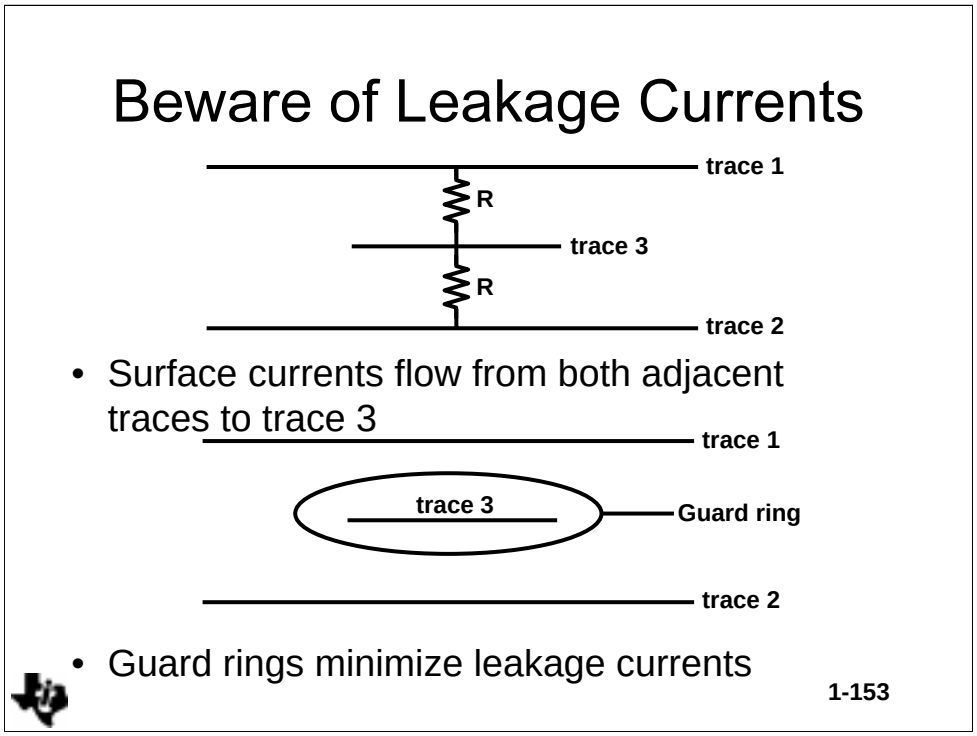

High impedance circuits are susceptible to leakage currents through the PC board surface. First and foremost, the PC board must be thoroughly cleaned and dried. The PC board must be kept dry to keep the leakage low. Guard rings are put around sensitive inputs to protect them from adjacent trace leakage. The guard ring must be connected to a low impedance point at the same potential as the protected PC board traces. The leakage currents are then absorbed and shunted away by the guard ring.

Stray Capacitance

- Causes coupling of noise onto signal lines
- Reduces bandwidth
- Causes oscillation
- Reduce by removing ground plane under critical nodes
- Reduce with short, narrow traces
- IC wire bonds



1-154

When signal lines get too close the stray capacitance between the lines couples noise (signals) from one line to the other. Signal lines that are run close to noise sources pick up noise because the stray capacitance couples the noise onto the signal lines. Stray capacitance on the input node of an op amp decrease the bandwidth, and can cause the op amp to become unstable. Stray capacitance on the input node or across the feedback resistor of a current feedback op amp almost certainly causes instability.

The stray capacitance around critical nodes is reduced by eliminating the ground plane beneath the node. Short, narrow, widely spaced traces reduce the stray capacitance. If all else fails, and you still think that stray capacitance is coupling noise into your signals, check the IC. IC bond wires have enough stray capacitance to couple noise.

Faraday Shields

- Run wires with one end grounded in parallel to signal wires

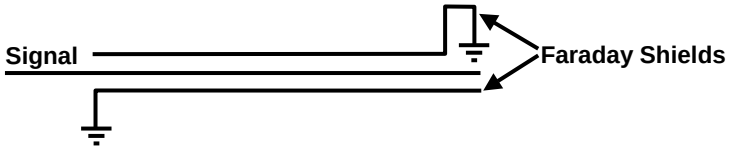

- Faraday Shield wires reduce noise coupling
- Steel covers over critical circuits

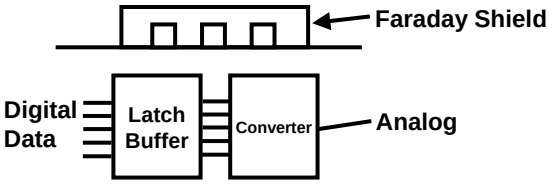

1-155

Faraday shields protect a circuit, wire, or trace by intercepting the interfering signal, and shunting it to some low impedance return path such as ground. When two wires are run adjacent to each other they crosstalk to each other causing noise. This situation is exacerbated when one wire handles digital signals, while the other wire handles analog signals. Running a third wire that has one end grounded between the two wires creates a Faraday shield, thus reducing the noise pickup considerably.

Sensitive broadband circuits such as high frequency receiver front ends must be protected from radiated signals. The simplest and most effective protection is to enclose the sensitive circuitry in a electromagnetically conductive box; a Faraday shield. Connect the box to ground. Rapidly changing data on digital lines makes an excellent noise source, and when analog circuits aren't protected from the noise they pick it up. Inserting a latch between the noisy digital lines and the analog circuits buffers the analog circuits from the noise.

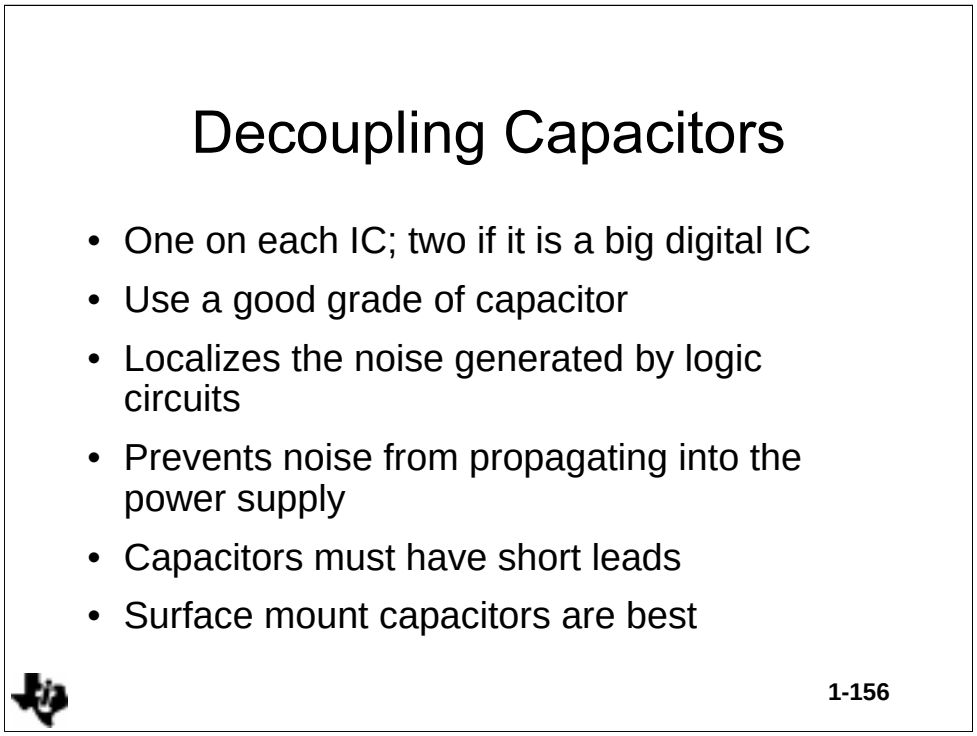

Decoupling capacitors are required on all circuits when sensitive analog circuits are on the same PC board. Digital ICs create current spikes in the supply and return lines when their output changes state, and the power circuit distribution impedance transforms current spikes into voltage spikes on the power lines. Decoupling capacitors confine the circulation of the current spikes to the local area, thus decoupling capacitors prevent the spread of power line noise.

Beware, there are many cheap decoupling capacitors which are not effective because they have a low self-resonant frequency. Purchase a good quality decoupling capacitor with specified parameters, and they will do a good job for you. Decoupling capacitors must have short leads or the lead inductance resonates with the capacitor; this is why surface mount capacitors work best in high frequency applications.

Route Signals Wisely

- Keep signal and return together to prevent single ended noise
- Prevent loops which can become transformers
- Beware of cables
  - Mutual inductance
  - Capacitive load
  - Crosstalk
- Balance voltage drops
- Route analog and digital signals separately



1-157

Routing signals is always a chore because it is so easy to pick up noise. The best signal routing method is terminated cable. Video and test systems employ terminated cable, but it is too expensive for many applications. When using cables always be aware of the existence of mutual inductance, stray capacitance, and crosstalk because these three items cause most cable problems. Ribbon cables can have a lot of crosstalk, and this can be prevented by protecting the signals with a ground wire interspersed between the signal wires to act as a Faraday shield. Only terminate the ground wires at one end.

There are going to be impedances causing voltage drops in the power distribution system because nobody can achieve perfection. Arrange for the voltage drops to be equal in both power lines, so they can be rejected by the common-mode rejection capability of the receiving circuit. Consider routing analog and digital signals separately to prevent noise coupling.

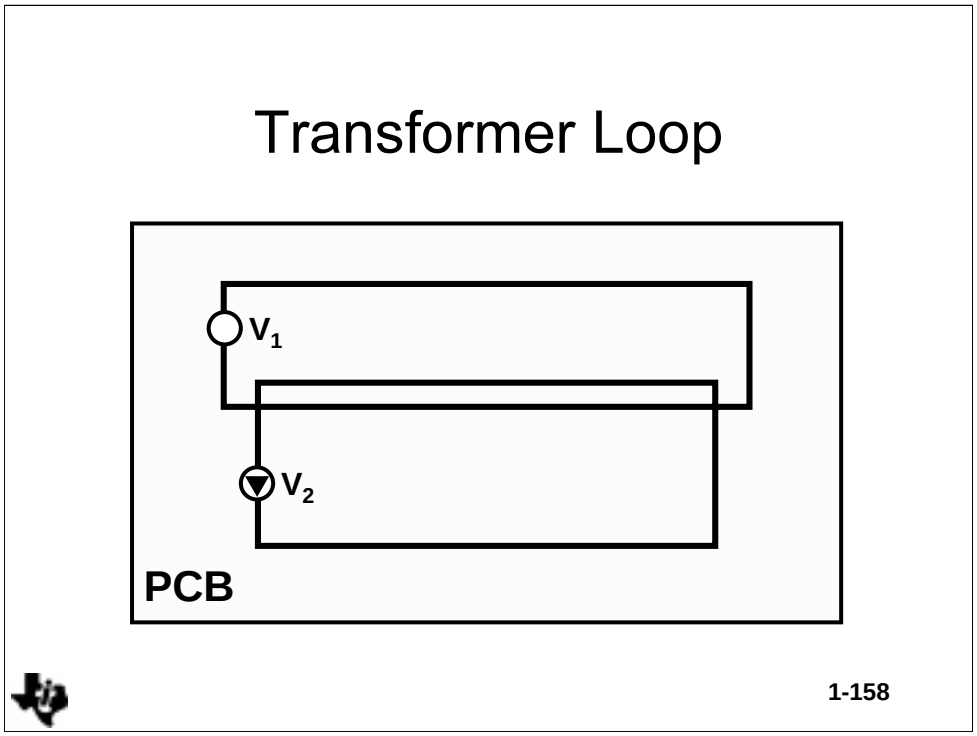

The two loops cross over, causing potential transformer action. The transformer is a single-turn air core type, and it is a poor transformer, but if its coupling capability is 10^{-6} times the input, it will couple 1 µV/V. This precludes high precision circuits because the coupled noise is single-ended, so it can be discriminated from noise.

Ground

- Use a plane if possible
- A grid is next best thing to a plane
- Ground return paths have inductance and resistance
- Keep return path impedance low
- Keep high currents out of signal ground
- Separate analog and digital grounds; tie together at one point
- Consider a star ground



1-159

The lowest power distribution impedance is a plane because of its low resistance and short path. The best recommendation is to distribute power and ground with planes. This may not be accomplishable because of cost and signal routing requirements, so when a plane can't be used a grid is the next best choice. The grid accomplishes most the things a plane does, but it also allows traces to be run between the grid lines. Both methods keep the return impedance low.

Narrow traces and small wire do not make suitable ground returns because their inductance is too high. The inductance causes peaking when transient currents flow in the return paths, and the peaking makes the noise situation worse. Separating analog and digital ground keeps the digital noise out of the analog ground system. The two grounds should be kept separate as much as possible, but some A/D and D/A converters require that analog and digital ground be connected together at the IC pins. In any case, the analog and digital ground must be connected together at the power supply. A star ground has one central point with legs going out to each circuit in a star like manner. Star grounds are usually employed on systems, but occasionally they are very effective on large PC boards that don't have ground planes.

Beware of Inductance

- Open wire has approximately 1nH per foot
- PC traces have approximately 10nH per inch
- Cables are inductive
- Wire bonds are inductive
- Inductance causes peaking



1-160

Inductors are all over the place, and they cause peaking which emphasizes ground spikes generated by logic and fast switching circuits. Open wire has from 1 to 10nH per foot. PC board traces have approximately 10nH per inch. A short trace or piece of wire can get to 10 nH fast, and 10 nH has an impedance of approximately 6.3Ω at 100 MHz. A current spike from a logic gate can be 50mA, so the noise generated across the inductor is 315mV.

Cables are made from wire, thus they are inductive. This means that cables are capacitive and inductive, hence cables have their own LRC circuit, and they can resonate. Wire bonds, connector pins, and, PC board connectors are inductive. Sometimes it is advisable to parallel pins to get the inductance down.

Resistors

- Resistors have parallel capacitance and series inductance
- Power resistors will couple heat to circuits
- High value resistors are less stable
- High value resistors change value when voltage is applied
- Wirewound resistors are highly inductive
- All resistors have noise



1-161

Resistors have parasitic components. The worst offender is a parallel capacitor which kills the bandwidth in VFAs or causes oscillation in CFAs. Power resistors are made so that they can dissipate large wattage, but the resultant heat couples to adjacent circuits causing thermal drift. High value resistors have a tendency to change resistance while under the stress of applied voltage thus leading to non-linear operation. High value resistors are drift prone, so it might be wiser to use two smaller value resistors rather than a high value one.

Wirewound resistors are highly inductive, so they should be avoided in high frequency circuits. Many potentiometers are wirewound, and these parts are not suitable for high frequency work. Use a cermet potentiometer when high frequency potentiometer is required. All resistors have Johnson noise. High value resistors are worse, and carbon film resistors are one of the least offensive.

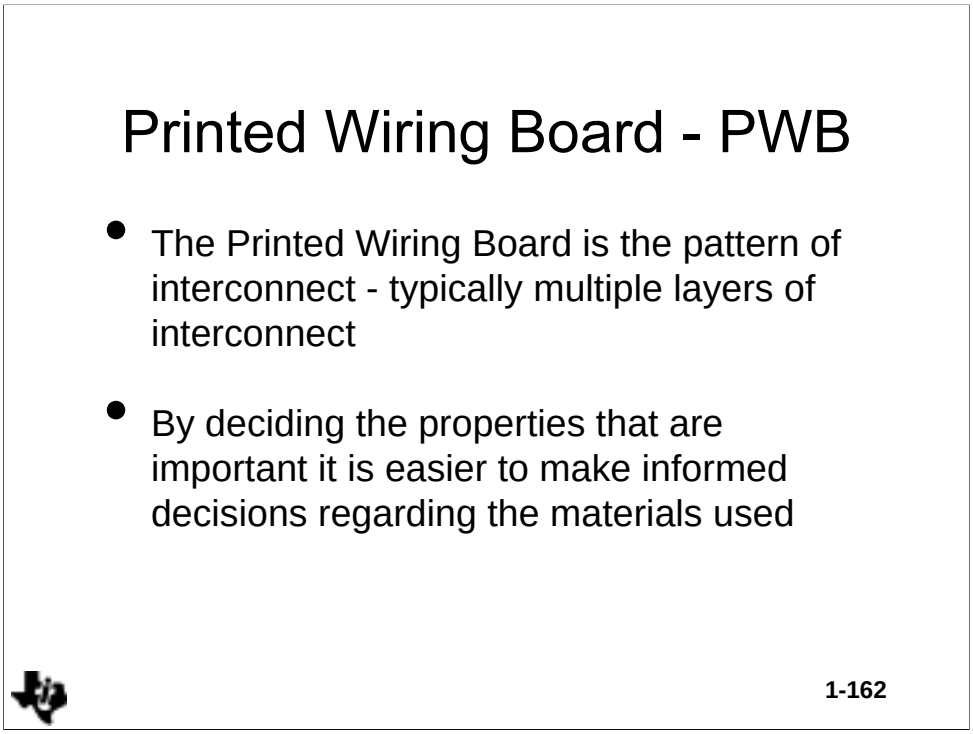

An increasingly important component which the designer often overlooks is the Printed Wiring Board - PWB. The decisions regarding materials used to make the PWB is typically made by the PWB manufacturer, but an understanding of the material most suited for the intended application and its advantages and disadvantages help to ensure the product performs as intended.

The most popular laminates are:-

FR-4 & FR-5 (FR - Flame Retardant),

Multiple plies of epoxy-resin impregnated woven glass cloth

CEM-1, CEM-3

Composite having dissimilar core material, e.g.paper core impregnated with epoxy resin.

GI

Polyimide resin woven glass cloth

Summary of Board Material Factors

- Mechanical
  - Flexural Strength
  - Glass transition temperature
  - Punching properties
- Electrical
  - Dielectric strength
  - Dielectric Breakdown
  - Dielectric Constant - Permittivity
  - Characteristic impedance
  - Propagation delay
- Flammability
  - UL evaluation system



1-163

The properties to consider in choosing the PWB material include

Mechanical

Glass Transition is a measure of how well a laminate resin system resists softening from heat.

Electrical

Dielectric constant is a measure of the ability of an insulating material to store electrostatic charge - important at higher frequencies.

Characteristic impedance is the impedance that a fast edge would encounter, typically in digital circuits a value of 100Ω - 120Ω for TTL.

The impedance varies with the dielectric thickness and line width.

The propagation delay varies with the dielectric thickness and track width, typically 0.15nS per inch.

Flammability

	Extinguish time	Combustion time	Drip test
94V-0	<10s	<10s	<30s
94V-1	<30s	<250s	<60s
94V-2	<30s	<250s	<60s

note: 94V-2 material is allowed to drip flaming particles, burning briefly

Non-Ideal Conditions



DC Input Referred Errors

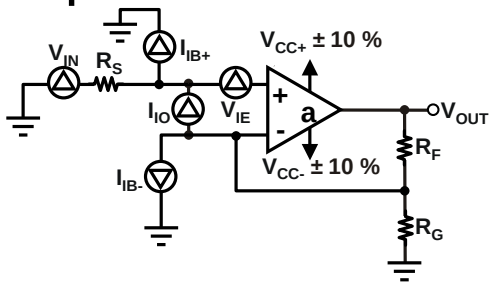

Input Offset Errors:

$V_{IE} = V_{IO} + V_{CMRR} + V_{kSVR} + V_N$

$I_{IB} = (I_{IB+} + I_{IB-})/2$

$I_O = |I_{IB+} + I_{IB-}|$

Gain Related Error:
(Noninverting Amplifier)

$$\frac{V_{OUT}}{V_{IN}} = \left(1 + \frac{R_2}{R_1}\frac{a}{1 + \frac{aZ_G}{Z_G + Z_F}}\right)$$

$\beta = R_1/R_1 + R_2$

1-165

DC Input Referred Errors

The DC accuracy of an analog system is mainly limited by two parameters: the input offset errors and the gain-related error. The total input offset voltage is the sum of the input offset voltage, the input bias current, the common-mode rejection ratio and the supply voltage rejection ratio of the op amp. The total input offset voltage causes a DC output error. The loop gain is an important DC parameter because it is inversely proportional to the error. Ideally, this gain is infinite, however in reality it will be typically in the range of 100 dB at DC and rolls off at high frequencies.

Input Offset Voltage (V_{IO})

- **Input offset voltage is amplified by op amp gain**

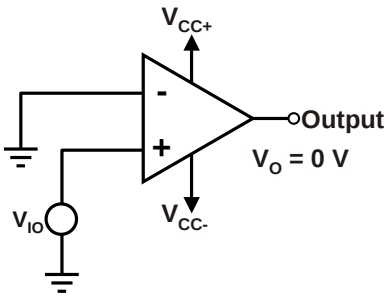

Parameter*	Technology		
	BiPolar @ V_{CC} = ± 15 V	BiFET @ V_{CC} = ± 15 V	CMOS** @ V_{CC} = 5 V
V_{IO} (typ)	10 µV	0.3 mV	80 µV
V_{IO} (max)	25 µV	1.5 mV	200 µV
$\frac{\Delta V_{IO}}{\Delta T}$	0.1 µV/°C	5 µV/°C	0.5 µV/°C

*** Typical parameters for good devices**
**** CMOS devices except specials like chopper op amp**

For a 5 V ADC:
10 bit: 1 LSB = 4.88 mV
12 bit: 1 LSB = 1.22 mV



1-166

Input Offset Voltage (V_{IO})

An ideal op amp if both inputs are connected to ground would provide an output voltage of 0 V because the differential and common-mode voltage in that case is zero. However, the real op amp shows an output voltage which is not equal to zero. A small input offset voltage V_{IO} between the differential inputs is imaginable, and this input offset voltage forces an output voltage other than zero.

The input offset voltage V_{IO} of an operational amplifier is the voltage that must be applied between the two input terminals to get an output voltage of 0 Volt. The voltage V_{IO} may be positive or negative, and this offset voltage is caused by the mismatch between input transistors of the op amp's differential input stage. The voltage, V_{IO}, is amplified with the gain of the amplifier. This is the open loop gain, unless external components configure the op amp for a smaller gain. In addition, the input offset voltage is dependent on the ambient temperature. The variation is from 0.1 µV/°C to several tenths of µV/°C.

Bipolar op amps have typically the lowest V_{IO} and temperature drift. CMOS devices can achieve offset voltages of around 100 µV, which is better than BiFETs, but they cannot compete with the best bipolar devices. However, chopper stabilised CMOS op amps achieve a very low input offset voltage down to 1 µV (max).

Compensation of the Input Bias Current

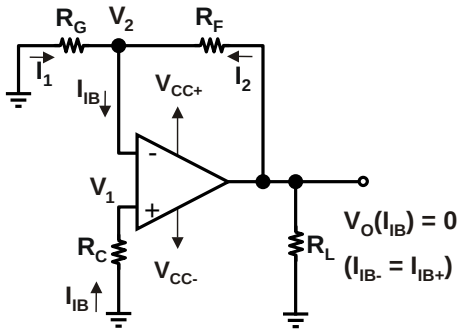

Compensation Resistor R_C

$$R_C = \frac{R_G \times R_F}{R_G + R_F}$$

The input bias current will be compensated, if the voltages V_1 and V_2 are equal.

1-167

Compensation of the Input Bias Current

The effect of the input bias current can be compensated, if the voltage drop V_2 at the inverting input and the voltage drop V_1 at the noninverting input of the op amp are equal. The voltage V_2 is calculated as follows:

$$V_2 = \frac{R_G \times R_F}{R_G + R_F} \times I_{IB-} \quad \text{(11-167-1}$$

Assuming that the inverting and noninverting bias currents are equal and write equation 11-167-2:

$$R_C = \frac{R_G \times R_F}{R_G + R_F} \quad \text{(11-167-2}$$

The resulting voltage V_1 is under these conditions equal to the voltage V_2:

$$V_1 = R_C \times I_{IB+} = \frac{R_G \times R_F}{R_G + R_F} \times I_{IB-} \quad \text{(11-167-3}$$

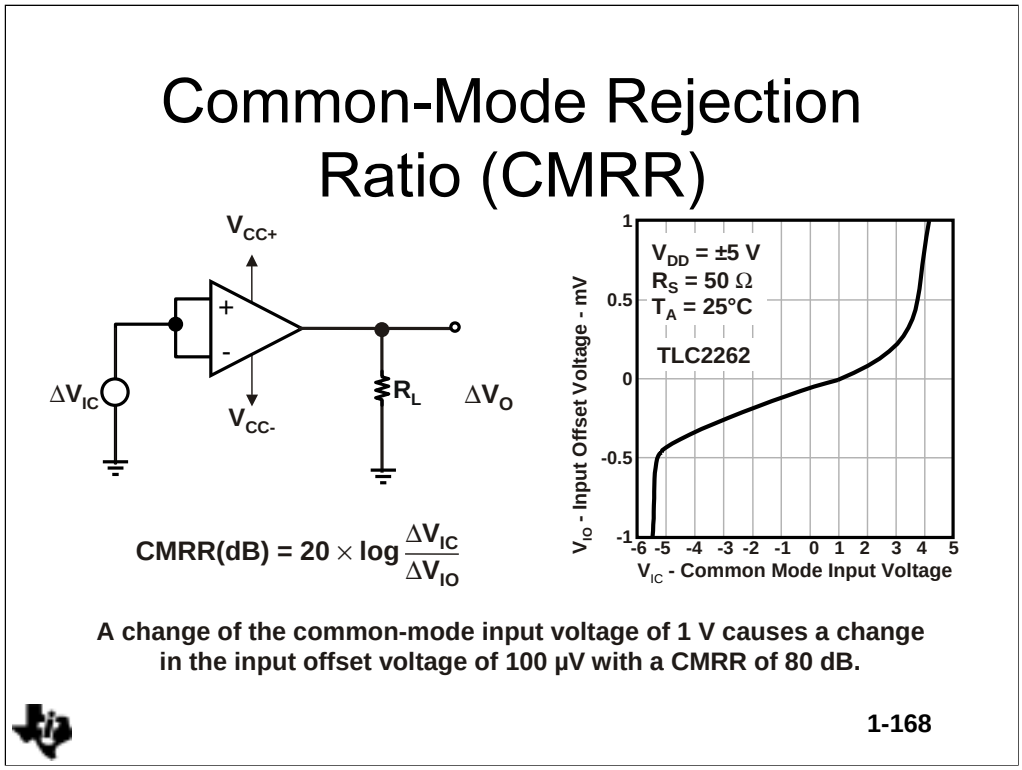

Common-Mode Rejection Ratio

The common-mode rejection ratio of an ideal op amp is infinite. However, a real op amp produces a small output voltage if a common-mode voltage is applied to the inputs. The capability of rejecting the common-mode voltage is called the common-mode rejection ratio, and it is defined as follows:

$$\text{CMRR} = 20 \times \log \frac{\Delta V_{IC}}{\Delta V_{IO}} \qquad \text{(11-168-1}$$

For an op amp with a common-mode rejection ratio of 80 dB, we get:

$$\frac{\Delta V_{IC}}{\Delta V_{IO}} = 10^4 \qquad \text{(11-168-2}$$

This means that a change of the common-mode input voltage of 1 V causes a change in the input offset voltage of 100 µV.

Inverting op amps do not suffer from common-mode rejection ration effects when the amplifier inputs are permanently at ground for dual supply applications or half the supply voltage in single supply applications. The non-inverting amplifier configuration has a common-mode voltage equal to the input signal.

Supply Voltage Rejection Ratio (k_{SVR})

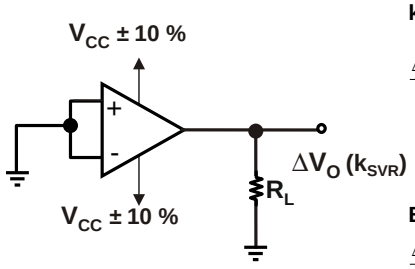

$$k_{SVR} = 20 \times \log \frac{\Delta V_{CC\pm}}{\Delta V_{IO}}$$

$$\frac{\Delta V_{CC\pm}}{\Delta V_{IO}} = \frac{1}{10^{\frac{k_{SVR}}{20}}}$$

Example : TLC4501 with a typical K_{SVR} of 100 dB

$$\frac{\Delta V_{CC\pm}}{\Delta V_{IO}} = \frac{1}{10^{\frac{100}{20}}} = 10\,\mu V/V$$

The supply voltage rejection ratio is the absolute value of the ratio of the change in supply voltage to the change in input offset voltage.



1-169

Supply Voltage Rejection Ratio

The supply voltage rejection ratio k_{SVR} of an op amp indicates how a change in the supply voltage influences the input offset voltage V_{IO}. The change in the supply voltage may be caused by poor supply voltage regulation or bad supply voltage filtering. The parameter k_{SVR} is usually given in dB and we can say:

$$k_{SVR} = 20 \times \log \frac{\Delta V_{CC\pm}}{\Delta V_{IO}} \qquad (11\text{-}169\text{-}1$$

Rearranging this equation, we get:

$$\frac{\Delta V_{IO}}{\Delta V_{CC\pm}} = \frac{1}{10^{\frac{k_{SVR}}{20}}} \qquad (11\text{-}169\text{-}2$$

The results for a TLV2262A with a k_{SVR} of typically 100 dB is given below:

$$\frac{\Delta V_{IO}}{\Delta V_{DD\pm}} = \frac{1}{10^{\frac{100}{20}}} = 10\,\frac{\mu V}{V} \qquad (11\text{-}169\text{-}3$$

In a battery powered system with a supply voltage of V_{DD} = 3 V, it is possible that the supply voltage may vary up to ± 10 %. This results into a supply voltage range from 2.7 V up to 3.3 V. With a supply voltage rejection ratio of 100 dB, the change in the input offset voltage is 3 µV.

Total DC Error Noninverting Amplifier

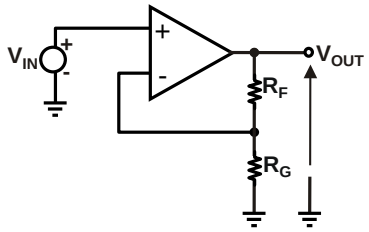

$$V_O = \left(1 + \frac{R_F}{R_G}\right) \times \left[V_{IN} + V_{IO} + \alpha V_{IO} \times \Delta T + I_{IB} \times \left(\frac{R_F}{1 + \frac{R_F}{R_G}} \right) + \frac{V_{IC}}{CMRR} + \frac{\Delta V_{CC}}{k_{SVR}} \right] \times \frac{1}{1 + \frac{1}{A_{VD}} \left(1 + \frac{R_F}{R_G}\right)}$$

Noise and input offset voltage long-term drift are neglected

1-170

Total DC Error Noninverting Amplifier

Equation 11-170-1 summarises all of the DC error sources in an op amp:

$$V_O = \left(1 + \frac{R_F}{R_G}\right) \times \left[V_{IN} + V_{IO} + \alpha V_{IO} \times \Delta T + I_{IB} \times \left(\frac{R_F}{1 + \frac{R_F}{R_G}} \right) + \frac{V_{IC}}{CMRR} + \frac{\Delta V_{CC}}{k_{SVR}} \right] \times \frac{1}{1 + \frac{1}{A_{VD}} \left(1 + \frac{R_F}{R_G}\right)} \quad (11\text{-}170\text{-}1)$$

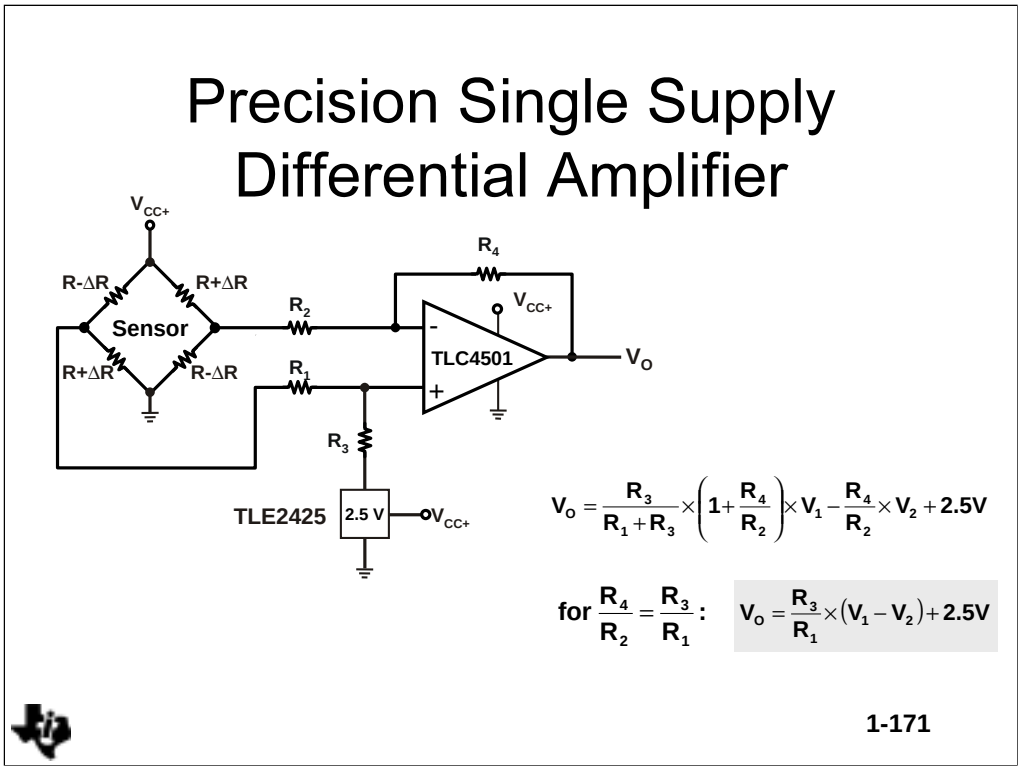

Precision Single Supply Differential Amplifier

This is the classic differential amplifier (subtractor) in a single supply environment, and it is the simplest way to measure and amplify the potential difference across a Wheatstone Bridge.

This amplifier uses the non-inverting and inverting inputs of the op amp. The op amp is dc-biased with half the supply voltage at the non-inverting input to enable single supply operation which allows a maximum symmetrical voltage swing at the output. The "TLE2425 Virtual Ground Generator" is the ideal device because it generates exactly the reference voltage VREF = 2.5 V from a voltage in the range of 4 - 40 V. The voltage at the output of the op amp is calculated as follows:

$$V_O = \frac{R_3}{R_1+R_3} \times (1+\frac{R_4}{R_2}) \times V_1 - \frac{R_4}{R_2} \times V_2 + V_{REF} \quad (11\text{-}171\text{-}1$$

When the resistors are chosen as shown below:

$$\frac{R_4}{R_2} = \frac{R_3}{R_1} \quad (11\text{-}171\text{-}2$$

an easy practical result is obtained:

$$V_O = \frac{R_3}{R_1} \times (V_1 - V_2) + V_{REF} \quad (11\text{-}171\text{-}3$$

since for an input voltage of V_1=V_2, the output of the op amp delivers theoretically exactly the middle voltage V_O = 2.5 V.

The disadvantages of this circuit are that its input impedance is unbalanced and the common mode rejection is modified by the source impedances. This circuit is therefore not recommended for high impedance sources.

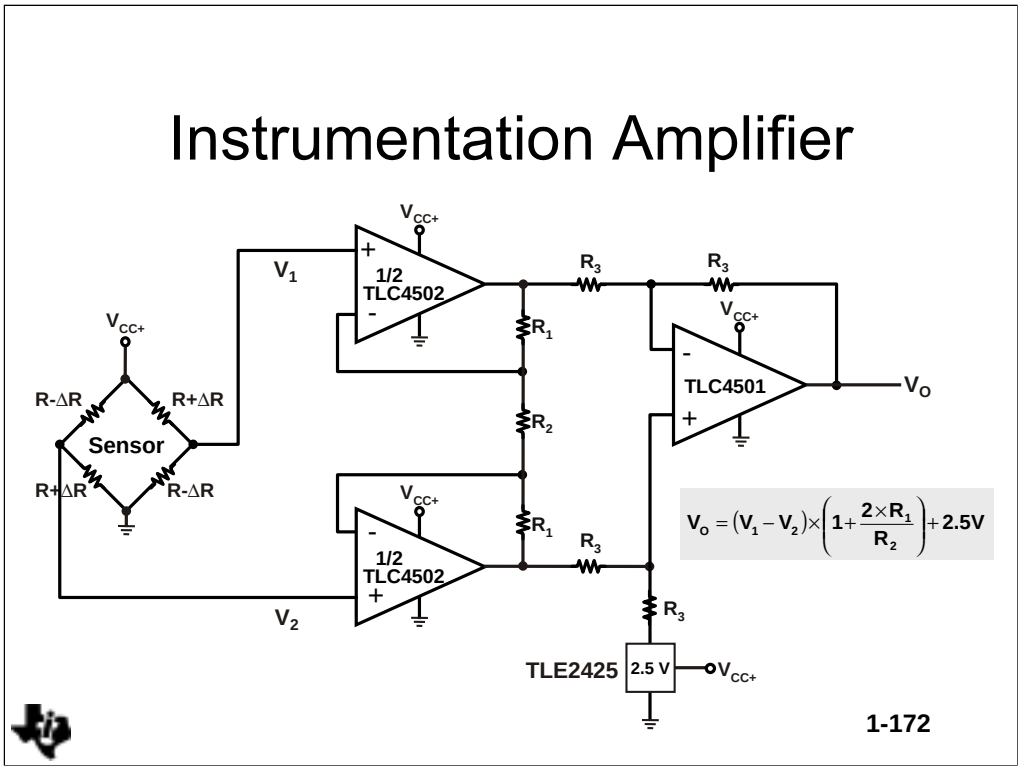

Instrumentation Amplifier

A very high input impedance can be achieved by using an instrumentation amplifier. Such an amplifier consists of three op amps. The differential amplifier discussed before can be found again with a gain of 1, because all resistors are the same. Two further op amps are connected in the front of this differential amplifier to provide the very high input impedance which is determined by the op amp input impedance. The signal source connected to the instrumentation amplifier is loaded by the high input impedance of the CMOS op amp (TLC4501) which is typically 10^{12} Ω. The gain is adjusted by the resistor R_2. The output voltage can be calculated as follows:

$$V_O = (V_2 - V_1) \times (1 + \frac{2 \times R_1}{R_2}) + V_{REF} \quad (11\text{-}172)$$

It is very important to select the resistors with high accuracy relative to each other to achieve high common mode rejection. This can be achieved with a resistor array network where the relative accuracy is very good (value in the region of 10 kΩ). The absolute accuracy of the resistors is not as important.

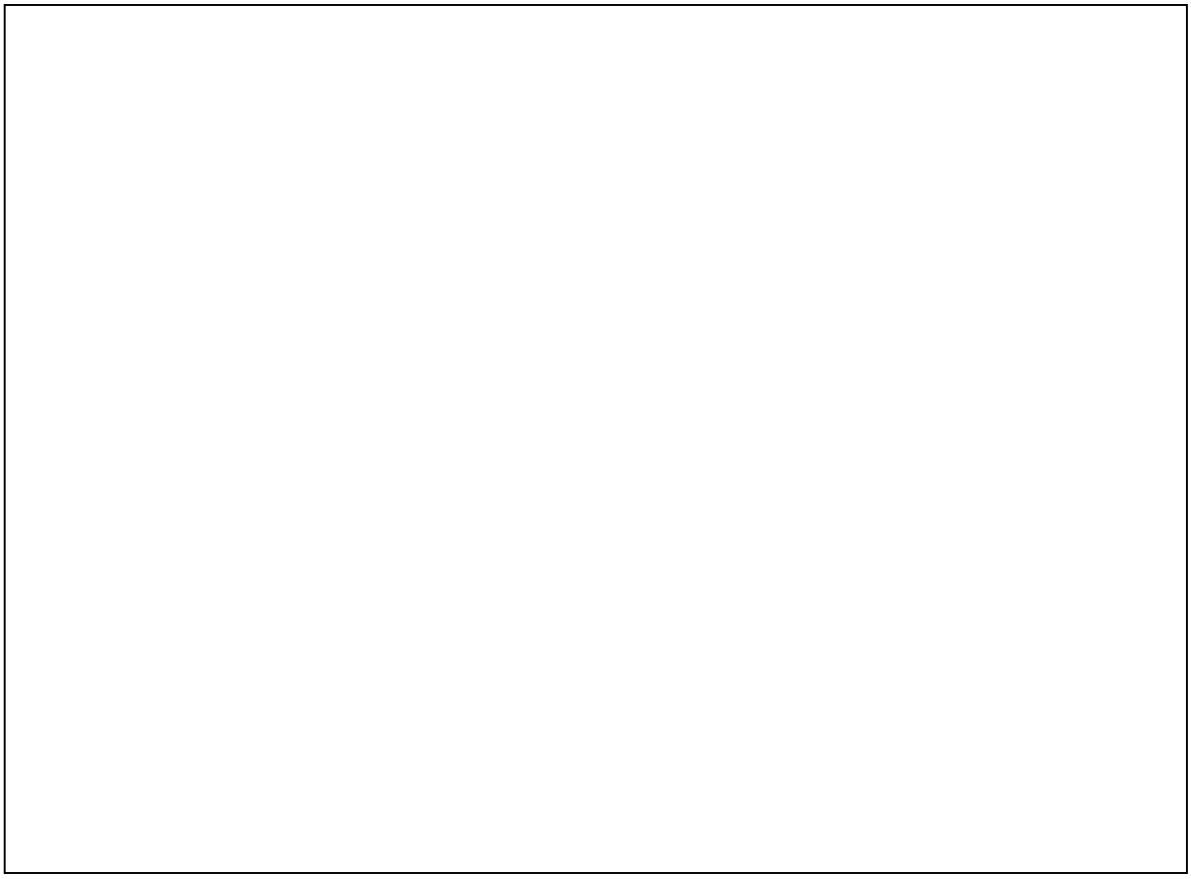

Single Supply Op Amp Applications



Single Supply Op Amp Operation

- **Amplifier analysis in previous section assumed no input or output voltage boundaries**
- **Amplifiers require two power pins:**
  - **Dual Supply (+5V , -5V)**
  - **Single Supply (+5V , Ground)**
- **Bias voltage (virtual ground) can be required for single supply systems**



1-175

This section will focus on single supply operational amplifier applications. We will look at several simple circuits. The object is to look at some actual issue regarding circuit design and biasing.

The previous sections on amplifier analysis did not take into consideration any input or output boundaries. The following circuits will illustrate the need to consider power supply values when designing an Op Amp circuit.

First we need to make clear the definition of single supply operation. When an amplifier operates between a single voltage and ground it is called single supply operation. The same amplifier operated between positive and negative supply voltages is called dual supply operation.

When an amplifier is used in the single supply mode a bias or reference voltage is often required. This bias voltage is also called a virtual ground.

Dual Supply Amplifier Circuit

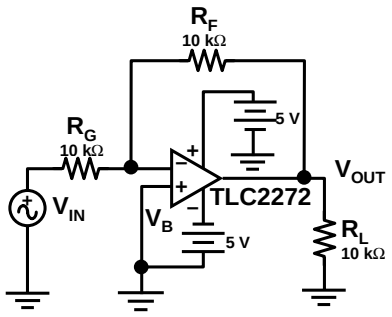

Operating conditions:

V_{IN}= 4 V peak-to-peak
(+2V to -2V)
Power supply +5V, -5V

Inverting amplifier gain equation:

$$\frac{V_{OUT}}{V_{IN}} = -\frac{R_F}{R_G}$$

$$\frac{V_{OUT}}{V_{IN}} = \frac{10k\Omega}{10k\Omega} = -1$$

1-176

The circuit above is operated in a dual voltage mode (+5V and -5V) with proper biasing (Both V_{IN} and V_{OUT} referenced to ground).

Using the differential amplifier formula:

$$V_{OUT} = V_B\left(\frac{R2}{R2+R1}\right)\left(\frac{R_F+R_G}{R_G}\right) - V_{IN}\frac{R_F}{R_G}$$

For this circuit we do not have the divider network R2 ,R1 and V_B=0 so the first term becomes 0 and the formula becomes:

$$V_{OUT} = -V_{IN}\frac{R_F}{R_G} = -V_{IN}\frac{10k\Omega}{10k\Omega}$$

$$V_{OUT} = -V_{IN}$$

Now consider the operating conditions. The output voltage must be within the limits of +5V and -5V. For this circuit V_{IN} is 4V peak to peak (+2V to -2V).

Dual Supply Amplifier Circuit Performance

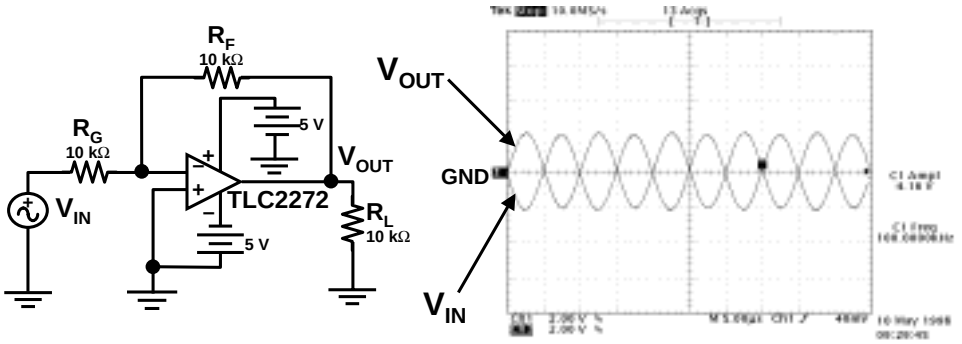

For V_{IN}= 2V , V_{OUT} = -2V

For V_{IN}= -2V , V_{OUT} = 2V

1-177

This is the same circuit with an oscilloscope trace of the input and output signals. V_{IN} varies between +2V and -2V and since V_{OUT}=-1V_{IN} then V_{OUT} varies between -2V and +2V well within the operating conditions.

Single Supply Amplifier

Improper Signal Biasing #1

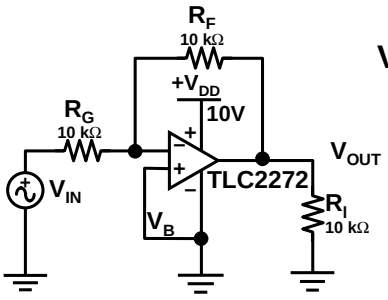

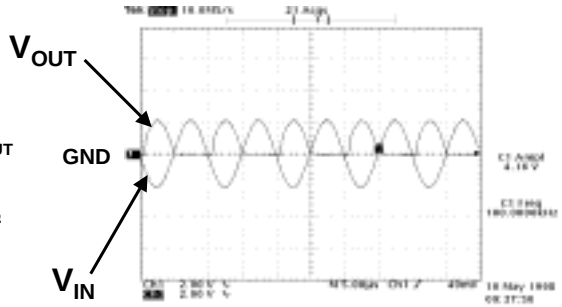

- **Same Amplifier circuit powered by +10V and Ground.**
- **The input waveform, V_{IN} and R_L referenced to GND**
- **V_{IN} = 4.0V_{p-p} @ 100kHz**
- **V_{OUT} is a half-wave signal**
  V_{IN} = -2V , V_{OUT} = 2V
  V_{IN} = 2V , V_{OUT} = Ground

1-178

Now consider the same amplifier modified to operate in the single supply mode. The supply voltages are now +10V and ground. And the non-inverting amplifier input V_B is still at 0V. The total voltage across the amplifier is still 10V. However now the output is restricted to +10V and ground (0V). This circuit has the same input signal as the previous example (+2V and -2V) and the same gain (-1). This circuit cannot work properly since the output voltage is now restricted to +10 and 0V. The result is an output (VOUT) that can only from 0V to +2V. The negative portion of the output is clipped at 0V.

This circuit is incorrectly biased.

Single Supply Amplifier

Improper Signal Biasing #1

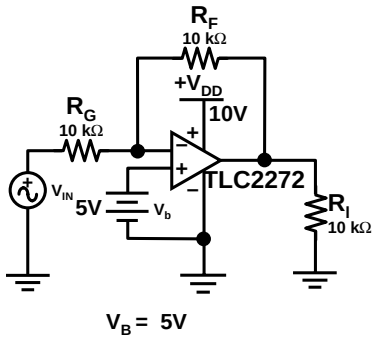

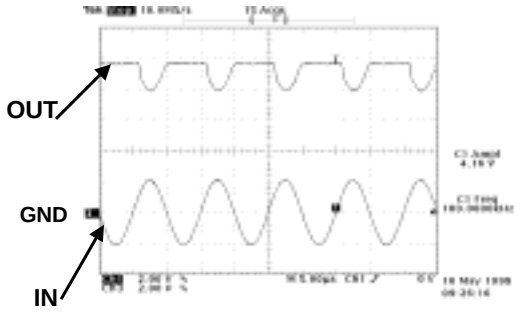

V_B = 5V

$$V_{OUT} = V_B\left(\frac{R_F + R_G}{R_G}\right) - V_{IN}\left(\frac{R_F}{R_G}\right)$$

$$V_{OUT} = 5V(1 + 1) - V_{IN}(1)$$

$$V_{OUT} = 10V - V_{IN}$$

V_{IN}	V_{OUT}
0V	10V
+2V	8V
-2V	10V

1-179

This is the same circuit again with a change on the bias voltage V_B. This circuit has V_B=5V. The formula for a differential amplifier is:

$$V_{OUT} = V_B\left(\frac{R2}{R2 + R1}\right)\left(\frac{R_F + R_G}{R_G}\right) - V_{IN}\frac{R_F}{R_G}$$

Remember from the previous example the R1, R2 divider equals 1. Unlike the previous example VB is now 5V.

Therefore:
$$V_{OUT} = V_B(1)\left(\frac{R_F + R_G}{R_G}\right) - V_{IN}\frac{R_F}{R_G}$$

$$V_{OUT} = V_B(1)\left(\frac{10k\Omega + 10k\Omega}{10k\Omega}\right) - V_{IN}\frac{10k\Omega}{10k\Omega}$$

$$V_{OUT} = 2V_B - V_{IN}$$

$$V_{OUT} = 10V - V_{IN}$$

Now look at the operation with a +2V and -2V input signal. Again we have an incorrectly biased circuit.

Single Supply Amplifier

Proper Signal Biasing

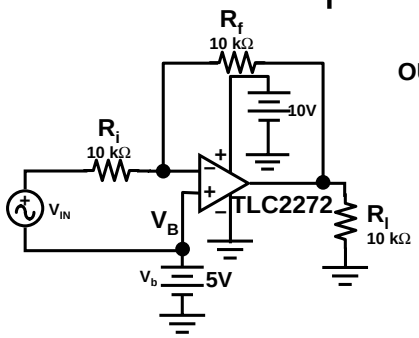

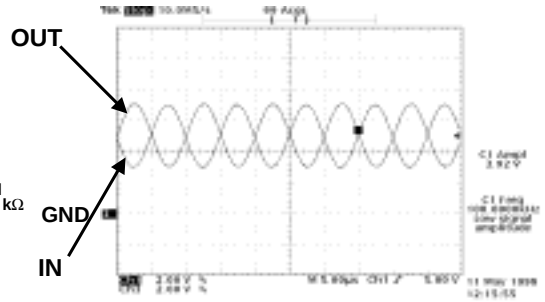

- **Bias voltage is applied to V_{IN}, R_L, & non-Inverting input.**
- **Input and output waveforms swing freely about V_B**

$$V_{IN} = V_{SIG} + V_B$$

$$V_{OUT} = V_B\left(\frac{R_F + R_G}{R_G}\right) - V_{IN}\left(\frac{R_F}{R_G}\right) = V_B\left(\frac{20k}{10k}\right) - V_{IN}\left(\frac{10k}{10k}\right)$$

$$V_{OUT} = 2V_B - (V_{SIG} + V_B)(1) = V_B - V_{SIG}$$

1-180

This example shows the correct way to bias an inverting amplifier circuit. V_B is applied to both the amplifier non inverting input and to the input signal.

$$V_{IN} = V_{SIG} + V_B$$

$$V_{OUT} = V_B\left(\frac{R_F + R_G}{R_G}\right) - V_{IN}\left(\frac{R_F}{R_G}\right) = V_B\left(\frac{20\,k\Omega}{10\,k\Omega}\right) - V_{IN}\left(\frac{10\,k\Omega}{10\,k\Omega}\right)$$

$$V_{OUT} = 2V_B - (V_{SIG} + V_B)(1) = V_B - V_{SIG}$$

Examination of the output signal show the following:

V_{SIG}	V_{OUT}
-2V	7V
0V	5V
+2V	3V

The output is a 4V peak-to-peak signal centered around V_B (5V)

Proper signal biasing for a single supply amplifier (#2)

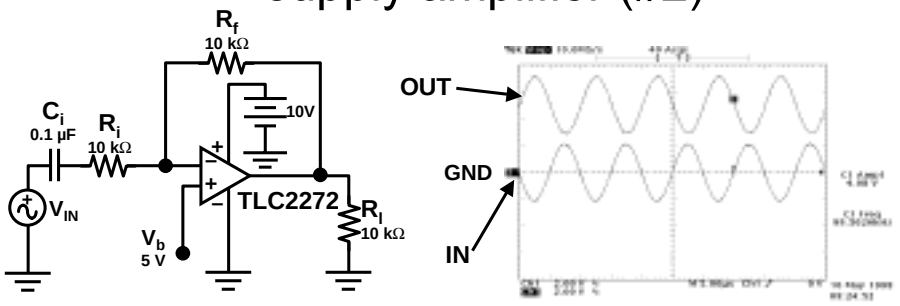

- Capacitor (C_i) blocks the flow of dc current
- Output is an inverted version of the input referenced to VB
- $V_o = V_B\left(\frac{R_f}{\frac{1}{sCi}+R_i}+1\right) - V_i\left(\frac{R_f}{\frac{1}{sCi}+R_i}\right)$
- Capacitor makes the system frequency dependent
- Low frequency cutoff point; $f = 1/2\pi C_i R_i$ (f = 159Hz)

1-181

The previous examples were for DC coupled circuits. A DC coupled circuit amplifies both the AC and DC components of the input signal. The circuit above is an AC coupled circuit. C1 isolates the input signal and allows the circuit to be properly biased while having the input signal referenced to ground instead of V_B as in the DC coupled circuit.

The disadvantage of AC coupling is the zero in the gain equation causing this to be a low pass filter with a breakpoint of 159Hz.

Op Amp Load Considerations

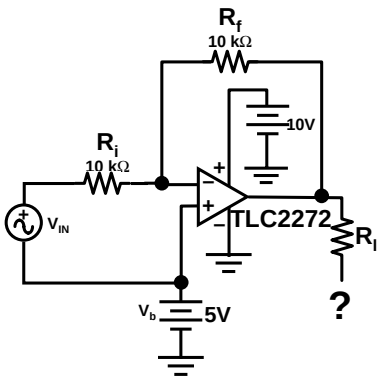

Example 1

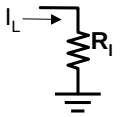

Advantages:
Simple circuit
No bias required on load
Disadvantage:
When V_{IN}=0 V_{OUT}=5V and $I_L = 5/R_L$

Example 2

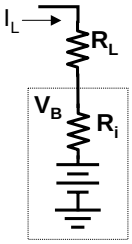

Advantages:
When V_{IN}=0 I_L=0
Disadvantage:
I_L flows through V_B causing errors due to internal resistance of V_B

1-182

The last topic for this section is load considerations. First you must consider that any current flowing through the load must come from the power supplies. Next as in the previous cases you must consider bias voltages on the load resistor.

Example 1 shows R_l referenced to ground. In this example with a single supply amplifier, V_{OUT} equals V_B when V_{IN} is 0V. The result is current flowing in the load resistor when no input signal is present.

Example 2 shows R_L biased to V_B. Now V_{OUT} equals V_B when V_{IN} is 0V and the voltage across R_L is 0V. The result is no current flows when no input voltage is applied. The disadvantage is that the load current flows through V_B. The example show the actual model for a battery or power supply. Notice that the model includes an internal resistance. Remember from the analysis earlier current flowing through the internal resistance will result in a voltage drop and can possibly cause errors if other portions of the circuit use the same bias voltage V_B.

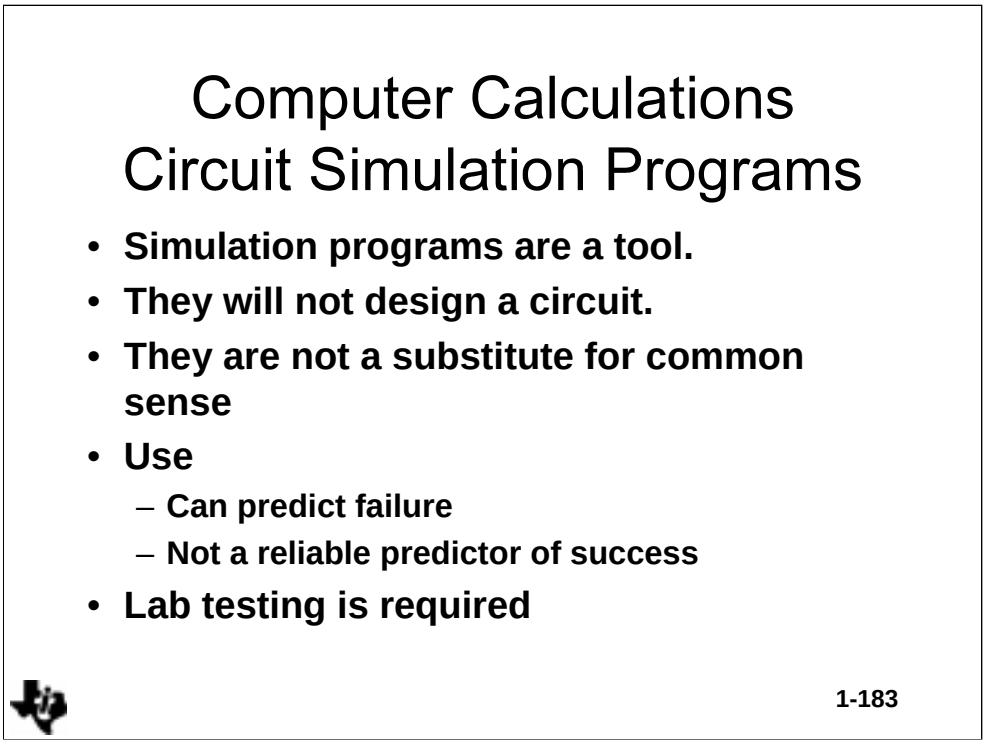

Analog circuit simulation programs are a tool that can aid in evaluating a circuit design. When used wisely these tools can help in the design process. Just remember that the program will not design a circuit for you.

These programs perform a mathematical analysis of the circuit based on models and the information you supply. The accuracy of any such calculations depends on the models used , the accuracy and the amount of information supplied. Simple descriptions which ignore many of the frequency related factors and intrinsic errors yield simplistic answers.

Also just remember if you cannot get the circuit to work on the simulation it probably won't work on the actual circuit, however if it works on the simulator it may or may not work on the actual circuit.

Summary

- Biasing is important especially in single supply amplifier circuits.
- Always consider the power supply limitations when evaluating circuit performance
- Both Ohm and Murphy can give you problems if you aren't careful.



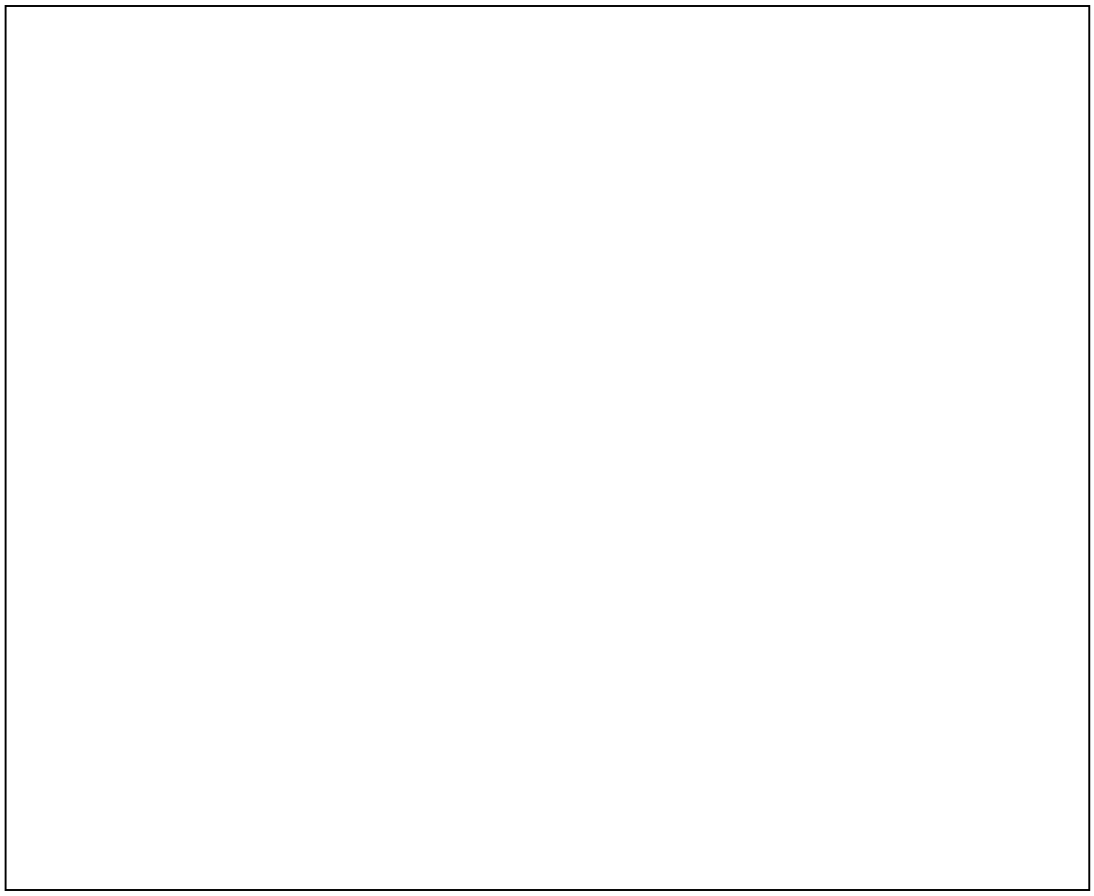

Circuit High Speed Amplifier Applications



High Speed Amplifier Applications

- Voltage Feedback and Current Feedback Amplifier Performance.
- Where Are They Used?
- High Speed Data Converter System.



Voltage Feedback Amplifiers

- **High impedance differential input stage (i.e. no current flow at input)**
- **Bandwidth a function of closed loop gain - GBWP**
- **Internal slew rate limitations**
- **VF amps are the easiest to use**
  - **Traditional design techniques**

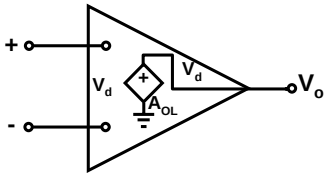

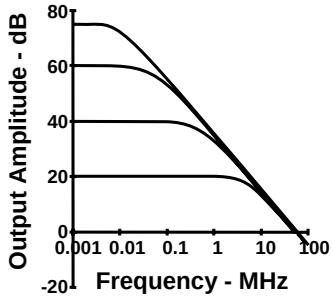

1-188

First, let's talk about the classic voltage feedback amplifier. The voltage feedback amplifier (VFB) has a high impedance input stage. The amplifier first looks at the difference in voltage (V_d) at the inverting and non-inverting terminals. The output then multiplies the difference (V_c) by the open loop gain (A_{OL}). With negative feedback from the output to the inverting node, we get a closed loop amplifier.

One of the main characteristics of a VFB amplifier is the bandwidth is indirectly related to the gain. As the gain is increased, the bandwidth is divided by the gain. This is known as Gain Bandwidth Product - or GBWP.

For example, if we look at the graph on the lower right corner, it shows a -3dB bandwidth of about 100 MHz at a gain of one. If we set the gain to 40 dB , or 100, then the bandwidth is divided by 100, or 100Mhz / 100 = 1 MHz.

As stated previously, the VFB amplifier does have internal slew rate limitations based on it's architecture. Because of this, VFB amps are generally used in lower bandwidth systems. And because it has high input impedances, the VFB amplifier is extremely easy to use. Making an integrator or a simple buffer is no problem with a VFB op-amp. This is because the op-amp does not rely on the current flowing into or out of the input stage.

Current Feedback Amplifiers

- **Much higher slew rates**
- **Unity Gain Buffer Input Stage**
  - **+ input has high impedance**
  - **- has low impedance (i.e. current flow)**
- **Internal transimpedance stage**
- **Much higher slew rates**
- **Bandwidth 'independent' of gain**
- **Harder to use**
  - ***Must* have feedback resistor**
  - ***NO* capacitor in feedback path**

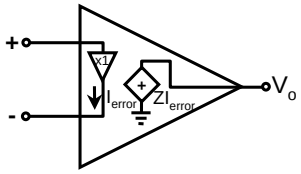

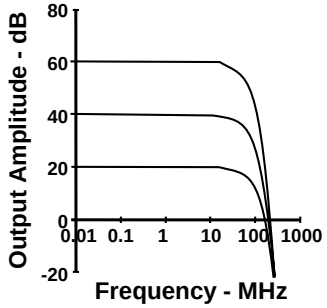

1-189

The first thing you will notice is that the input stage is quite different. The non-inverting input has a high input impedance, just like the VFB amplifier. But, the inverting stage is low impedance, typically less than 20 ohms. This means that current **will** flow into this pin. The output will then multiply the error current (I_{error}) by the open loop transimpedance (Z). With a feedback resistor placed between the output and the inverting pin, we form a closed loop system.

The first thing you will notice is that the feedback resistor limits the amount of current flow into or out of the inverting pin. And because bandwidth is determined by the amount of current available to charge the internal compensation capacitor, the feedback resistance plays the key role in determining the bandwidth of the system. Typically, as the feedback resistor is increased, the bandwidth will be decreased.

Additionally, the slew rate will also be affected by this same concept. To find out exactly what the feedback current will be, we get the following equation :

$$I_{FEEDBACK} = (V_{OUT} - V_{INVERTING\ NODE}) / R_{FEEDBACK}$$

Remember that the slew rate is determined by the current available to charge the internal dominant pole capacitor. Thus, the slew rate is determined by the output swing and the feedback current into the inverting node.

The last key feature of this system can be seen in the frequency response graph of a typical current feedback amplifier. There is not a gain bandwidth product like there is in a VFB amplifier. Thus, once you get an acceptable response out of a CFB amplifier, you simple need to change the gain resistor to change the overall system amplification, not the feedback resistor. Again, the feedback resistor controls the response of the CFB amplifier.

As stated before, the drawback to the CFB amplifier is the fact that it can be harder to use. But, careful planning will make this amplifier as easy to use as the VFB amplifier. So, if you need an extremely high slew rate, gain independent, high bandwidth amplifier, the CFB amplifier makes a logical choice.

Typical Performance of High Speed Op Amps

TYPE	VFB	CFB
PN	THS4001	THS3001
Bandwidth (MHz)	300	420
Slew Rate (V/µs)	400	6500
Settling time (ns)	30	40
IO (mA)	100	100
THD (dBc@1MHz)	-72	-96
Diff Gain Error (%)	0.04	0.01
Diff Phase Error (%)	0.15	0.02



1-191

The chart shows performance of two actual high speed amplifiers. The difference in performance between a current feedback and voltage feedback amplifiers can be seen especially in the bandwidth and slew rate specifications. Some of these specifications have not previously been mentioned. Slew rate is the rate at which the output can change when a square wave is applied to the input. Both differential gain and differential phase errors are terms associated with video and describe the amplifiers performance with signals of different amplitudes.

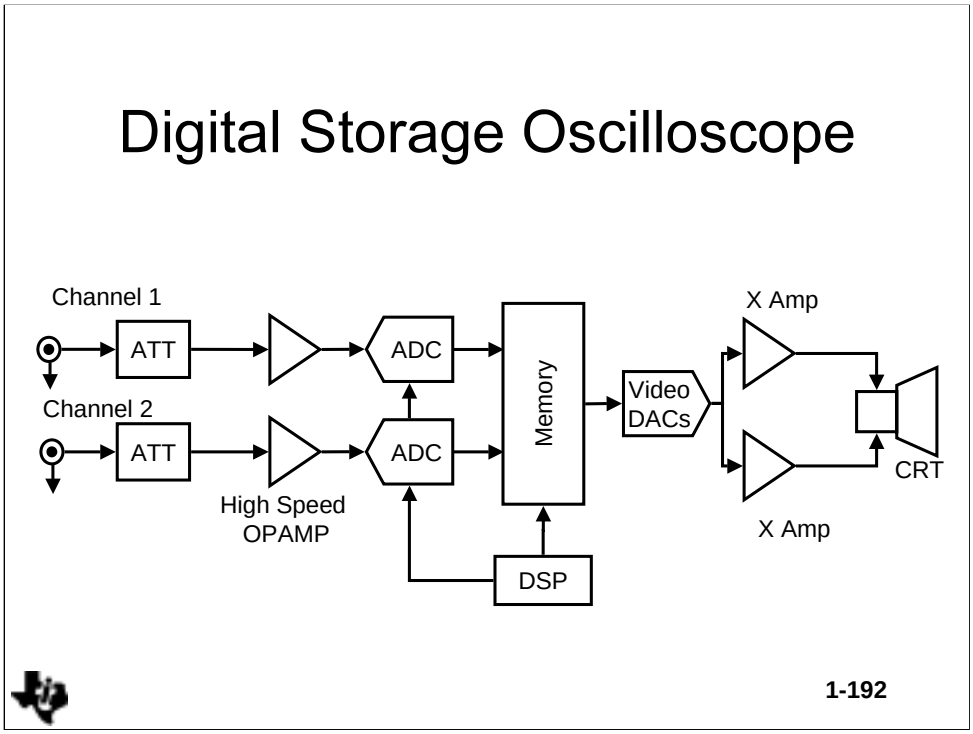

High speed op amps are used in numerous applications. The example above is a digital oscilloscope. High speed op amps are used input signal conditioning on each channel prior to being fed into ADCs. Some of the things which would be important in this application are; high bandwidth, high input impedance, high output drive and a circuit design which would have accurate gain and closely match the performance of both channels.

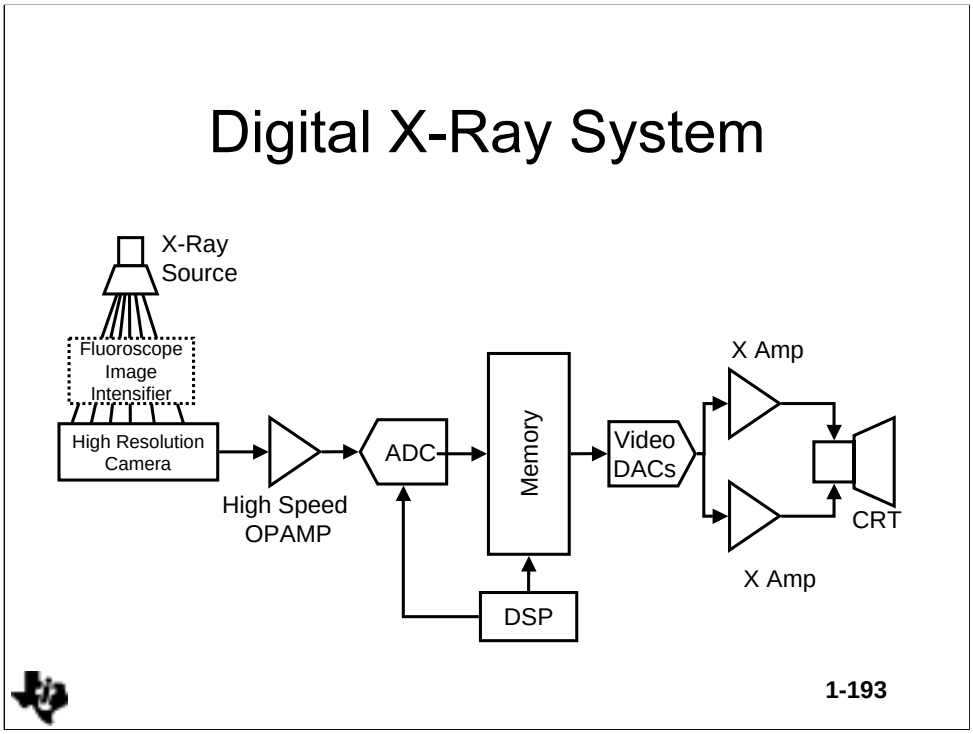

Another application using video is a Digital X-Ray System. This is real time system so the data from the camera occurs at a video rate. The important things are similar to the previous circuit: high bandwidth, high input impedance, high output drive. These circuits would require low differential and phase errors since imaging/video is involved.

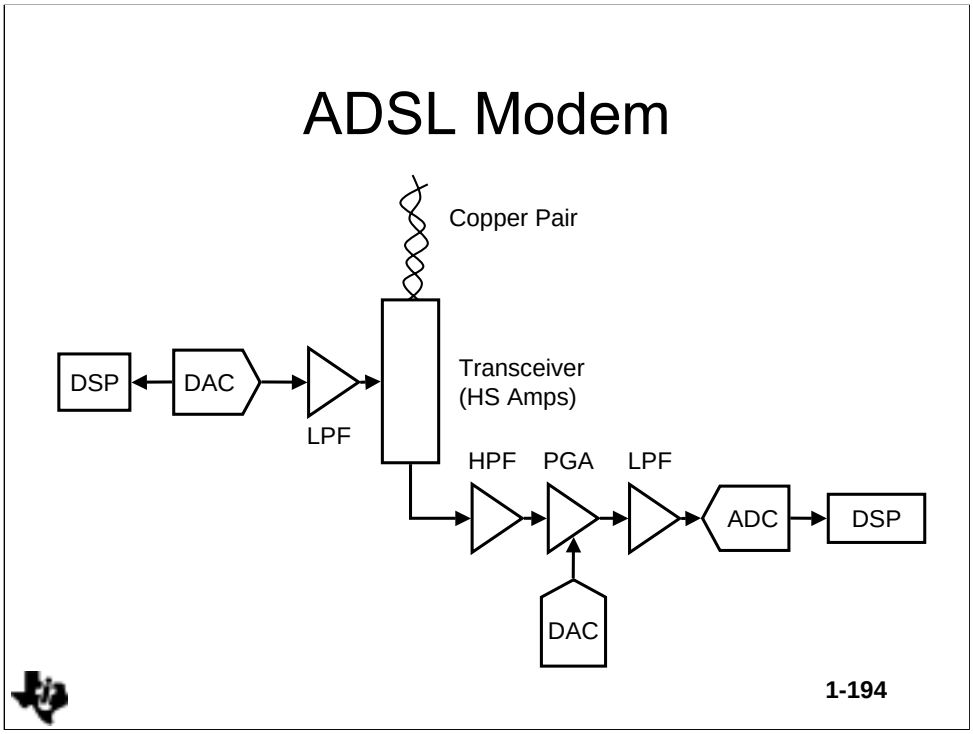

This circuit is a high speed ADSL modem. The ADSL modem operates over conventional copper telephone wiring using special equipment at both the telephone company central office and at the user's residence. The system sends digital data over the line containing both voice and data information. Data rates are much higher than those accomplished with conventional modems.

This system would use high speed amplifiers in the high pass filter (HPF), low pass filters (LPF), and programmable gain amplifier. The block labeled transceiver is also a set of specialized high speed amplifiers.

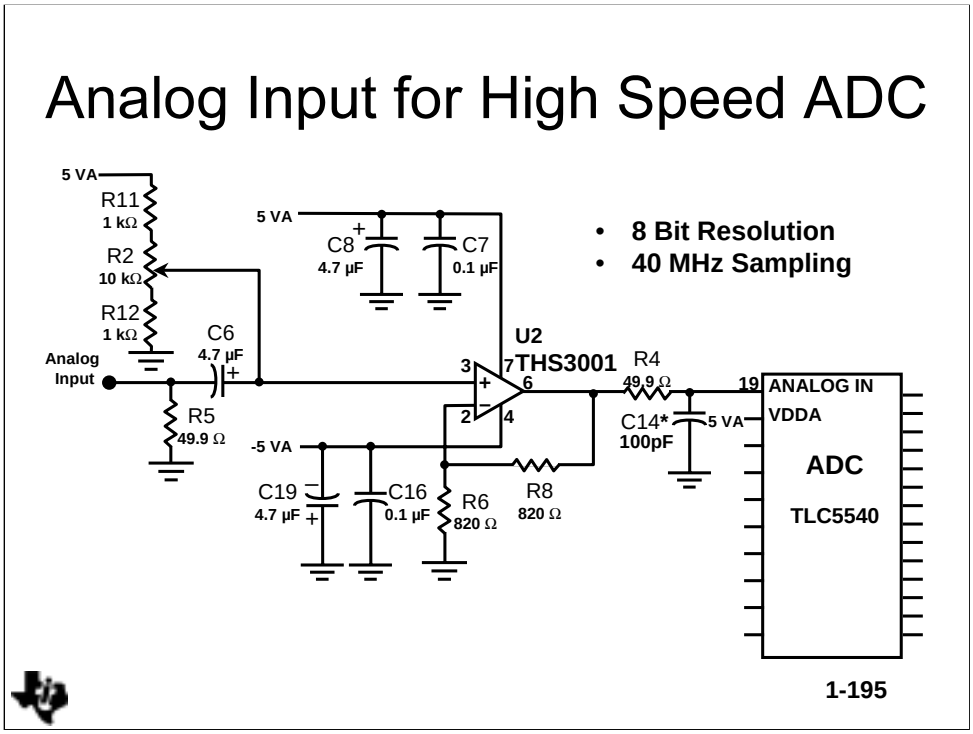

Here you can see the front-end of an analog - to - digital converter (ADC). This particular converter requires a single supply and thus the input signal must also be uni-polar. To create this, the amplifier is DC shifted to the mid-rail, creating a virtual ground to the ADC input. A signal is then AC coupled into the amplifier. The DC bias and AC input signal are amplified by two. To help eliminate any glitches, a simple low pass filter is placed between the amplifier and the ADC. This also helps in isolating the capacitive load. The 49.9 ohm resistor (R4) is used for stability.

Notice that even though the amplifier is high speed the circuit topology is similar to many other circuits. The difference would be in the actual printed circuit design which wold require special layout considerations.

Summary

- High speed amplifiers are used in numerous applications.
- Although the circuit diagrams are similar the physical circuit layout is very critical when using HS amplifiers.



Converter Basics



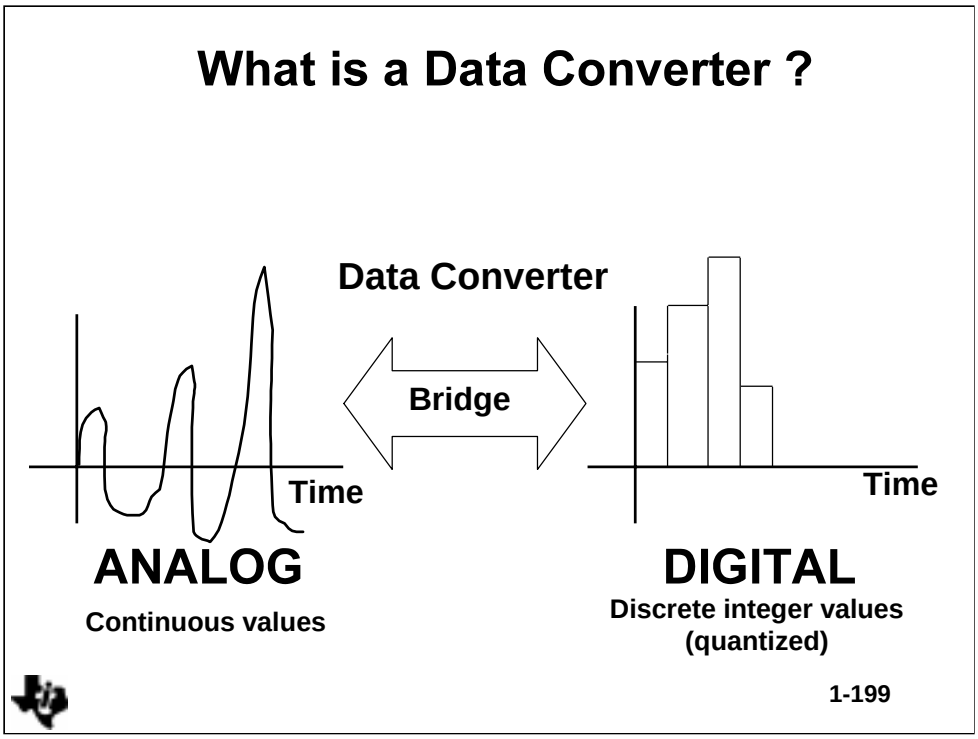

What is a Data Converter

Data converters serve as the bridge between the analog and digital worlds. Data converters provide the electrical conversion between analog signals and digital signals.

What is analog, what is digital? Maybe this is a little fundamental, but it is kind of a mind set. Analog signals are continuous. Analog things are continuous, something that happens over a continuous function. There are no discontinuities in it. Digital is discreet, quantized things. We deal with both of those every day. We merely quantize things. You don't realize it, but you are quantizing things. An example is, how many of you stepped on the scale in your bathroom this morning? No? As you get older, you'll do that. You step on the scale, it has a dial on it, not digital numbers. Mine says, looks like about 190 pounds. It was 196, but I said 190. I quantize that to a nice even value that I am comfortable with. If I quantize it to 200, I have to go on a diet, so I use a 4 bit quantization to make sure I'm happy with quantizing. We do it all the time.

Basic DAC Theory

- A Digital number is loaded into converter.
- Logic circuitry controls switches.
- Switches select from one or more analog reference voltages or currents.
- Resulting analog signal is output.



1-200

The basic operation of a DAC is similar to that of the ADC. A digital number, representing an analog sample is loaded into the DAC input. The digital number is input to logic circuitry which controls a set of analog switches. The analog switches now select from a set of reference voltages or currents. The results of the selection represent the number with an analog output. The analog signal is now buffered and in some ADCs applied to a sample and hold.

The use of a sample and hold prevents transients in the analog output due to the switches changing state as a result of loading a new number into the input. The input digital number is normally loaded into a register.

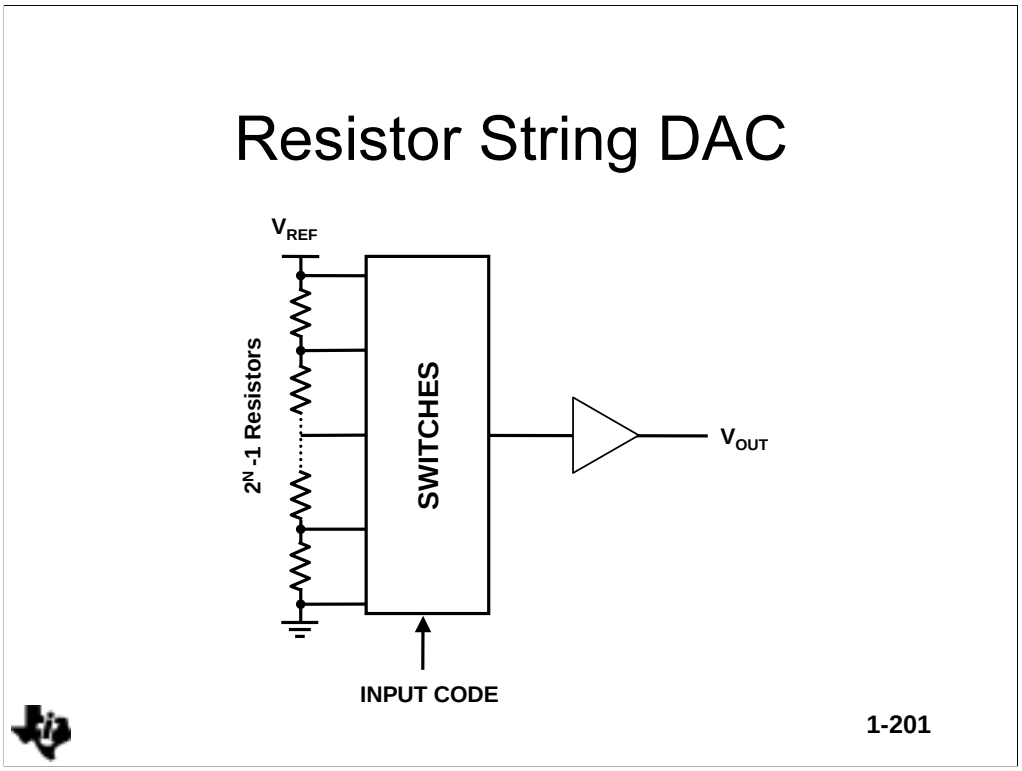

In a Resistor String architecture, the reference voltage is divided into 2N - 1 parts, each exactly one LSB high. A network of switches selects the output voltage from the resistor string, depending on the digital input code. To avoid errors due to a load current, a buffer is required on the DAC output. This buffer is usually part of the DAC. The big advantages of this architecture are, that the transfer function is always monotonic and that the design is relatively simple. The disadvantages are, that 2N - 1 matching resistors are required, which limit the achievable resolution and that this architecture needs an amplifier (buffer), which limits the achievable speed.

Other architectures use different methods such as selecting a binary weighted divider which effectively sums currents to achieve the selected values for the final result.

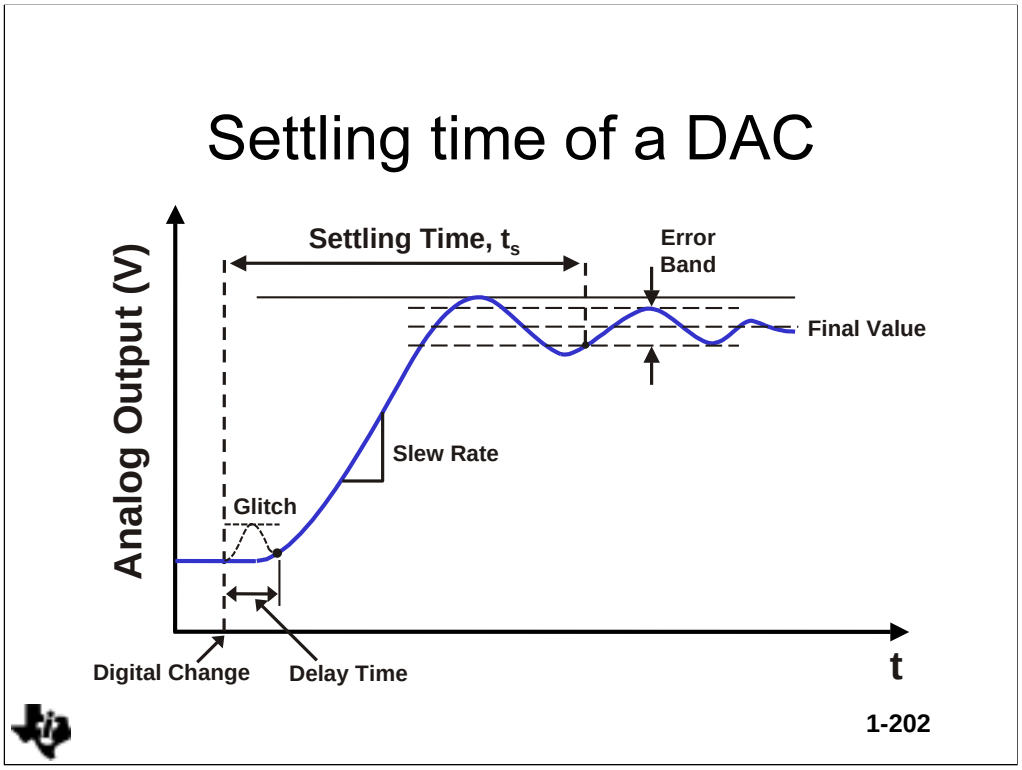

Settling Time of a D/A Converter

The settling time of a D/A-converter is the time between the switching of the digital inputs of the converter and the time when the output reaches its final value and remains within a specified error band. The settling time is a very important parameter, because this must be faster than the signal frequency in order to be able to reconstruct the waveform. The picture shows also a possible glitch in the waveform of a DAC. This glitch is an undesirable transient in the analog output occurring following a code change at the digital input. If a current output DAC is used with an external amplifier, then a ferrite bead can be used to minimize the glitch by minimizing the switching current.

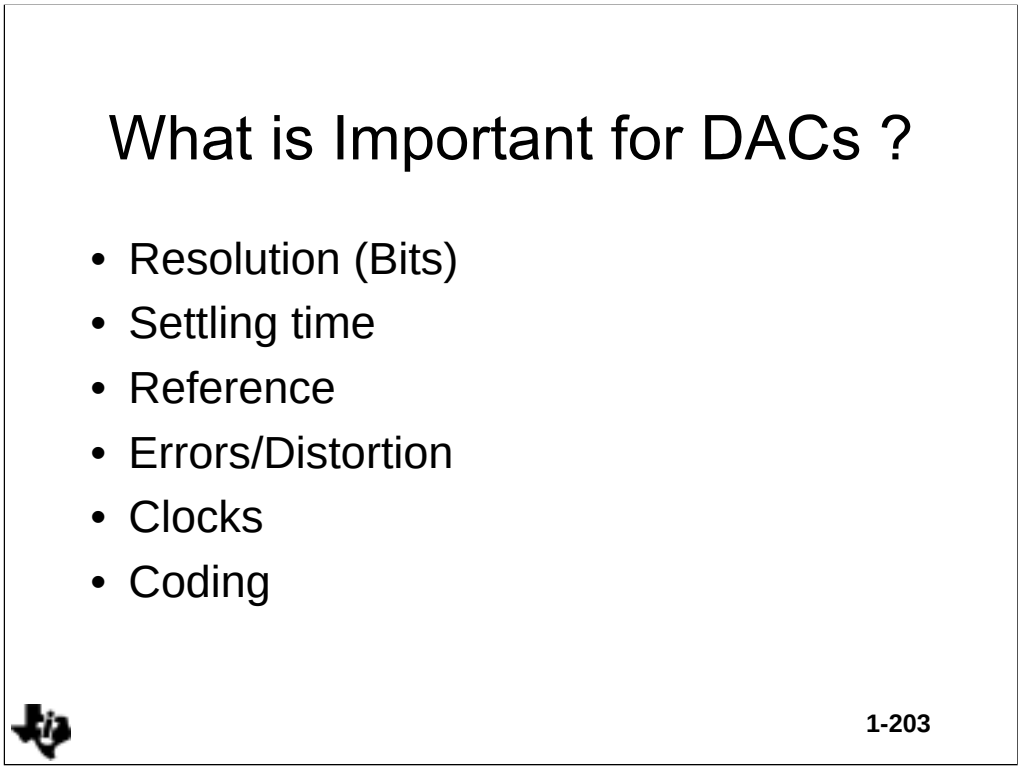

The important considerations for a DAC are resolution, settling time, reference and errors. Resolution for a DAC like that of the ADC determines the maximum SNR achievable. Settling time is the equivalent of conversion rate. Settling time determines which analog signal frequencies can be reproduced. The reference voltage impacts accuracy and stability. Errors/distortion determine how accurately waveforms can be reproduced and are covered in the next pages.

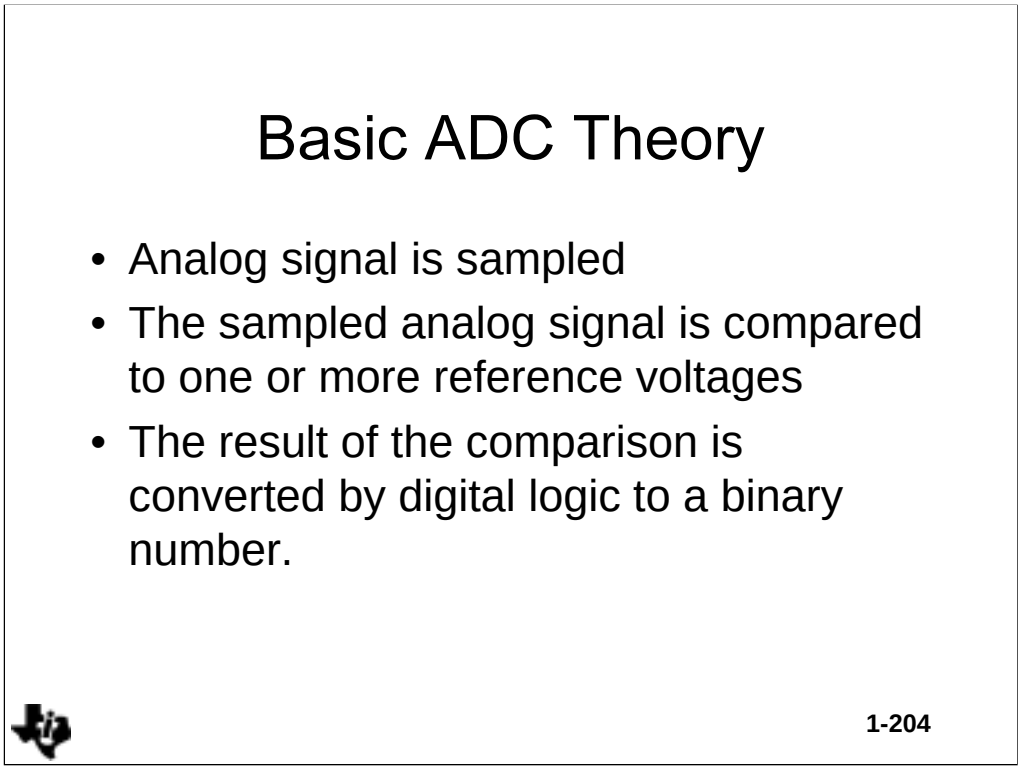

Basic ADC Theory

The basic ADC converts an analog signal digital by first sampling the signal. Second the sample is compared to a set of reference voltages. The result of the comparison is then converted by logic circuitry to a binary number. The binary number is the converter output.

Several different system architectures are used to implement ADCs. They differ in how the signal is compared to the reference and how the output is configured.

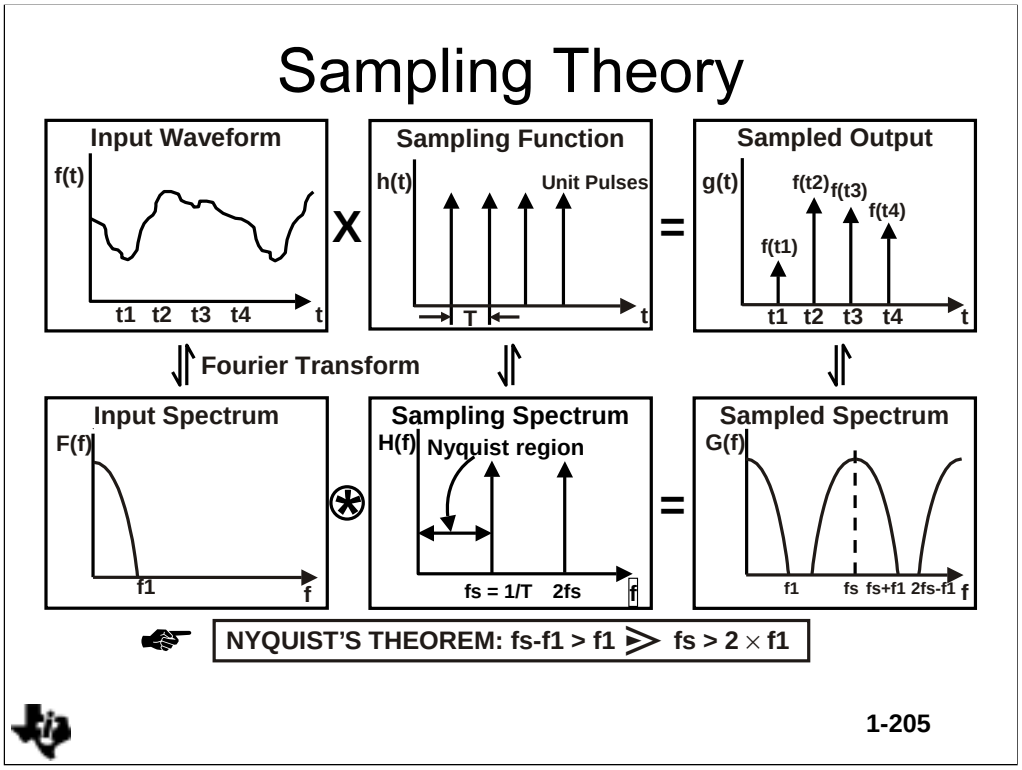

Sampling Theory Overview

In order to produce a discrete digital representation of a continuously varying analog signal, it is necessary to take samples of the signal at regular intervals and convert them from analog into digital. In an ideal situation the sampling function is a train of impulses, each of which is infinitesimally narrow and has unit area. The frequency of these pulses is the sampling rate (fs). The input signal can also be idealized by considering it to be truly band limited, containing no components in its spectrum above a certain frequency.

The ideal sampling condition, represented in both the frequency and time domains, is shown in the figure above. The effect of sampling in the time domain is to produce amplitude modulated train of impulses representing the value of the input signal at the instant of sampling. In the frequency domain the spectrum of the pulse train is a series of discrete frequencies at multiples of the sampling rate. Sampling convolves the spectrum of the input signal with that of the pulse train to produce the combined spectrum shown, with sidebands around each discrete frequency produced by the amplitude modulation. In effect some of the higher frequencies are “folded back” so that they produce interference at lower ones. This interference causes distortion, which is called aliasing. Aliases cannot be removed by subsequent processing.

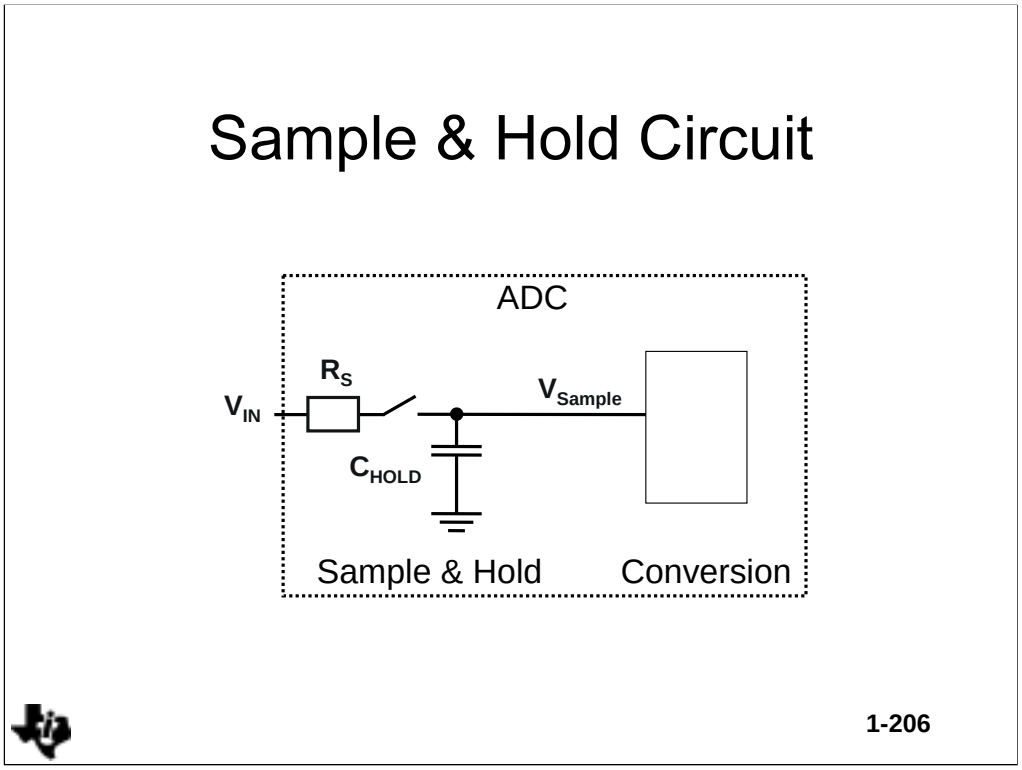

Sample and Hold

The basic sample and hold circuit is a switch and a capacitor. To sample the signal the switch is closed, applying V_{IN} to C_{HOLD}. The switch is opened and the value of VIN is “held” by the charge on C_{HOLD} while the ADC performs the analog to digital conversion.

The purpose of the sample and hold is to take a “sample” of the analog input signal and “hold” the value while a conversion takes place. This is particularly important for ADCs which take a number of steps to make the conversion. Without the sample and hold errors can occur in the conversion.

If we assume that the input signal is band limited to a frequency f_1 and is sampled at frequency fs it is clear from the figure that the overlap (and hence aliasing) will not occur if

$f_1 < f_s - f_1$

This could also be expressed by: $2f_1 < f_s$

Therefore, if sampling is done at a frequency at least twice as great as the maximum frequency of the input signal, no aliasing will occur and all the signal information can be extracted. This is Nyquist's Sampling Theorem, which provides a basic criterion for the selection of the sampling rate required by the converter to process an input signal of a given bandwidth.

In real sampling, however, the width of each sample is finite and this gives rise to a modulation error of (sin x) / x. This is explained later.

Real world signals are generally not band limited. To avoid errors due to aliasing an anti-aliasing filter is normally used. This filter band limits the signal and minimizes any errors due to aliasing. Anti-aliasing filters can be either external or internal to the data converter.

When designing a system it is necessary to know the input signal characteristics in order to select a sampling rate and filters, if necessary, for minimum conversion errors.

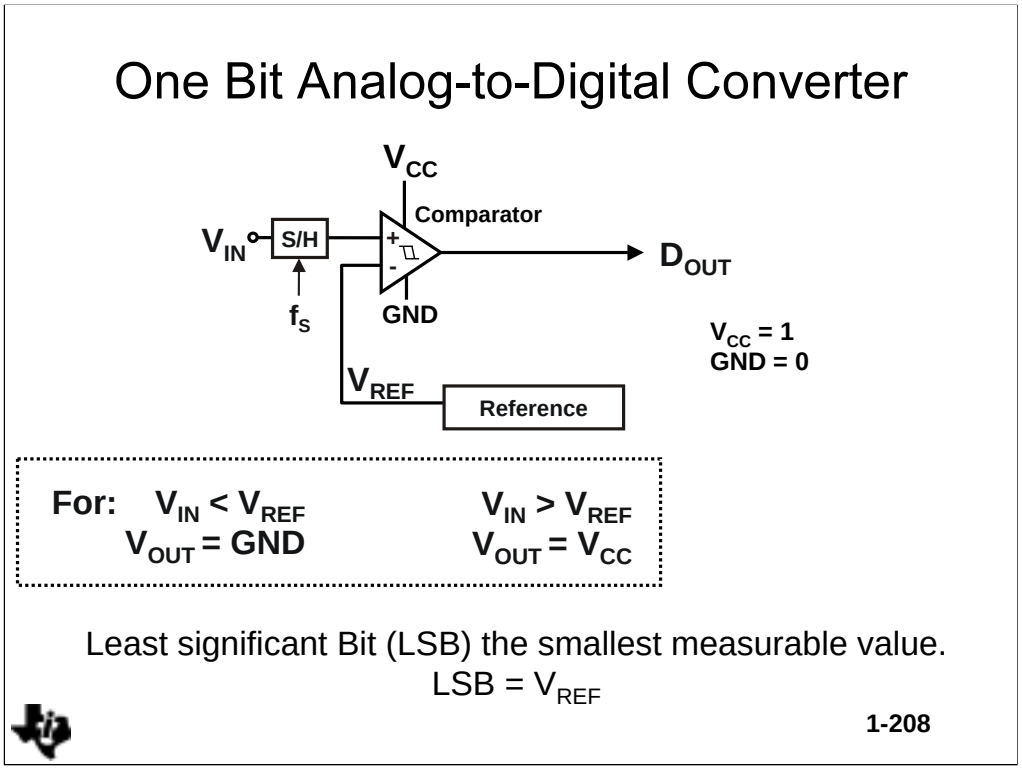

The simplest data converter is a single comparator. The unknown analog voltage V_{IN} is applied to the non-inverting (+) input of a comparator. A reference voltage is applied to the inverting (-) input. If V_{IN} is greater than V_{REF} then the output will go to V_{CC} (Digital 1). If V_{IN} is less than V_{REF} then the output will go to ground (Digital 0).

The least significant bit repersents the smallest analog voltage that can be measured. In this example this would be V_{REF}.

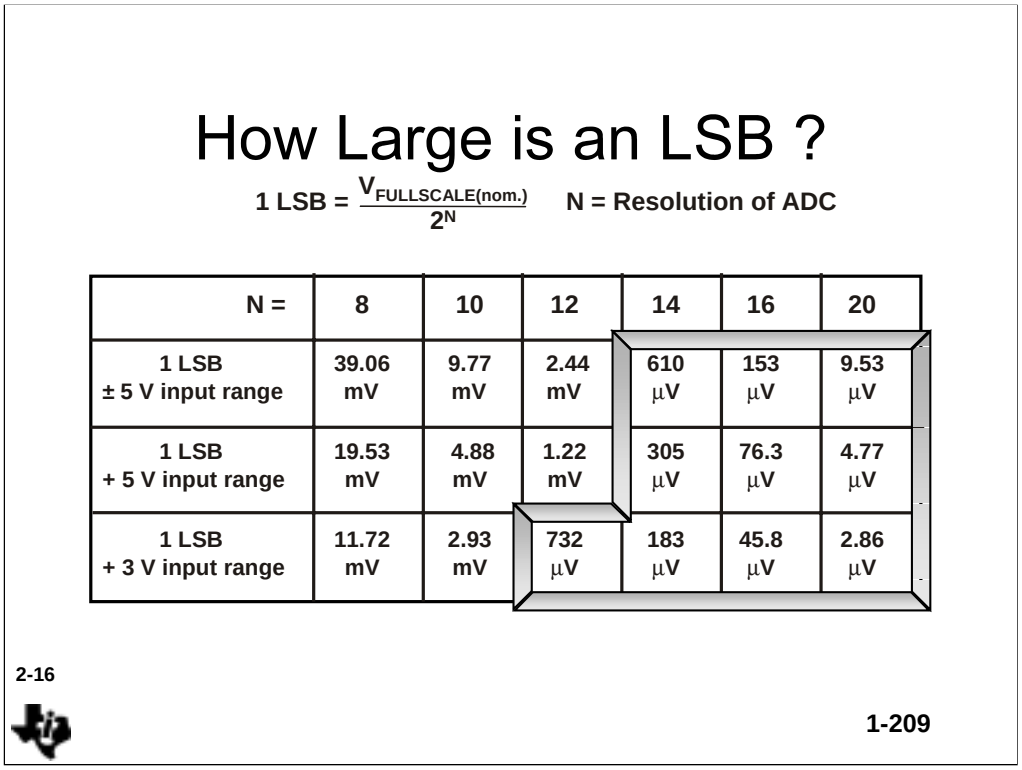

How Large is a LSB ?

A code of an ADC represents a specific voltage magnitude, which is given by $1LSB = \frac{V_{FS(nom)}}{2^N}$

Where N is the resolution of the ADC. The figure shows the magnitude of a LSB for different resolutions and different analog input voltage ranges. It‘s obvious that the LSB is getting very small if the ADC provides a high resolution or the analog input voltage range is small. The figure shows LSB values smaller than 1 mV. Therefore, it is a challenge to keep the error (offset, drift, noise), which is caused by the signal conditioning stage below an LSB of the ADC.

V_{FS} (Practical Full-Scale Range) is the total range of analog values that correspond to the ideal transfer line.

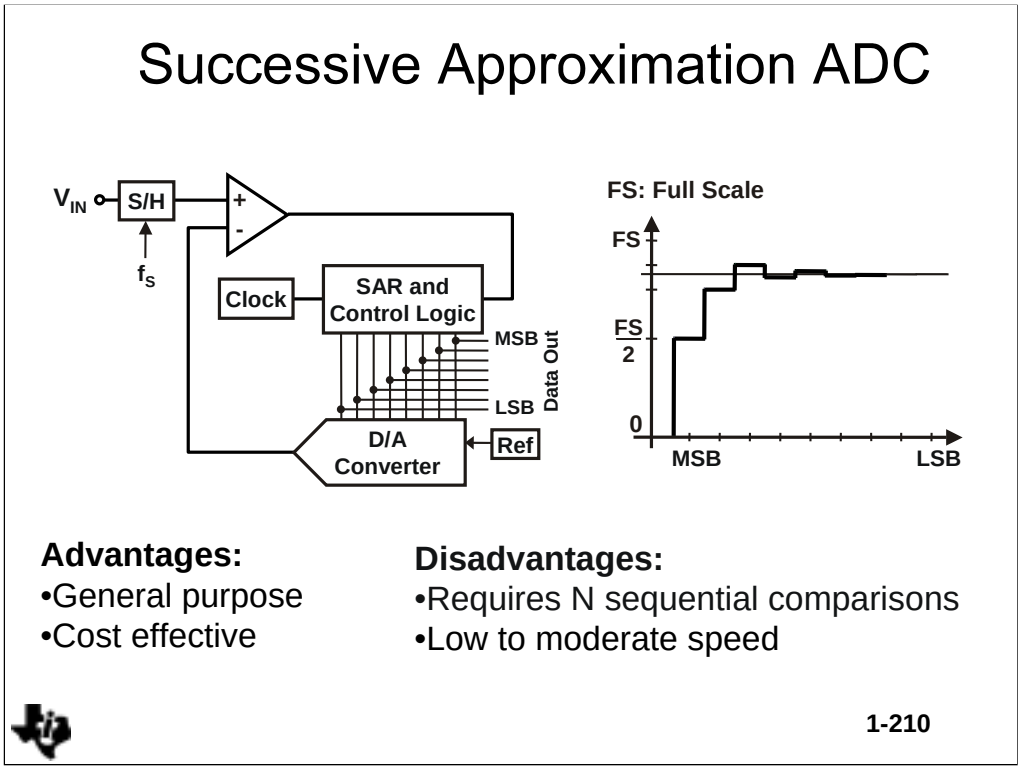

Successive Approximation ADC

Successive approximation is a common technology for A/D converters. A conversion time from 100 μs to below 1 μs and a resolution up to around 16 bits is possible and make this type of ADC still the most popular type of converter.

Successive comparison of an unknown analog input voltage with binary weighted values of a reference give this method its name of “successive approximation”. A converter of N-bit resolution takes “N” steps to achieve a digital output.

V_{IN} is applied via a sample and hold to one input of a comparator, while the output of a DAC drives the other input. The successive-approximation register (SAR) provides the input to the DAC. When the DAC has its MSB set to logic level 1 (with all other bits zero) by the successive-approximation register (SAR), it will produce a voltage output of 1/2 the reference (analog input full-scale range). The comparator then determines if the DAC output is above or below the unknown input signal. If, as shown, the input signal V_{IN} is above the DAC output value, the MSB is retained in the successive-approximation register while the next weight of 1/4 the reference is compared. This process continues until all bits are tested and the nearest approximation to the input signal is obtained.

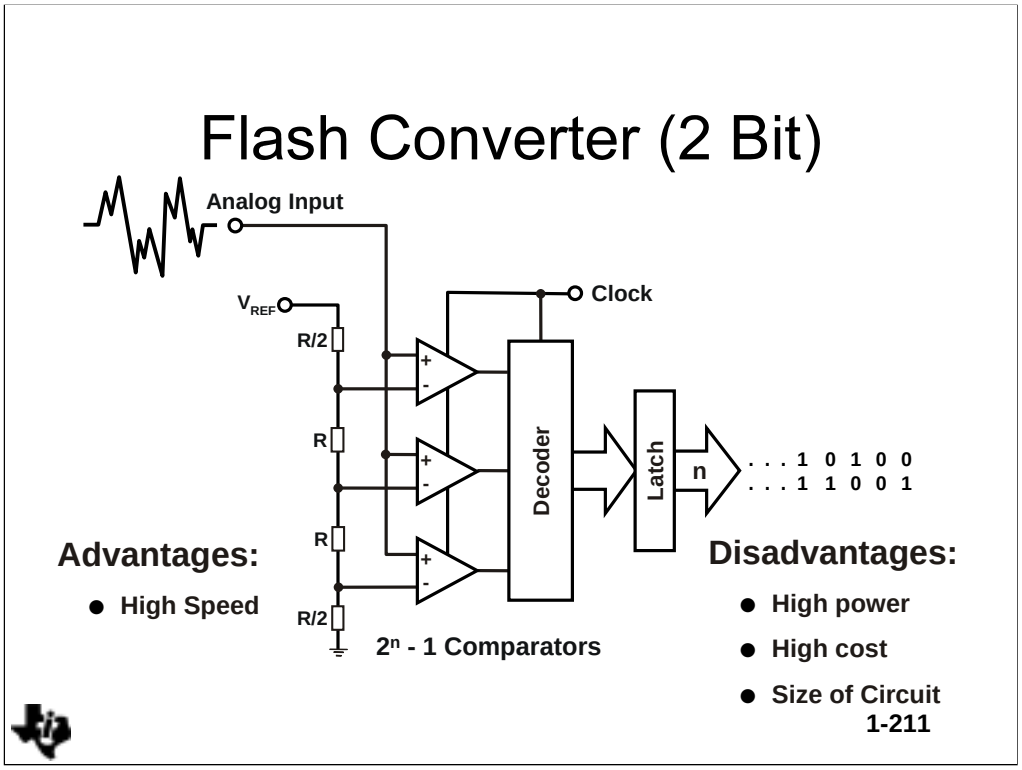

Flash Converter (2 Bit)

The flash analog to digital converter provides the fastest conversion method today. This is achieved by a simultaneous comparison of the analog input signal with 2^n–1 reference voltages. These reference voltages are generated with a voltage divider, which is built by a resistor chain. Each reference voltage is connected to the inverting input of a comparator. Again, for an n-bit resolution, 2^n–1 comparators are required with threshold voltages varying by 1 LSB. The analog input signal is connected to the noninverting input of every comparator. The output is low for every comparator where the analog input signal is smaller than the reference voltage. The output is high for every comparator where the analog input signal is higher than the reference voltage. The decoded digital output data, which is n bits wide, is written into a latch.

As previously mentioned, flash converters have been favored for achieving high sample rates. However, the flash method requires 2^n-1 comparators to implement an n-bit converter. This means that 255 comparators are needed for an 8-bit ADC and 4095 comparators for a 12 bit flash converter. Flash converters therefore occupy a relatively large area of silicon, require a lot of power, have a high input capacitance and are expensive.

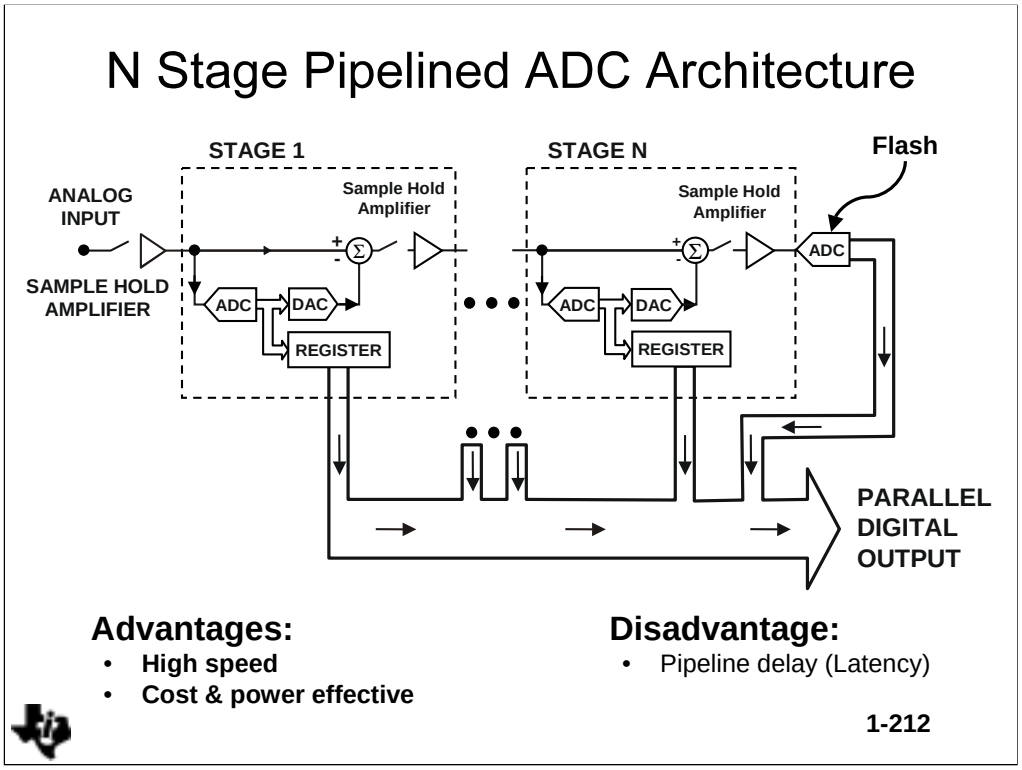

N Stage Pipelined ADC Architecture

Higher sample rates than successive approximation techniques can be achieved cost effectively by using the pipelined architecture. The functional block diagram of this conversion method is shown in the picture. It consists of a number of individual n-bit resolution (typically n = 2 or 4) converter stages which are cascaded to form the complete converter. Each stage comprises of an n-bit ADC, an n-bit DAC, a sample/hold amplifier and a data register. The sample/hold should be N bits accurate where N is the resolution of the overall ADC.

The ADC operates as follows. The analog input signal is sampled and held. The first stage produces the first n MSBs of the overall ADC conversion result. This n-bit result is then reconverted back into analog form via the n-bit DAC and is subtracted from the held input signal level. The result of this subtraction is then sampled and held. The next stage then repeats the process performed by the previous stage and this in turn is repeated for subsequent stages. The instant that the result of the subtraction of stage 1 is successfully held, the preceding sample/hold amplifier acquires the next sample of the input signal. This allows the individual n-bit conversions to occur serially in time. Thus the throughput rate of the overall ADC is increased significantly. In addition, the chip area is significantly reduced from that which would be needed with a full Flash architecture.

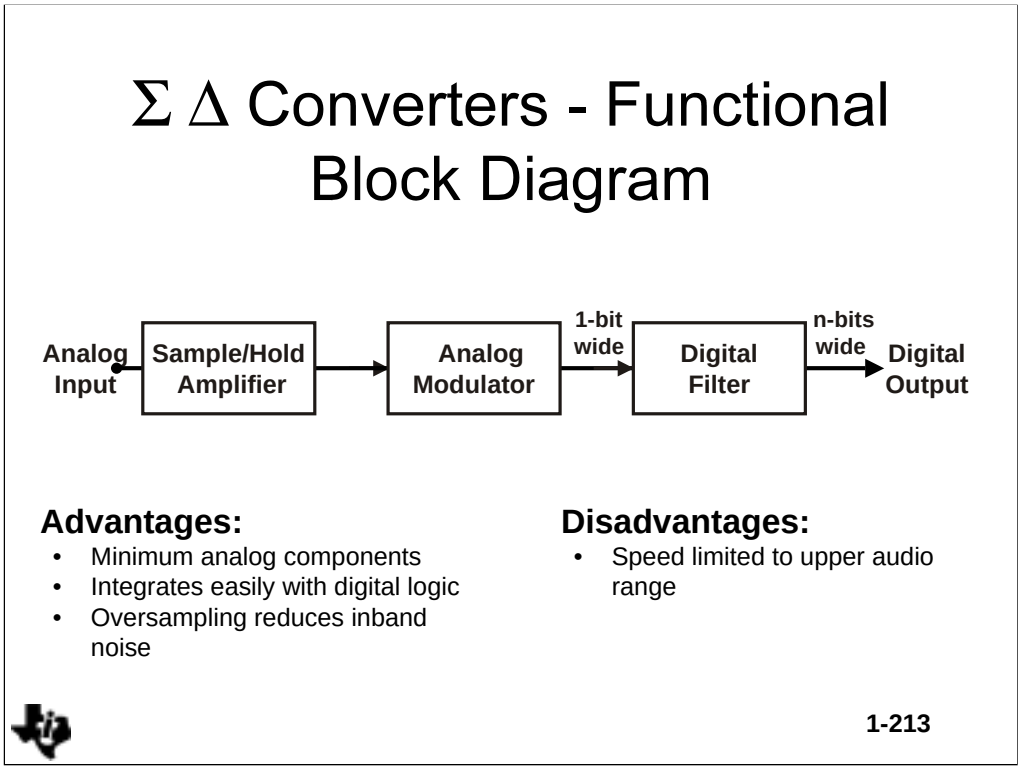

Sigma-Delta Converters – Functional Block Diagram

The simplified structure of a Sigma-Delta ADC is shown in the figure above and comprises an analog modulator and a digital filter. The analog modulator, running at a high sampling rate, converts the input signal at its output to a 1-bit pulse density modulated bit stream. The digital filter takes this bit stream and simultaneously removes out of band noise and reduces the bit rate while increasing the output word width.

To increase resolution the analog modulator not only oversamples the input signal but also shapes the quantization noise so it appears in the unwanted band to be removed by the digital filter.

The one bit quantization in the analog modulator provides low differential non-linearity and hence no missing codes in the output. The high input sampling rate means only a non-critical anti-aliasing filter is required and a sample and hold is not required.

The resolution of a Sigma-Delta converter is determined from its output signal to noise ratio.

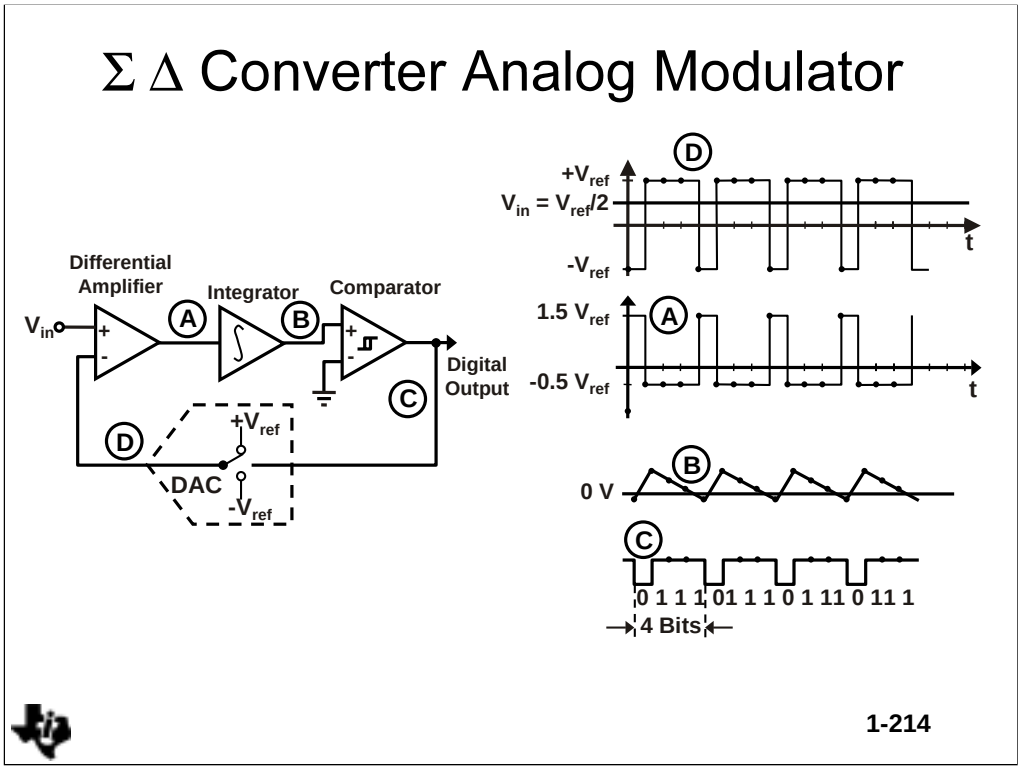

1st Order Modulator

The analog modulator performs the actual analog to digital conversion process. In its simplest form this consists of a differential amplifier, single integrator, comparator and 1-bit DAC connected in a closed loop configuration as shown in the figure above which illustrates a 1st Order modulator. The analog modulator converts the analog input signal into a 1-bit wide serial digital output.

The analog input voltage should not exceed the limits of $+V_{ref}$ and $-V_{ref}$. An example of the modulator operation is given for an analog input voltage of $V_{in} = +V_{ref}/2$ and where the starting conditions are: output voltage of the integrator $V_B < 0$ (therefore the output of the comparator is 0), DAC output $V_D = -V_{ref}$. Therefore, the voltage at the output of the differential amplifier is: $V_A = V_{in} – V_D = 1.5\ V_{ref}$. In this situation, the integrator integrates up and as soon as the output voltage of the integrator exceeds 0 V, the output of the comparator switches to 1. Therefore, the DAC output switches from $-V_{ref}$ to $+V_{ref}$ and the output of the differential amplifier becomes: $V_A = V_{in} – V_D = -0.5\ V_{ref}$. The integrator-input voltage is therefore negative and the integrator now integrates down.

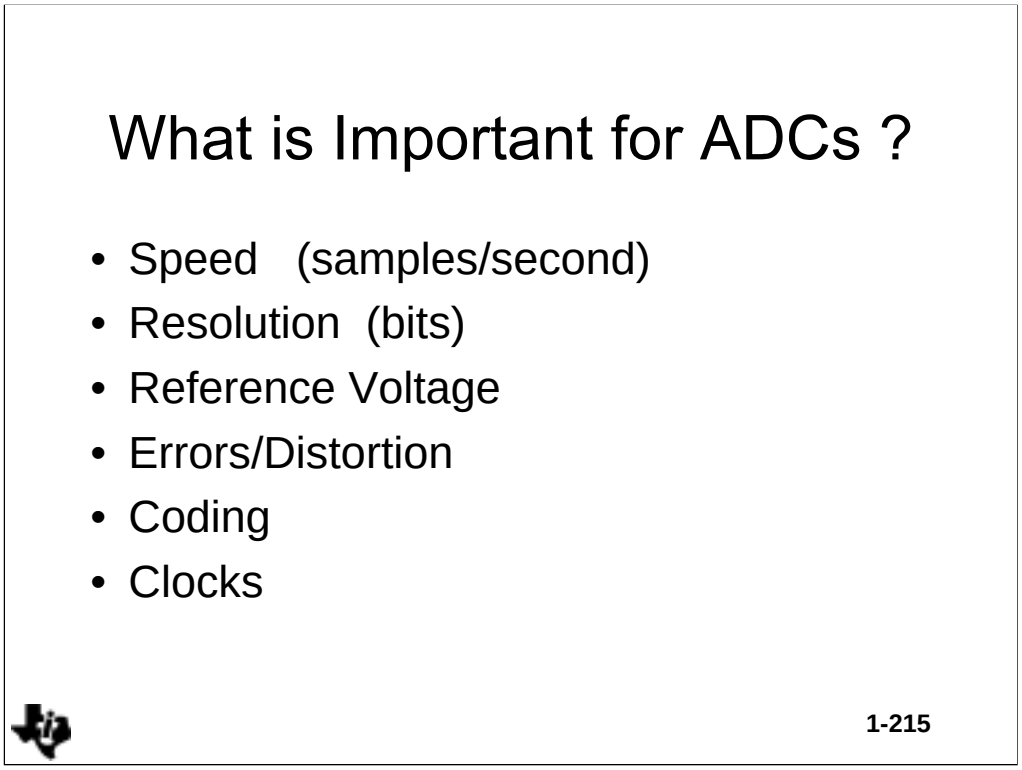

So now what is important when considering ADCs. Speed is important because the converter speed determines what frequency of input signal can be converted. Resolution determine the signal to noise performance which can be achieved and effectively how much information can be retrieved from the analog signal. Although not mentioned specifically we can see that since the converter operates by comparing signals to a reference the converter can only be as accurate and stable as the reference. Accuracy can be important in some applications, however some applications are not dependant on absolute accuracy. Such applications include speech reproduction. The last concerns are grouped together as errors and distortion. These will be detailed later.

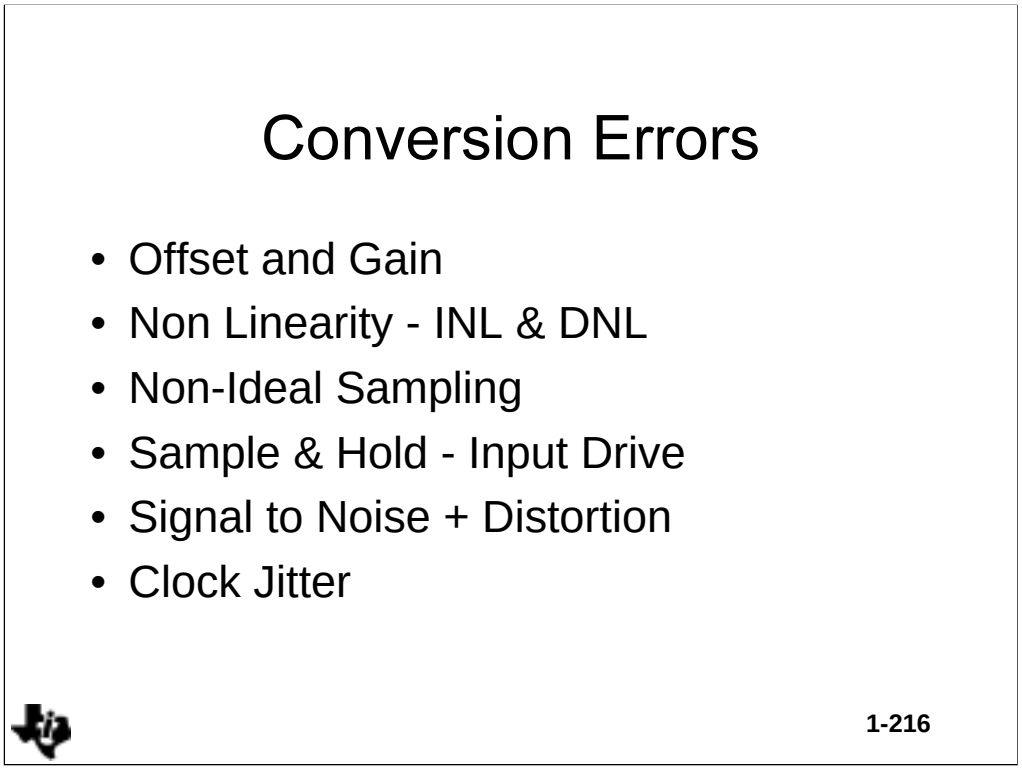

Conversion Errors

The ideal converter does not exist. A real life “in silicon” converter transfer curve is not a straight line, not a series of perfectly even stair steps. These small errors or deviations from the perfect are always present . When designing a system using a data converter an understanding of the types of errors and their resulting impact is important. With an understanding of the nature of the errors and their magnitude systems can be designed to perform as required.

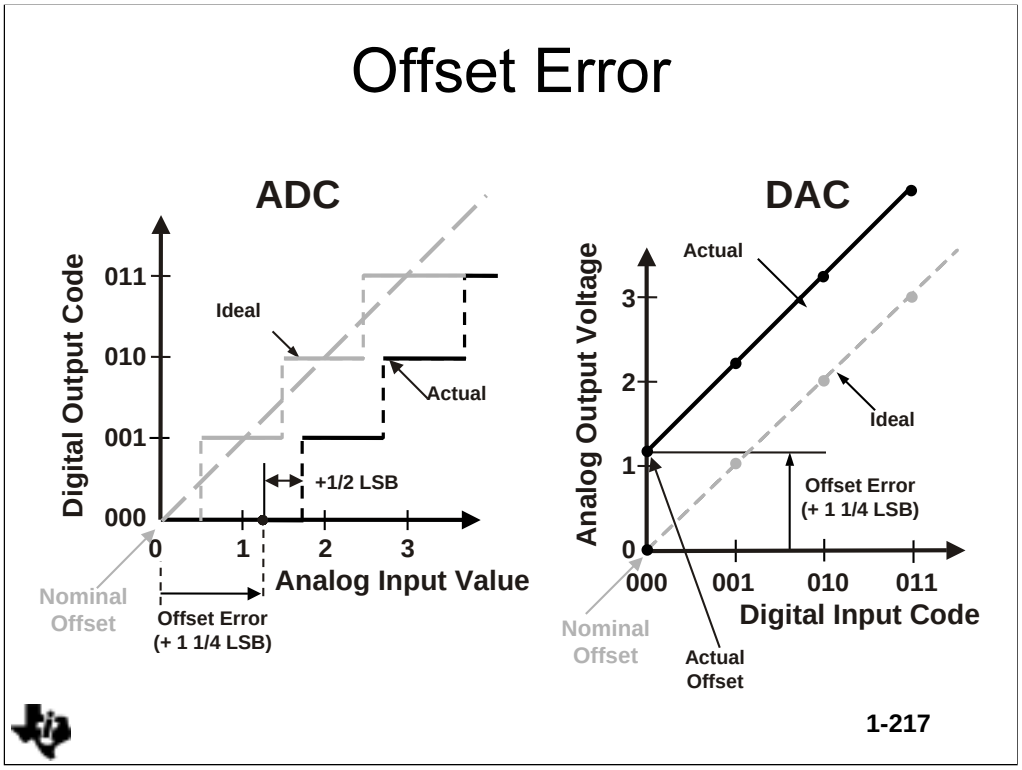

Offset Error

Offset error is best described by looking at a data converter transfer curve. The curve is the same in principle as the transfer curve for an amplifier with the difference that the curve is a stair step.

The ideal transfer curve when plotted as a straight line will intersect the graph axis at the origin.

The offset error is defined as the difference between the nominal and actual offset points. For an A/D converter, the offset point is the mid step value when the digital output is zero and for a DAC it is the output value when the digital input is zero. This error affects all codes by the same amount and can usually be compensated by a trimming process. If trimming is not possible, this error is referred to as the zero-scale error.

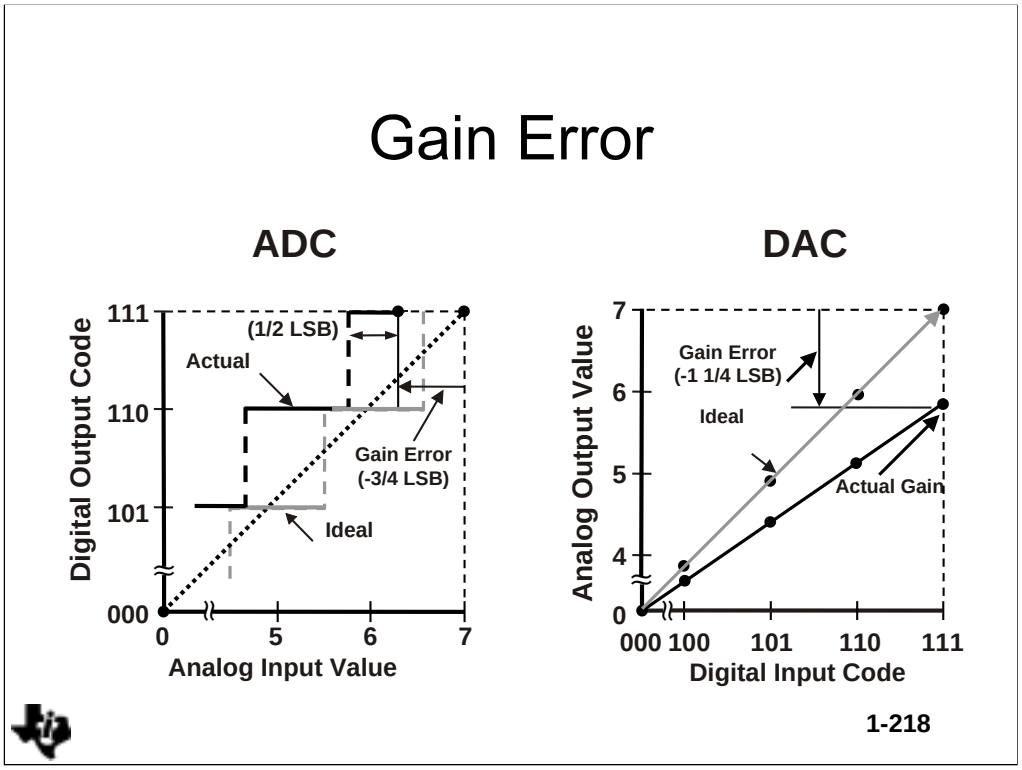

Gain Error

Converter gain like amplifier gain is the slope of the transfer curve.

The gain error as shown in the picture is defined as the difference between the nominal and actual gain points on the transfer function after the offset error has been corrected to zero. For an ADC, the gain point is the midstep value when the digital output is full scale, and for a DAC it is the step value when the digital input is full scale. This error represents a difference in the slope of the actual and ideal transfer functions and as such corresponds to the same percentage error in each step. This error can also usually be adjusted to zero by trimming.

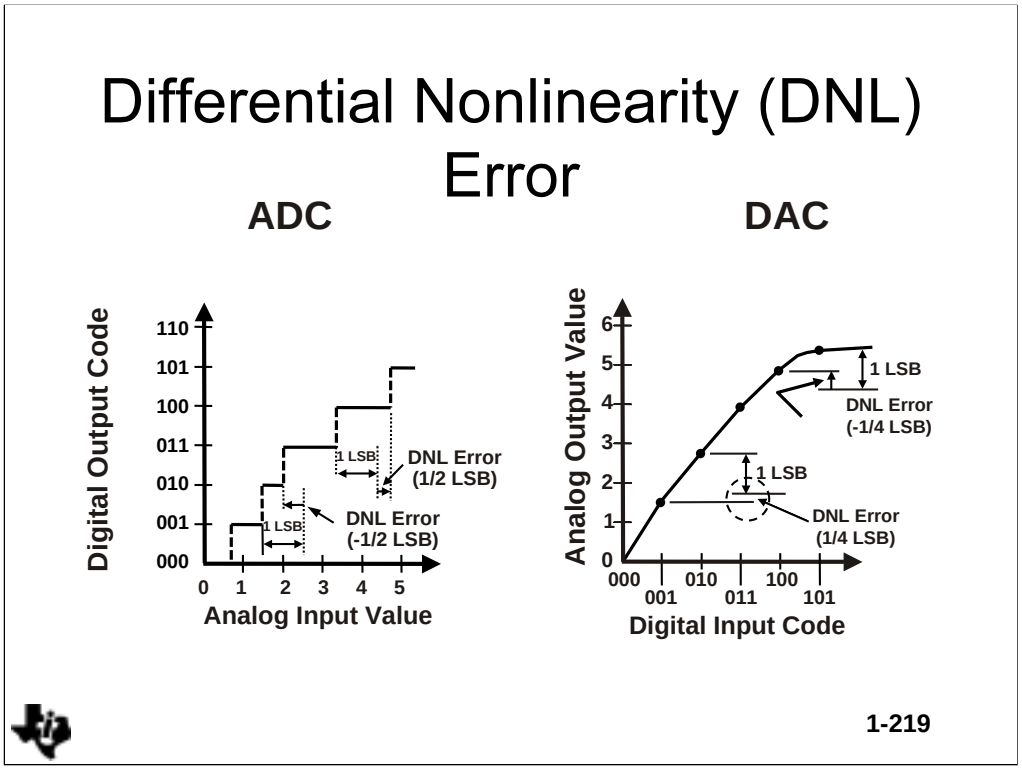

Differential Nonlinearity (DNL) Error

The differential nonlinearity error shown in the figure above (sometimes seen as simply differential linearity) is the difference between an actual step width (for an ADC) or step height (for a DAC) and the ideal value of 1 LSB. Therefore if the step width or height is exactly 1 LSB, then the differential nonlinearity error is zero. If the DNL exceeds 1 LSB, there is a possibility that the converter can become nonmonotonic. This means that the magnitude of the output gets smaller for an increase in the magnitude of the input. In an ADC there is also a possibility that there can be missing codes i.e., one or more of the possible 2^n binary codes are never output.

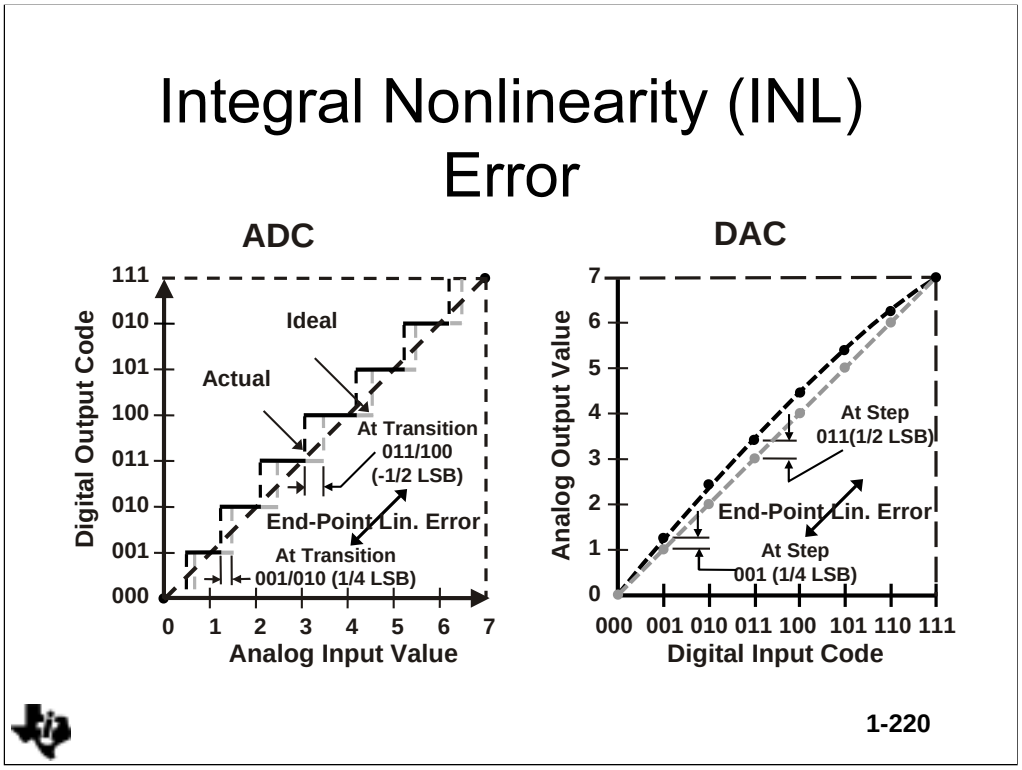

Integral Nonlinearity (INL) Error

The integral nonlinearity error is shown in the figure above. It is sometimes seen as simply deviation of the values on the actual transfer function from a straight line. This straight line can be either a best straight line which is drawn so as to minimize these deviations or it can be a line drawn between the end points of the transfer function once the gain and offset errors have been nullified. The second method is called end-point linearity and is the usual definition adopted since it can be verified more directly.

For an ADC the deviations are measured at the transitions from one step to the next, and for the DAC they are measured at each step. The name integral nonlinearity derives from the fact that the summation of the differential nonlinearities from the bottom up to a particular step, determines the value of the integral nonlinearity at that step.

Both INL and DNL impact system performance as distortion.

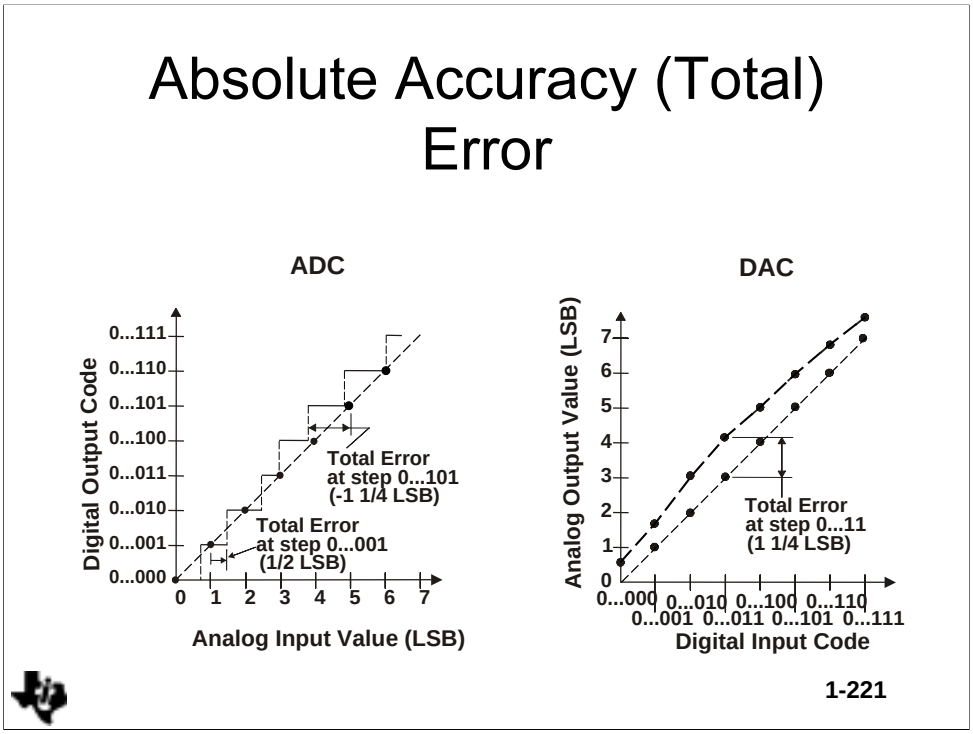

Absolute Accuracy (Total) Error

The absolute accuracy or total error of an ADC as shown in the picture is the maximum value of the difference between analog value and the ideal midstep value. It includes offset, gain, and integral linearity errors and also the quantization error in the case of an ADC.

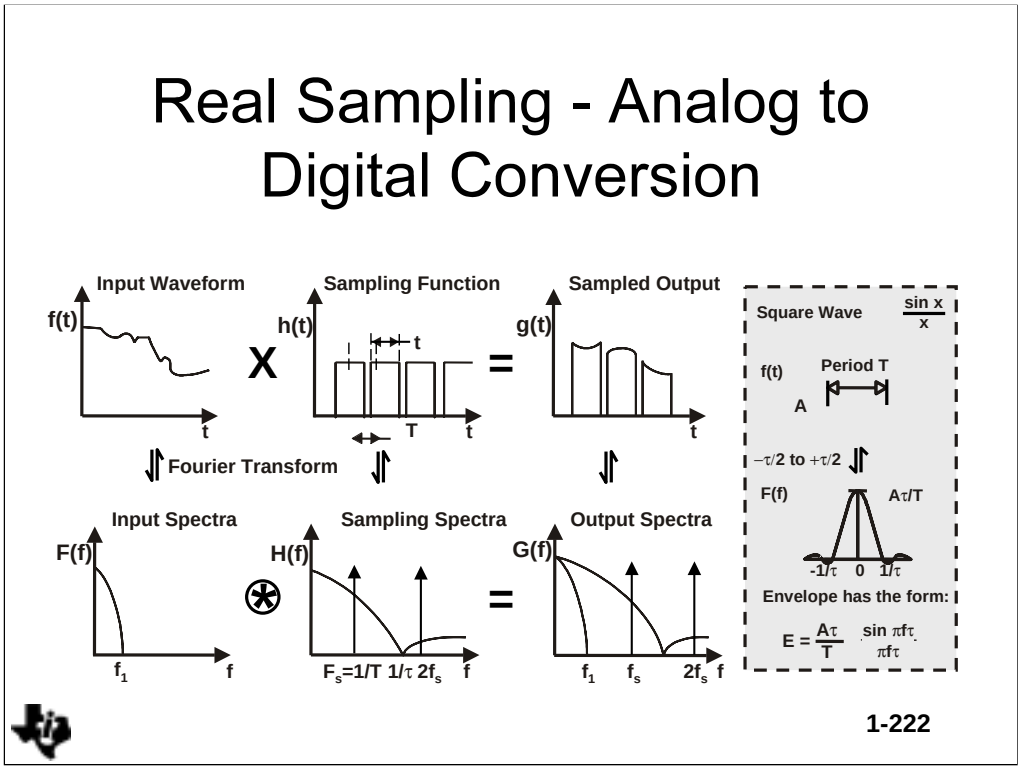

Real Sampling Analog to Digital Conversion

Sampling analog input signals with a unit impulse is an ideal case, which can only be approximated in practice. As shown in the above figure, a real sampling pulse will have a finite width τ, but this should still be much shorter than the sampling interval T. The effect of a sampling pulse τ of finite width is to multiply the input signal by a (sinx)/x function in the frequency domain, as shown above, and attenuate the higher frequencies. The narrower the sampling pulse τ the lower this attenuation will be.

For practical sample and hold (S/H) devices and analog to digital converters that contain an S/H function the aperture over which the incoming signal is sampled gives the effective sampling pulse width. This aperture is the transition time from sample to hold and the value held is the average input over this transition. In this situation the sampling pulse width is the uncertainty or jitter in the sampling instant caused by noise on the digital hold signal within the device. For analog to digital converters, usually of older design, that does not include a S/H function the aperture or sampling pulse width is equal to the conversion time.

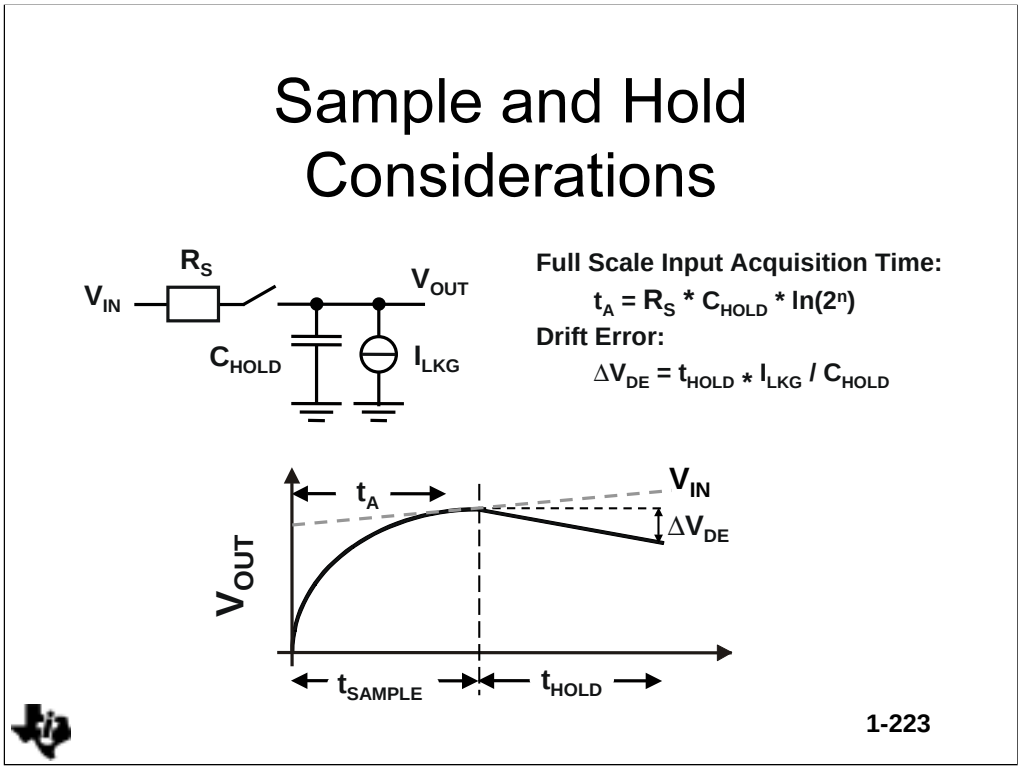

Sample and Hold Considerations

Acquisition Time

During the sampling phase, period t_{SAMPLE}, of a sample and hold circuit's operation it acquires and tracks the input signal to within a specified error band.

The Acquisition time, t_A, required depends on the impedance driving the sample and hold and the capacitor value within the sample and hold. The worst case value for the acquisition time when the input voltage goes from a minimum input to a maximum input, that is the input range of the ADC that the sample and hold is driving.

Voltage Drift

Once the signal has been held, its output will start to droop due to the leakage of the capacitor, open circuit leakage of the analogue switch and impedance of the following stage.

Assuming a constant leakage current of I_{LKG} over the hold period the held signal will have dropped by:

$$V_{Droop} = t_{HOLD} * I_{LKG} / C_{HOLD}$$

Aperture-Jitter (Sampling Uncertainty)

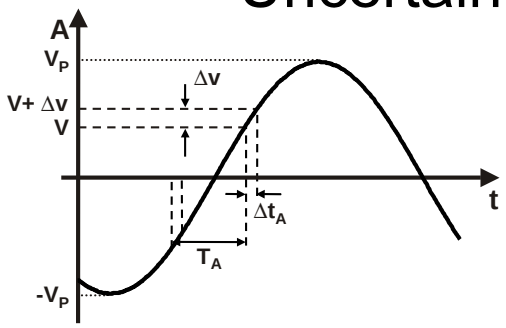

The Aperture Error is less than 1 LSB, if:

$$\Delta t_A < \frac{1}{2^n \times \pi \times f_{max}}$$

In a 12-bit system with a maximum signal frequency of 20 MHz, the Aperture-Jitter has to be less than 3.8 ps !

1-224

Aperture Jitter (Sampling Uncertainty)

A parameter, which may decrease the SNR of the system, is caused by the sampling uncertainty, or the Aperture-Jitter. If the aperture time varies by the time Δt_A, an error is caused which is equal to the change Δv in the voltage. This results into a degradation of the SNR of an ADC. To calculate the maximum time Δt_A which results into an error less than 1 LSB, a sine wave with the maximum frequency f_{max} as an input signal is considered. This can be expressed as:

$$v(t) = V_P \times \sin \omega t$$

The slope of the sine signal is: $\frac{dv}{dt} = V_P \times \omega \times \cos \omega t$

The maximum slope occurs when $\cos\omega t = 1$, or at the zero-crossing point.

This results in: $\Delta t_A = \frac{\Delta v}{V_P \times \omega}$. In order to limit the error in the change of the voltage to less than 1 LSB (1 LSB can be expressed as $\frac{2V_P}{2^n}$), Δt_A results in: $\Delta t_A < \frac{1}{(2^n) \times \pi \times f_{max}}$.

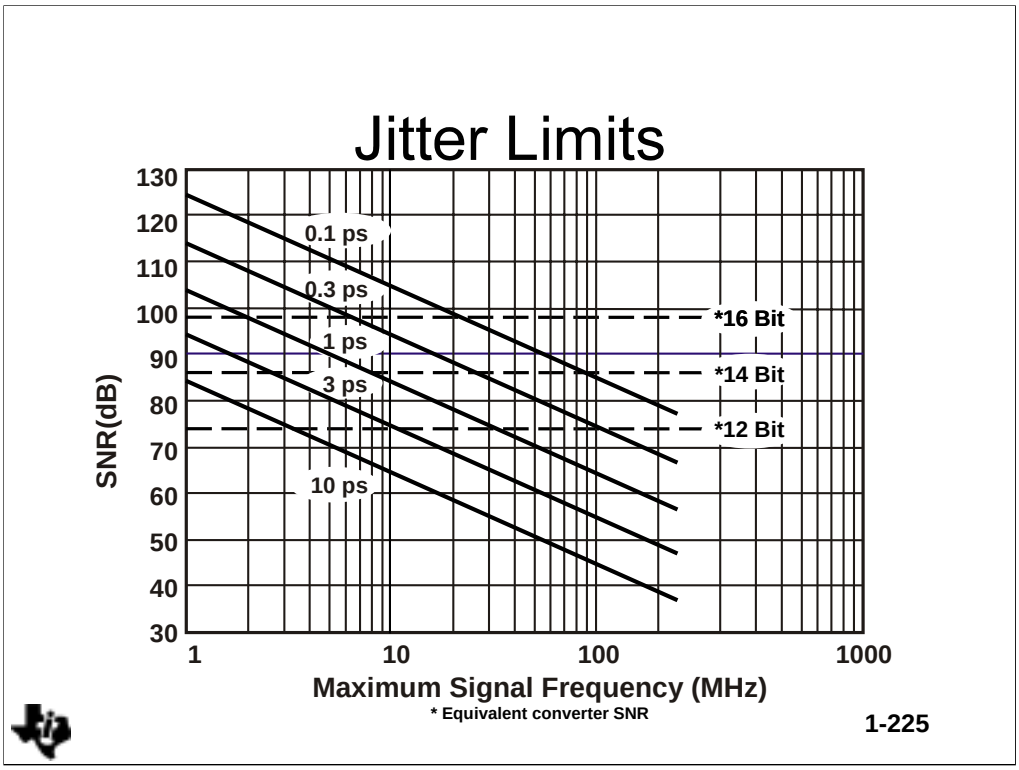

Jitter Limits

The degradation of the SNR, caused by the phase jitter, is a function of the frequency and the maximum phase jitter t_j. As described before, the slew rate of a sine wave can be expressed by:

$$\frac{dv}{dt} = V_P \times \omega \times \cos \omega t$$

and the maximum slew rate of a sine wave is at the zero-crossing point.

$$\frac{dv}{dt}\Big|_{max} = V_P \times \omega$$

The rms value is then $\frac{dv}{dt}RMS = \frac{V_P \times \omega}{\sqrt{2}}$, therefore $\Delta V_{rms} = dv_{rms} \times dt$ (with $dt = t_j$). The SNR is given by: $SNR = \frac{V_P}{\sqrt{2}\Delta Vrms}$, expressed in dB:

$$SNR_{(dB)} = 20 \times \log \frac{1}{2 \times \pi \times f \times t_j}$$

For instance, with a jitter of 3 ps and with a maximum signal frequency of 10 MHz, the SNR is about 74 dB.

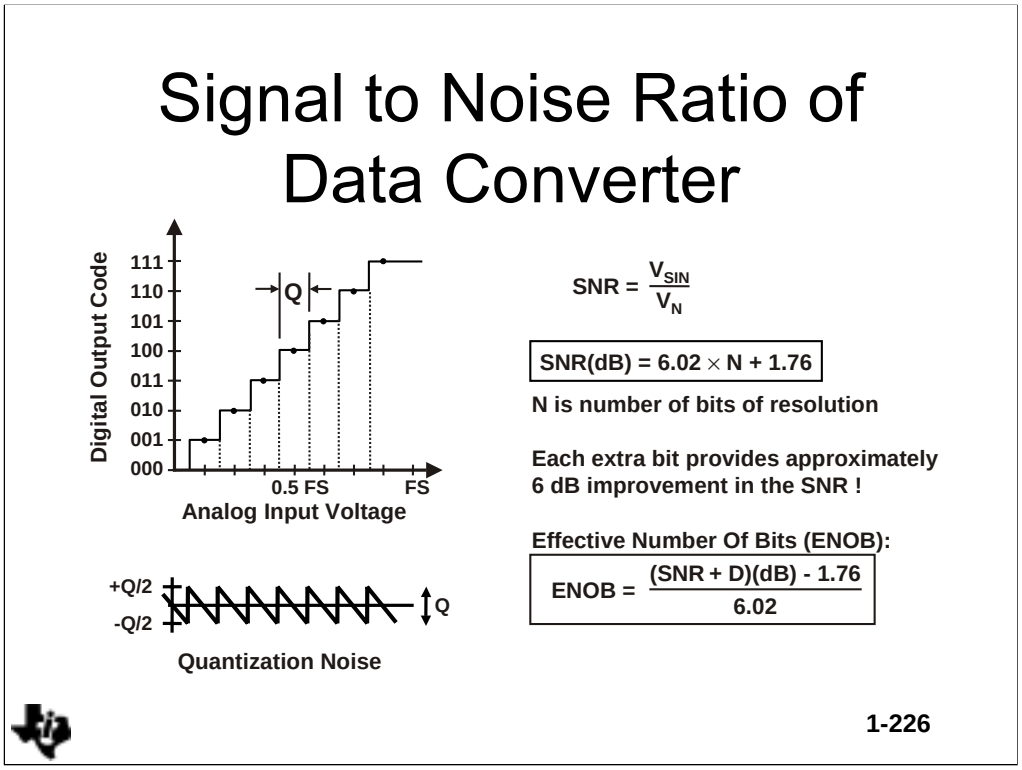

Signal to Noise Ratio of Data Converter

The Signal to Noise Ratio (SNR also often referred to as S/R) is a very important parameter for an A/D converter. The SNR is the ratio of the rms (root mean square) value of the input signal to the rms value of the quantization noise. The input signal is typically a sine wave with a maximum amplitude V_{peak}. The rms value can be calculated as follows:

$$V_{SIN(RMS)} = \frac{V_{P\,PEAK}}{\sqrt{2}} = \frac{V_{FSR}}{2\times\sqrt{2}}$$

The quantization noise voltage, which is also shown in the picture, is similar to a sawtooth voltage waveform. The rms value of a sawtooth waveform is: $V_N = \frac{V_P}{\sqrt{3}}$ where V_P is Q/2. This results into $V_N = \frac{Q}{2\times\sqrt{3}} = \frac{Q}{\sqrt{12}} = \frac{V_{FSR}}{2^n\sqrt{12}}$. Therefore, the SNR can be derived.

$$SNR = \frac{V_{FSR}}{2\sqrt{2}} \times \frac{2^n\sqrt{12}}{V_{FSR}} = 2^n\sqrt{1.5}$$

$$SNR(dB) = 20\times\log 2^n + 20\times\log\sqrt{1.5} = n\times 20\times\log 2 + 20\times\log\sqrt{1.5}$$

This can be written as:

$$\boxed{SNR(dB) = 6.02\times n + 1.76} \quad (1)$$

The theoretical SNR of a 12-Bit ADC is approximately 74 dB.

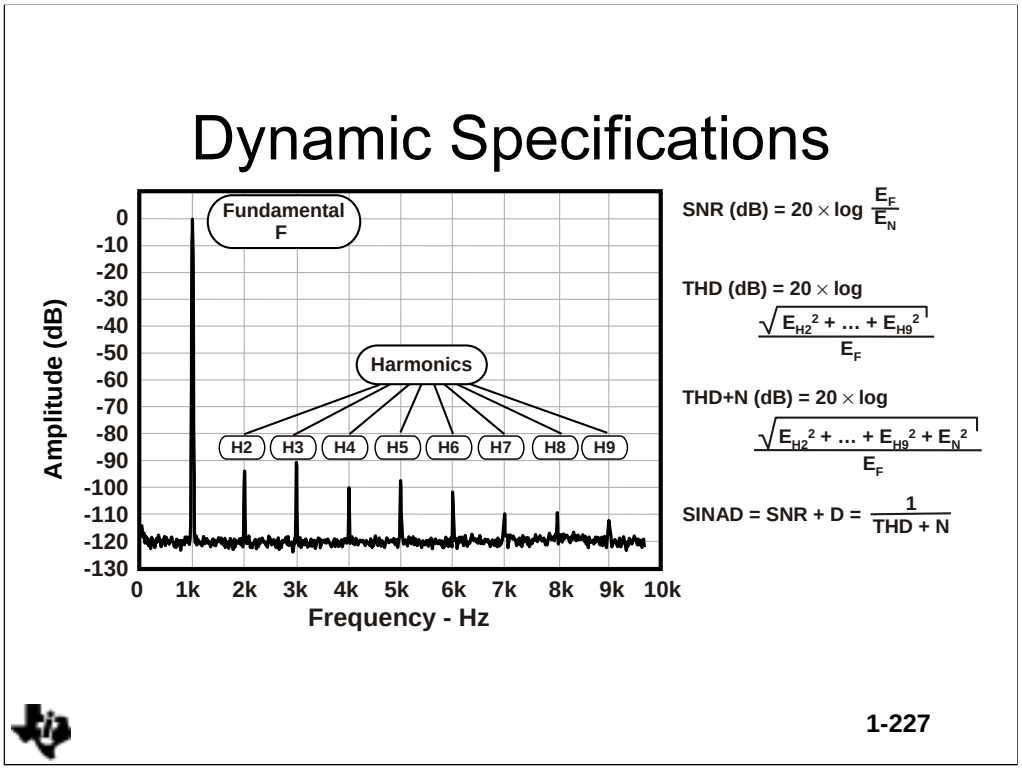

Dynamic Specifications

SNR

For a full-scale sinewave input, the theoretical SNR for an N bit converter is given by: SNR = 6.02N + 1.76 dB as already derived before. The normal way of measuring the SNR for a converter is to digitize a full-scale sinewave and then perform an FFT on the output. The rms power of the fundamental is then compared to the noise floor by inserting a notch filter at the input frequency and the harmonics so that the output is purely due to the effects of noise. The ratio of the two is taken to give a direct measurement of the SNR.

THD

As in SNR testing, the normal way of measuring the distortion for a converter is to digitize a full-scale sinewave input and then perform an FFT on the output. The rms power of the fundamental is then compared to the sum of the harmonics by inserting a notch filter at the input frequency and the harmonics so that the output is purely due to the effects of harmonics. The ratio of the sum of the harmonic amplitudes to the fundamental gives a direct measurement of distortion. The number of harmonics, which are used for the THD calculation, may vary depending on the particular application.

THD + N

The distortion plus noise (THD + N) is the ratio of the sum of the harmonic distortion and noise to the rms power of the input signal. The distortion and noise are measured separately and than added together to form the ratio. The noise voltage relates to the measured bandwidth.

SINAD

The signal to distortion plus noise (SINAD) is the ratio of the input signal to the sum of the harmonic distortion and noise. The distortion and noise are measured separately and than added together to form the ratio. The SINAD is the reciprocal to the THD + N. The SINAD and THD+N are a good indication of the overall dynamic performance of the ADC, because all components of noise and distortion are included.

This measurement is used to determine the **E**ffective **N**umber **of B**its (ENOB) of accuracy the converter displays at that frequency. For example, a nominal 8 bit resolution ADC may be specified as having 45dB SNR at a particular input frequency. The number of effective bits is defined as

$$\mathrm{ENOB} = \frac{\mathrm{SNR}_{\mathrm{REAL}} - 1.76}{6.02} = 7.2\,\mathrm{bits}$$

The actual performance of the device is therefore less than its nominal resolution at this frequency.

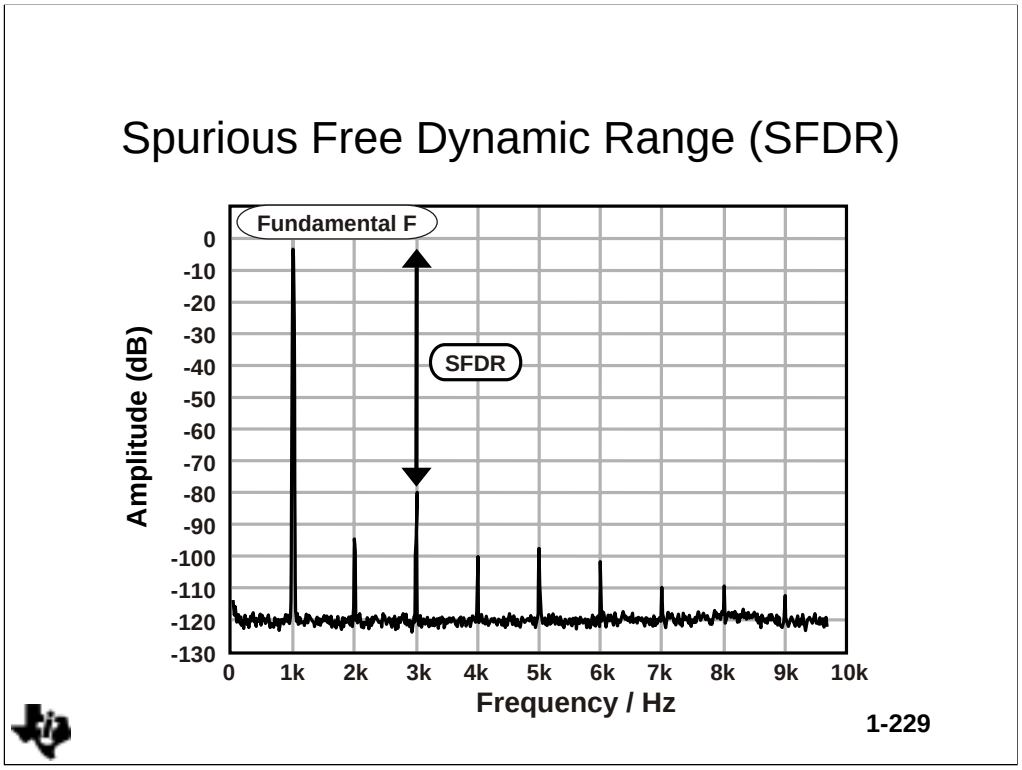

Spurious-Free Dynamic Range

The Spurious-Free Dynamic Range (SFDR) is also a very important dynamic specification for wide dynamic range and high frequency applications. The SFDR is the difference in dB between the maximum signal component and the largest distortion component as shown in the picture. The SFDR becomes an issue when the spectral purity of a converter is important. This is the case for A/D converters in noisy receiver environments where the converter must digitize a small-amplitude signal.

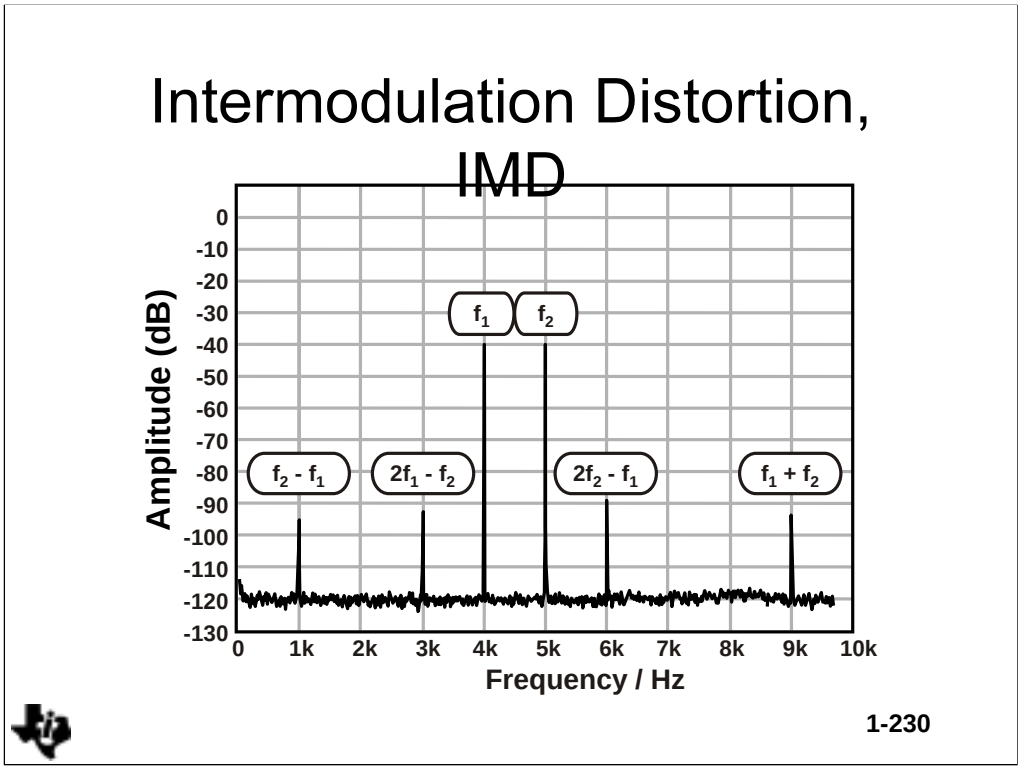

Intermodulation Distortion IMD

Intermodulation distortion is a measurement of how much one frequency modulates another frequency within a system. Two frequencies are added together and applied to the system. The output harmonic products are measured and the value is also a measure of linearity. The more linear the system is, the lower the intermodulation products become. The second order terms are: $f_1 + f_2$ and $f_2 - f_1$. Third order terms are: $2f_1 + f_2$, $2f_1 - f_2$, $f_1 + 2f_2$ and $f_1 - 2f_2$. Especially when the distortion frequencies are close to the original frequencies, it will be very difficult to filter these out. Also in RF applications, the IMD products can mask out the information of very small-amplitude signals.

Summary

- What is important:
  - Speed (samples/second)
  - Resolution (bits)
  - Reference Voltage
  - Errors/Distortion
  - Coding
  - Clocks
- Remember, errors are always present but can be accommodated.



Converter Applications



Data Converter Applications

- DAC Applications
  - Precision programmable comparator
  - Programmable gain amplifier
- ADC Applications
  - Low speed ADC circuit
  - Digital Radio
  - PC Camera



1-233

This section will cover data converter applications. The intent is not to examine these circuits in great detail, rather to show several different applications which utilize data converters.

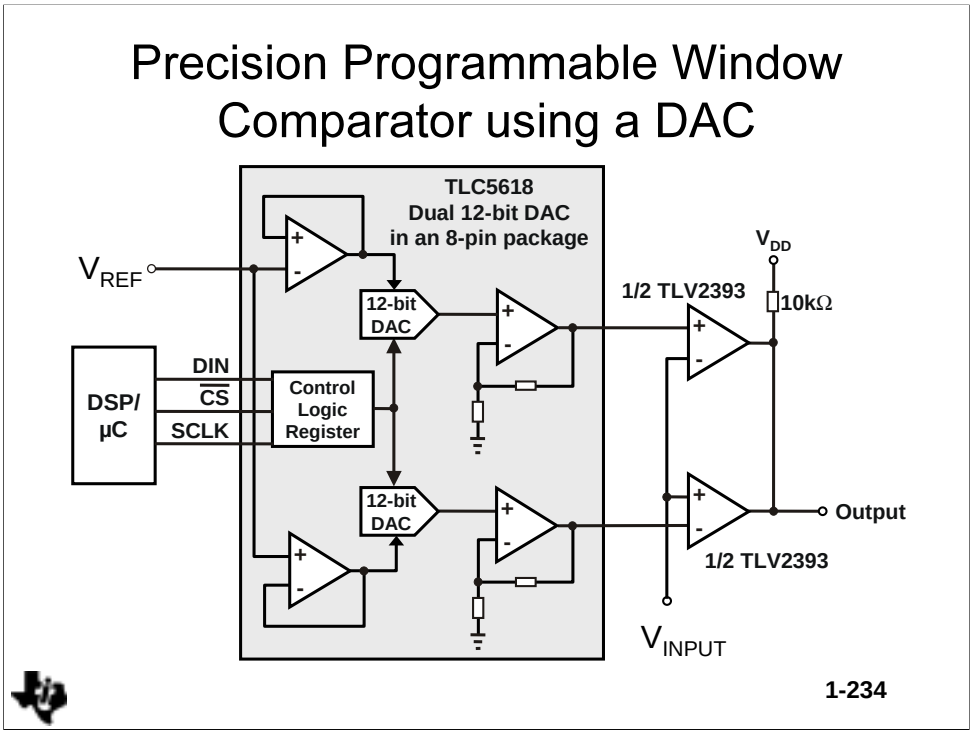

This circuit is a programmable precision comparator. The purpose of this circuit is to compare the input signal to two programmable levels.

Whenever the input voltage exceeds the upper level or falls below the lower level the output changes from V_{CC} to Ground. The two levels are programmed by using the analog output of a DAC, allowing these levels to be adjusted by computer control.

Typical uses might be to monitor a critical temperature or fluid level.

The adjustment resolution for a 12 bit converter with a 5 reference voltage is:

$$1LSB = \frac{V_{REF}}{2^n} = \frac{5V}{2^{12}} = 1.22mV$$

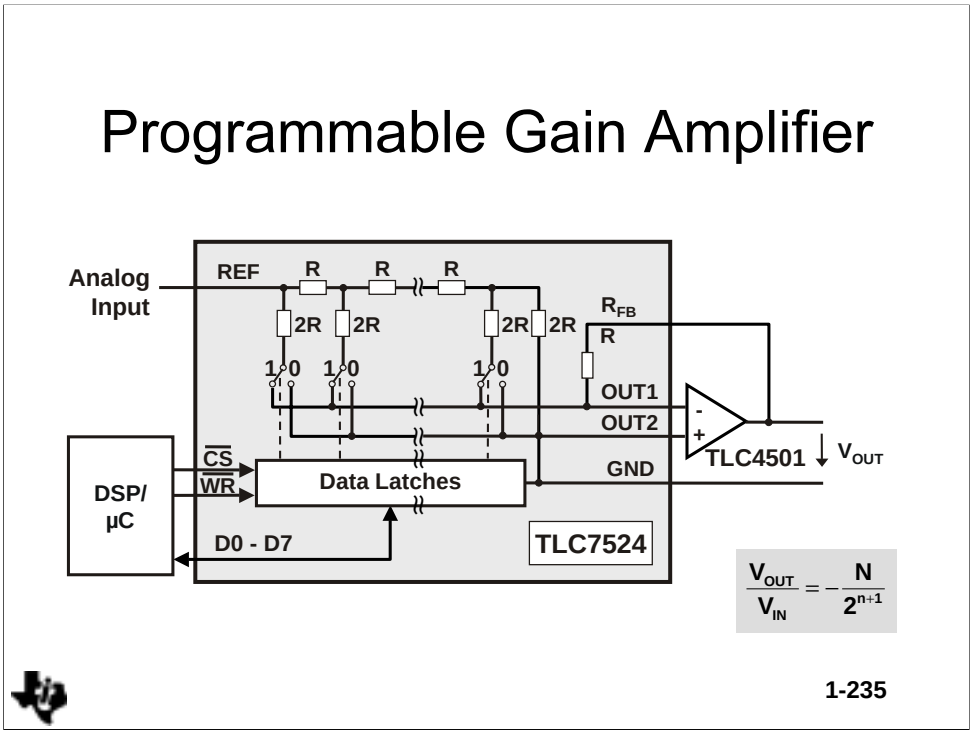

This circuit is a programmable gain amplifier. The gain (or more accurately attenuation since the maximum gain = 1) is controlled by a DAC. This particular DAC architecture uses a series of binary weighted resistors which are switched together in parallel to accomplish a divider circuit. In this circuit a reference voltage is not used. The analog input signal is fed into the reference and a voltage is output which is the input divided by the programmable resistor ladder.

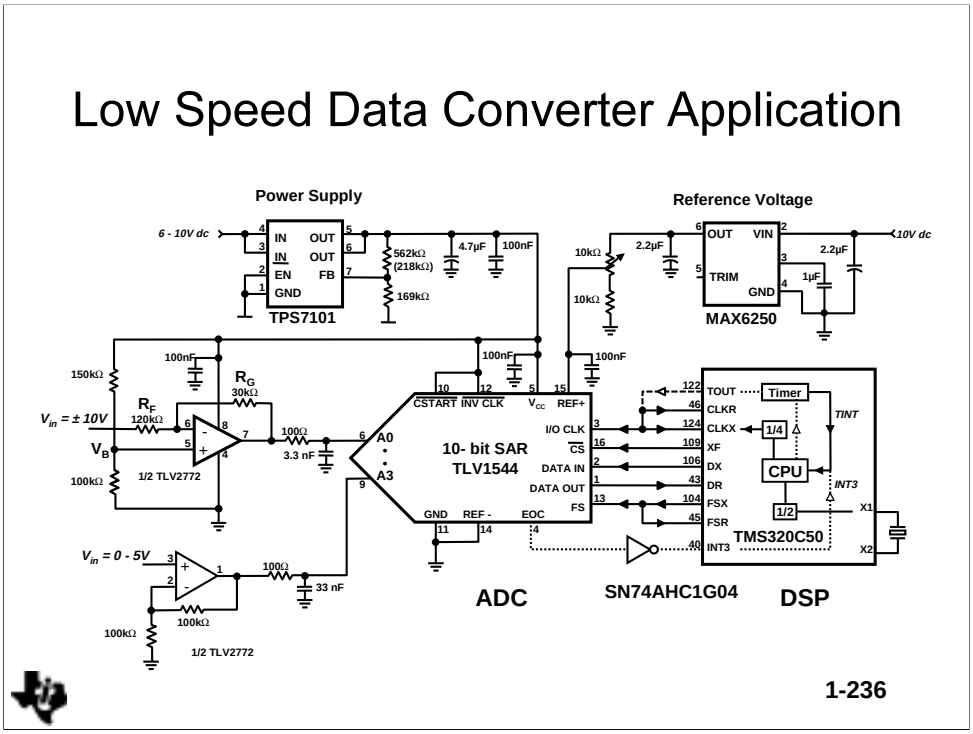

ADC applications have four key factors. Selection of the ADC and subsequently the performance required. The input circuit, typically an amplifier must be adequate in bandwidth, low in noise, and sufficiently low in drive impedance. A stable reference voltage is necessary to provide accurate measurements. The last consideration is the digital interface between the converter and the digital circuitry, typically a DSP.

This circuit is a compete system including the four key areas plus a power supply. Some of the features to note are:

- Op Amp input circuit with attenuation (R_G=120kΩ, R_F=30kΩ).
- Bias voltage generated by divider circuit (150kΩ & 150kΩ).
- Multiple analog input channels
- Low pass filter on amplifier output
- SAR data converter.
- Precision voltage reference with adjustable divider.

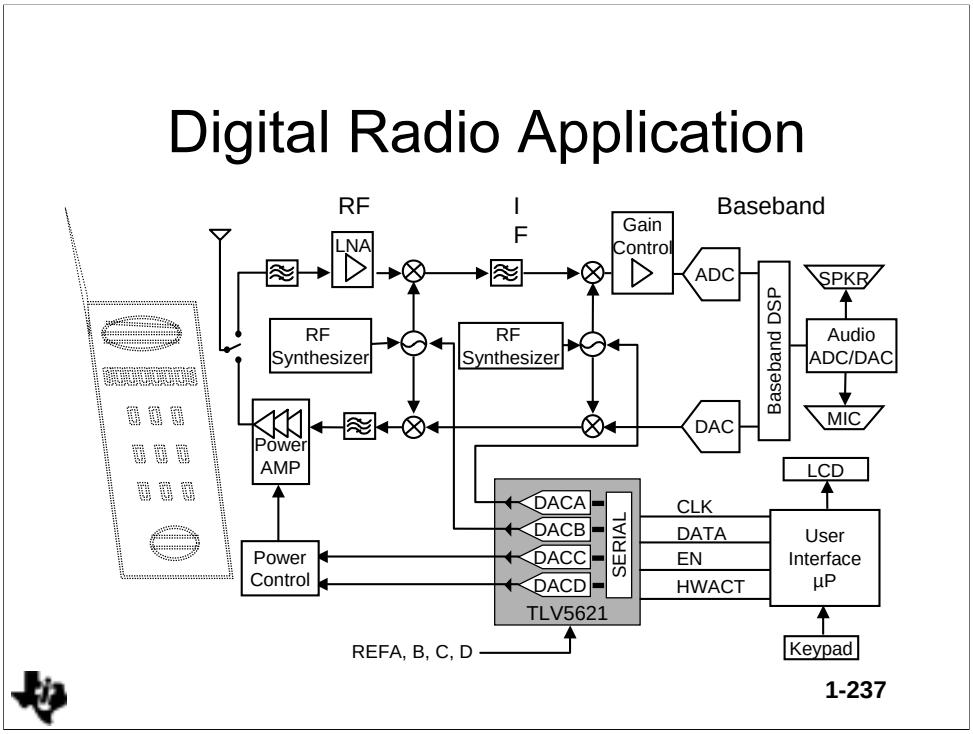

A typical digital radio application is digitally controlled. This example uses a four channel DAC to control output power, and mixer frequencies. This circuit also uses a combination ADC and DAC to interface with the microphone and speaker.

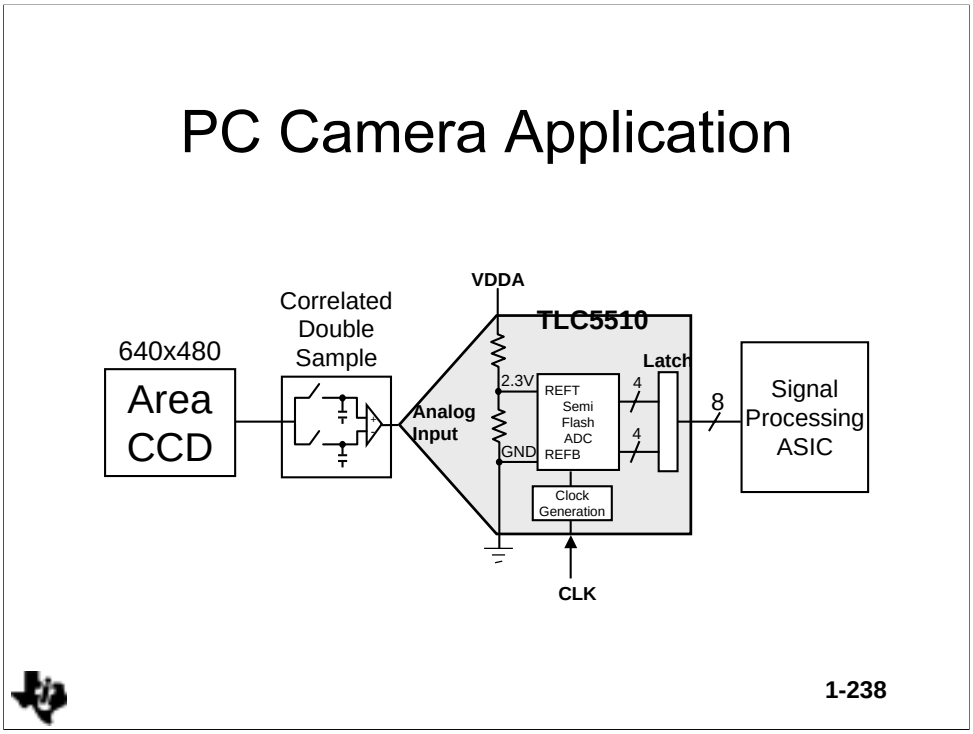

This is a PC camera circuit. For applications using a charge coupled device (CCD) sensor, it is common to use a correlated double sampler (CDS) to process the CCD signal. The CDS will sample both the reference voltage and the active video and then output the difference of the two. This is typically 0V (minimum intensity) and 2V (maximum intensity). This requires an ADC that allows analog inputs as low as 0V. The CDS output to can be directly connected input of the ADC.

Summary

- Data converters are used almost everywhere digital circuitry interfaces to the real world.
- The basic system diagram is very similar regardless of the type of converter used.



Power Supply Applications

Power Supplies

- Linear Regulator
- Charge Pump
- Switch Mode Regulator
- Which is Best?



1-241

Why talk about power supplies? Every device we have covered has power supply pins. Proper operation of any electronic circuit whether analog or digital depends on having the correct source of power. Technically a power supply consists of an energy source (battery, solar cell, AC power mains, etc.) and in most cases a regulator circuit. This section will look at linear, charge pump, and switch mode regulator circuits.

What is a Regulator

- Conditions power from source to load.
  - Minimizes change in output voltage with changes in load.
  - Minimizes change in output voltage with changes in input voltage.
- Changes voltage (increase or decrease)



1-242

The purpose of a regulator circuit is to condition the power delivered from the energy source. Regulation can be as simple as increasing or decreasing the voltage and as complex as providing very accurate reference voltages for data converters. Most power supplies today use an integrated solution for the regulator function. With an integrated solution external passive components are required. Selection of the regulator and the external components are key to implementing a power supply design.

What is a Linear Regulator

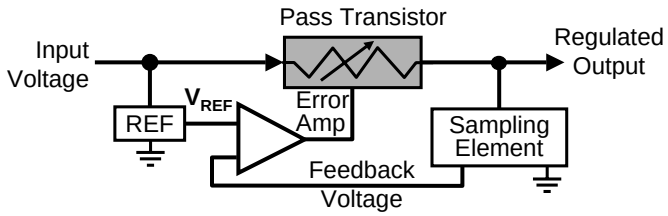

- Current flow through the device is continuous
- Output voltage is controlled by varying the impedance of the pass transistor
- Input voltage must be greater than the output voltage
- If the input voltage gets too low, the output drops out of regulation



1-243

Linear voltage regulators are often used where the input power source is unregulated or clean supplies are required in a noisy environment, such as precision analog circuits.

The linear regulator controls the output voltage by varying the impedance of a pass element. The input voltage is always higher than the output voltage. The power that is not needed is dissipated by the pass element, i.e. converted into heat.

The output voltage is divided down with a resistive divider and compared with the reference voltage. If the output voltage is too low, the error amplifier drives the pass element more reducing it's impedance. If the output voltage is too high the error amplifier drives the pass element a little less increasing the impedance. The output voltage is therefore regulated by the resistive divider and error amplifier.

The power dissipation of a linear regulator depends on the difference between the input and output voltage and the output current. This means a voltage regulator is only useful and efficient if the input-output differential is small compared to the output voltage.

What is an LDO (Low Dropout Regulator)?

A linear regulator that will operate with an input/output difference < 2V

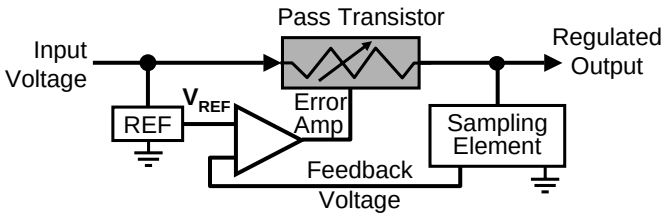

– **An LDO is designed to minimize the difference between the input voltage and the regulated output**



1-244

The dropout voltage is the voltage difference between input and output voltage when regulation ceases.

The dropout voltage of a regulator with a npn-transistor as pass element is very high and depends on the driver capability of the error amplifier, and is a minimum of one forward voltage of a diode. The quiescent current is not very critical because it is part of the output current. Both dropout and quiescent current can increase when the transistor aproaches saturation just prior to dropout.

In a regulator with a pnp-transistor the dropout voltage is lower, i.e. the saturation voltage of the transistor, and is independent on the driver capability of the error amplifier because the base is driven to ground. The quiescent current in such a regulator is very critical because bipolar transistors are current driven and in a regulator with a pnp pass element, the current is lost (it flows from the input to ground). Therefore, this device would also decrease the battery life quickly.

Low dropout (LDO) voltage regulators with PMOS-transistor pass elements have a dropout voltage that is proportional to the output current. The dropout voltage is dependent on the on-resistance R_{DSon}. The quiescent current is very low (PMOS-transistors are voltage driven) and it stays low over load and input voltage. The load, line, and ripple rejection can be increased with good design techniques.

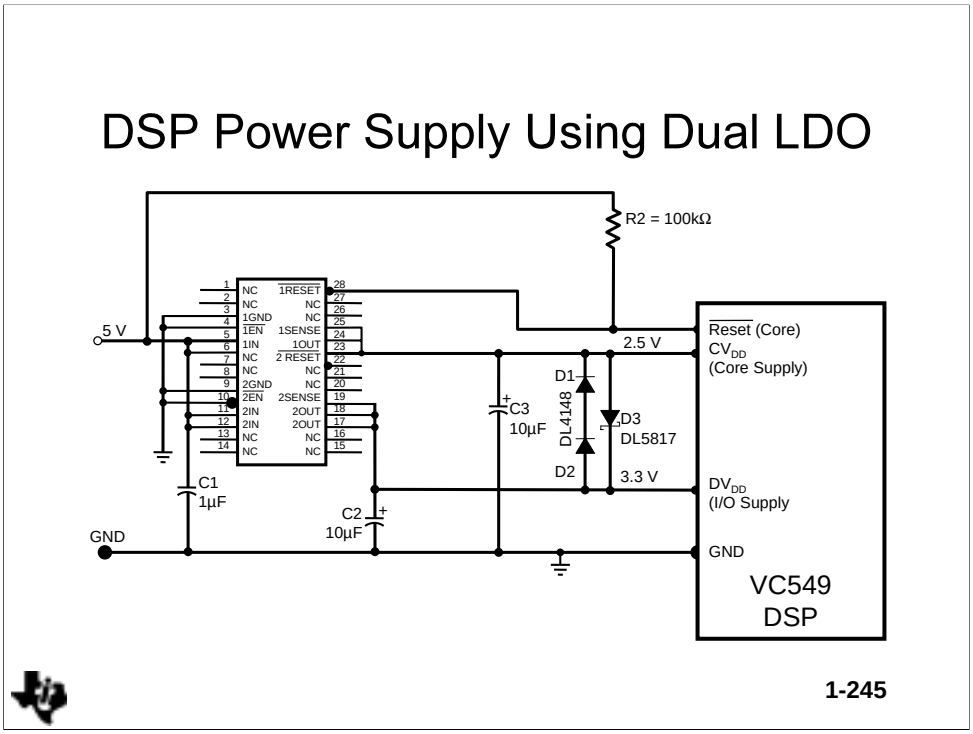

DSPs often require two power supplies. The core supply furnishes power to the processor circuits. The I/O supply furnishes power just to the input/output circuitry. This scheme reduces power consumption while still allowing the processor to interface with conventional logic circuits operating at higher voltage levels.

The application shown above uses a dual LDO circuit to provide 3.3V and 2.5V from a single 5V power source. The integrated circuit contains a pass transistor, reference voltage and all control circuits necessary to implement the system. External filter capacitors are required on the input and both outputs of the LDO.

Efficiency of this circuit is:

$$\frac{P_{OUT}}{P_{IN}} = \frac{(I_{CVdd} \times CVdd) + (I_{DVdd} \times DVdd)}{5(I_{CVdd} + I_{DVdd})}$$

$$\frac{P_{OUT}}{P_{IN}} = \frac{(2.5)I_{CVdd} + (3.3)I_{DVdd}}{5(I_{CVdd} + I_{DVdd})}$$

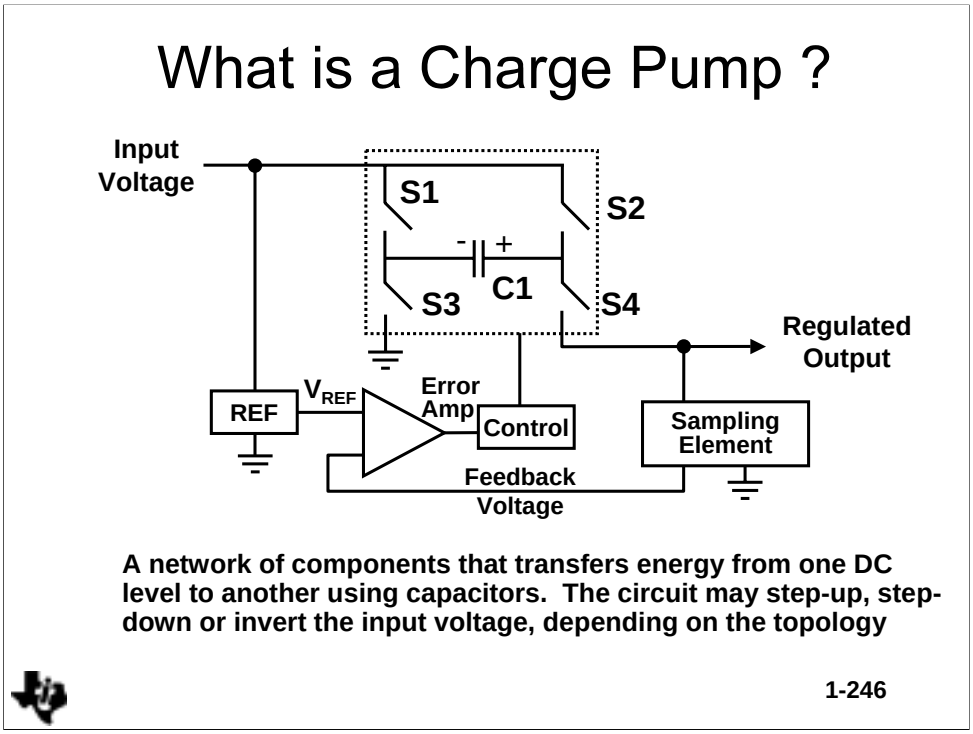

A charge pump regulator changes the output voltage by using a set of semiconductor switches and a capacitor. The capacitor serves as an energy storage device in this regulator. The circuit above operates as a voltage doubler by first closing S2 and S3. This causes current to flow through C1 storing a charge (with voltage polarity as shown). When the capacitor is sufficiently charged S2 and S3 are opened. S1 and S4 are now closed effectively adding the voltage across C1 to the supply voltage. A similar circuit can be used to generate a negative voltage by having a different switch arrangement.

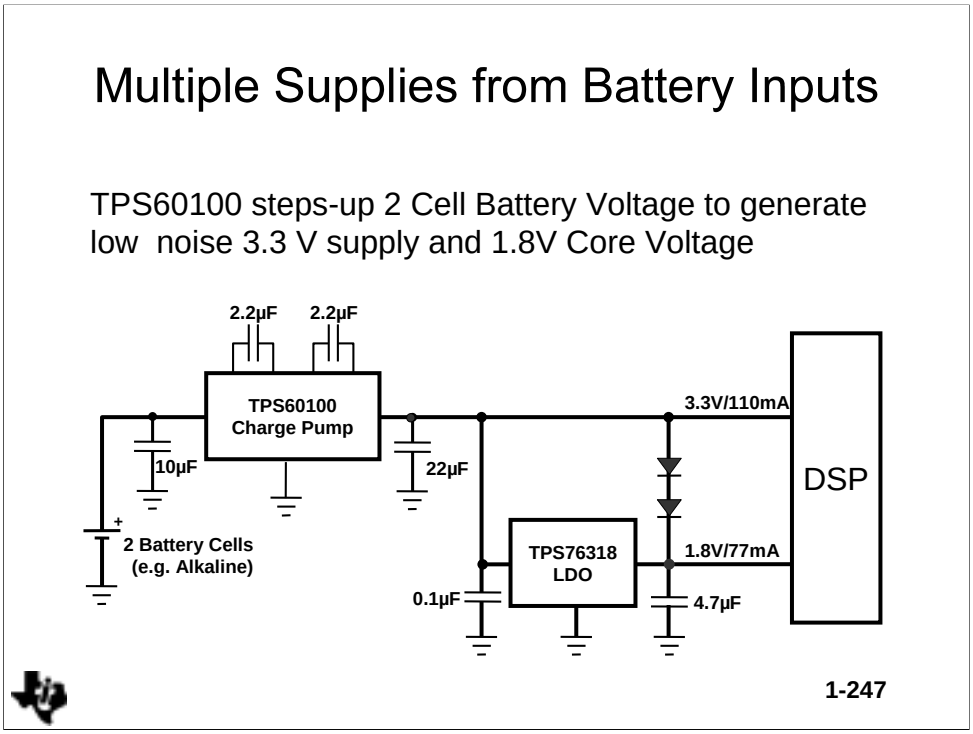

The circuit above uses a charge pump to increase the voltage from a battery and then an LDO to create a second regulated voltage. This is an effective solution for a low power DSP. The charge pump regulator is limited in how much current that can be supplied at the output.

What is a Switching Regulator or DC/DC Converter?

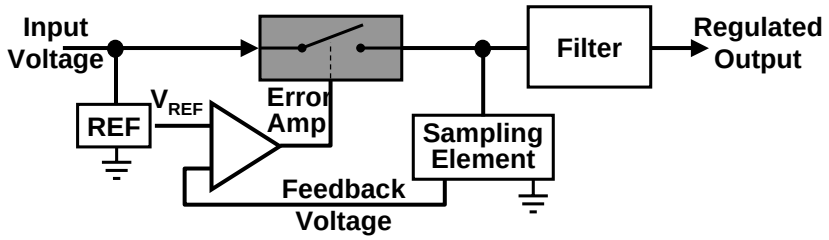

A network of components that transfers power from one DC level to another. The circuit may or may not provide isolation, and may step-up or step-down the input voltage

1-248

The transistor used in a linear regulator works as a variable resistor that reduces the voltage by dissipating the power that is not needed. Therefore, the efficiency is low if the difference between the input and output voltage is high.

The switch-mode power supply uses a transistor switch, either fully conducting or blocking. The switch is opened and closed at a high frequency and only closed as long as needed to transfer the necessary output power. The efficiency can be very high (90 % or more). The basic system is the same. A portion of the output is sampled, compared to a reference and the result is used to control the switch operation. The switch mode regulator requires an output filter. This serves both as an energy storage device and a low pass filter for the noise. This type of circuit requires an inductor in the filter. Depending on the filter circuit this regulator can increase, decrease or invert the ouput voltage.

The advantages of a switch-mode power supply compared with a linear regulator are high efficiency, high power-to-weight ratio, and high input to output differential.

Nevertheless, there are also advantages of linear regulators. In a linear regulator the electrical noise is lower, the design of a linear regulator is less complex, and the output ripple is smaller.

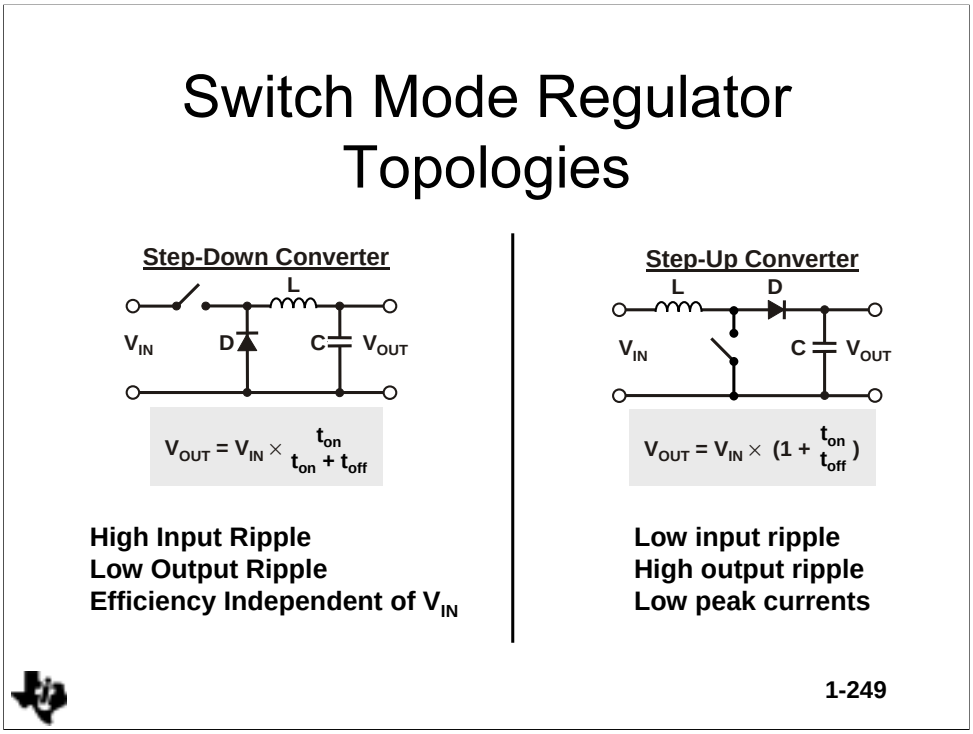

Switch-Mode Regulator Topologies

There are four different basic switch mode power supply topologies.

Switch-mode supplies are controlled by the opening and closing of a switch.

Making the output voltage a function of t_{on} and t_{off} .

t_{on}: time where current flows through the switch

t_{off}: time where current flows through the diode (continuous-mode only)

Step-Down Converter (also called Buck Converter)

When the switching element is closed, current flows through the inductor. When the switch is open the energy stored in the inductor maintains the current flow to the load and the charge on the capacitor.

Compared with the other three basic topologies the output ripple is the lowest because of the location of the inductor. This makes it appropriate for noise-sensitive loads. The disadvantages of this topology are that the switch has to be a PMOS-transistor or a floating drive must be used for the switch and usually there is a need for a significant input EMI filter.

Step-Up Converter (also called Boost Converter)

When the switching element is closed, current flows only into the inductor. When the switch opens the energy stored in the inductor plus the input voltage flows to the load and charges the capacitor.

The output ripple of this topology is relatively high. A step-up converter is very useful for low input voltages or low power applications, for example in battery-driven systems where some devices need 5-V supply voltage. The biggest disadvantage of this topology is the high output voltage ripple because the output capacitor has to supply the entire load during the transistor on-time.

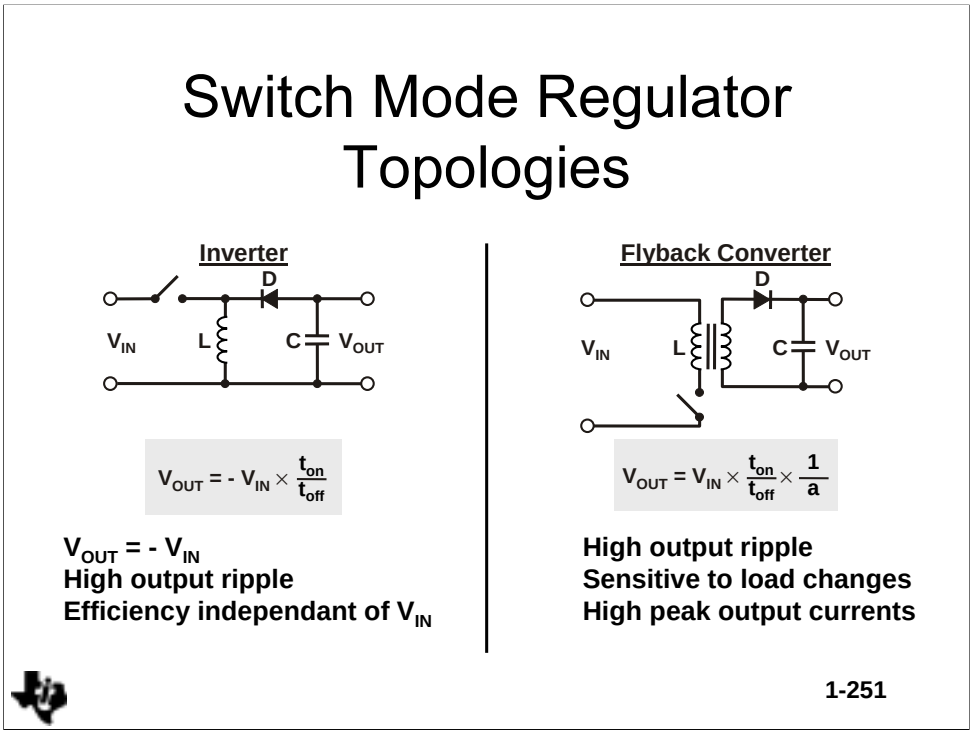

Inverter (also called Buck-Boost Converter)

When the switching element is closed, current flows into the inductor. When the switch opens the diode-inductor junction goes negative and the energy stored in the inductor flows into the load and charges the capacitor.

The output ripple is also high because the output capacitor has to supply the entire load during one portion of the switching cycle. Some battery driven systems like mobile phones need a negative voltage to supply some RF amplifiers.

Flyback Converter

When the switching element is closed, current charges the first inductor. When the switch is open the energy stored in the first inductor is transferred to the second inductor and then to the load and capacitor.

The output ripple is high because, during the on-time the output current is supplied entirely by the output capacitor. This converter can be used in a computer where the supply voltage needs to be decoupled from the net supply and the input voltage needs to be transformed down from, say, 24V to 3V or 5V. This sort of switch mode power supply is normally only used where the space needed for the inductor (transformer) is not a limiting factor.

Linear or Switching Regulator

…Which one is best?

Linear Regulator Advantages

- Simple low-cost design
- Uses few external components; less board space required
- No switching noise; low output ripple

and Disadvantages

- Use only to generate a lower voltage
- Poor efficiency: % Efficiency = $V_{ou}t/V_{in}$
- Power dissipation may be a concern

Linear Regulator is best when

- **V_{in} - V_{out} is small**
- **Low-to-medium current applications**
- **Low output ripple is important**

Switching Regulator Advantages

- Good for voltage increase, decrease or inverting
- High efficiency, 70% to 95%
- Lower power dissipation

and Disadvantages

- More complex and costly design
- High output ripple

Switching Regulator is best when

- **Large Input-to output difference**
- **Medium-to-high current applications**
- **Efficiency is important**
- **Voltage needs to be increase or inverted**

1-252


Copyright 2000
TEXAS INSTRUMENTS
THE WORLD LEADER IN DSP AND ANALOG
TEXAS INSTRUMENTS