Unit 7 Progress Check: FRQ

1. This question is a long free-response question. Show your work for each part of the question.

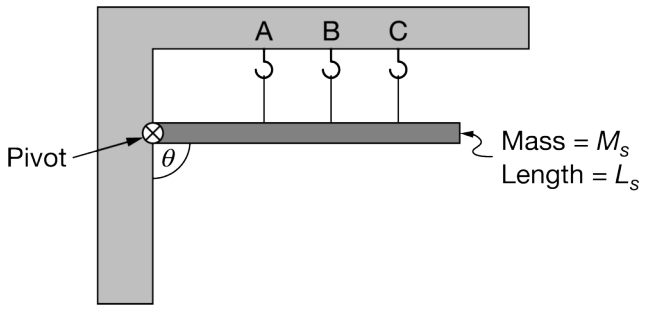

In their physics classroom, students want to hang a heavy sign of mass M_s and length L_s as shown in the figure above. The sign makes an angle θ with the wall. Without any support, the sign would rotate clockwise while its pivot would remain connected to the wall. The students can connect one support cable vertically from one of the hooks above the sign, as indicated by the dotted lines in the diagram.

(a) Rank the three hook locations according to the amount of tension the support cable would experience if the students decided to support the sign from that location. Use 1 for the least tension and 3 for the greatest tension. If two locations would have the same tension, give them the same ranking.

_____ Location A _____ Location B _____ Location C

Briefly explain your ranking.

(b) The students hang the sign with a cable, but the cable breaks and the sign rotates clockwise. The diagram below shows the sign at three different times as it is rotating.

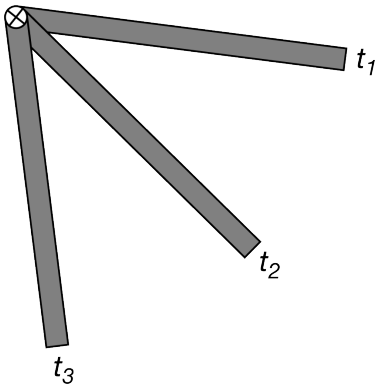

i. Indicate at which time, if any, the angular acceleration α of the sign is greatest, or whether it is the same at all three times.

_____ t_1

_____ t_2

Unit 7 Progress Check: FRQ

_____ t_3

_____ The angular acceleration is the same at t_1, t_2, and t_3.

Provide a physical explanation for your ranking.

ii. Show that α can be modeled with $\frac{3g\sin\theta}{2L_s}$. The rotational inertia of the sign is $I_s = \frac{1}{3}M_sL_s^2$.

(c) The students want to describe the angular velocity ω of the sign as it rotates, and they propose the following equation: $\omega\left(t\right) = \frac{3g\sin\theta}{2L_s}t$.
Regardless of whether or not this equation is correct, does this equation make physical sense?

Students attach a rotary motion sensor to the sign, record ω and θ, and create the graph of the magnitude of ω versus θ shown.

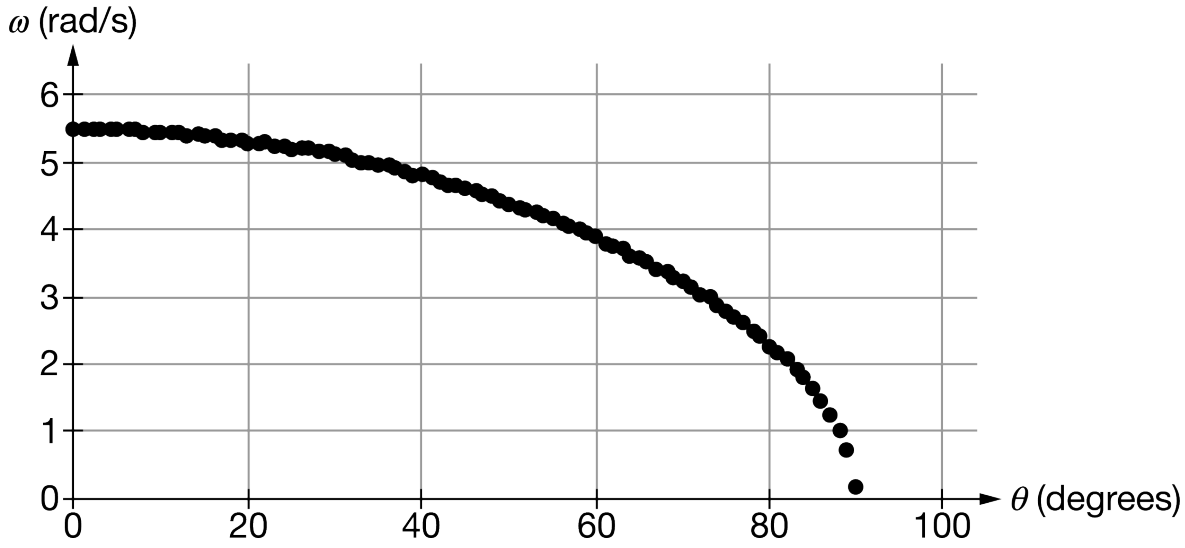

(d) Four students independently derive equations and propose them to describe the motion of the sign. Which equation best matches the data collected?

_____ $\omega(\theta) = \sqrt{\frac{3g\cos\theta}{L_s}}$

_____ $\omega(\theta) = \sqrt{\frac{3L_s\cos\theta}{g}}$

Unit 7 Progress Check: FRQ

_____ $\omega(\theta) = \sqrt{\frac{3g\sin\theta}{L_s}}$

_____ $\omega(\theta) = \sqrt{\frac{3L_s\sin\theta}{g}}$

Justify your answer by citing specific features of the graph.

Unit 7 Progress Check: FRQ

2. This question is a short free-response question. Show your work for each part of the question.

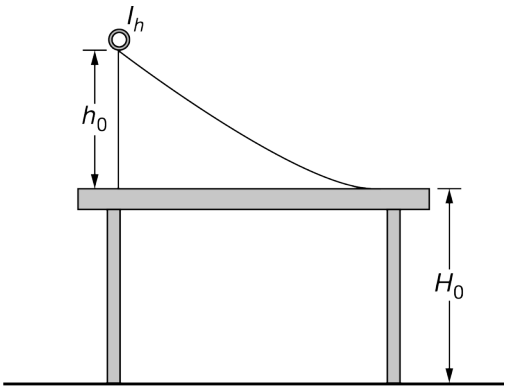

Figure 1

A ramp of height h_0 is placed on top of a table that has an edge that is a distance H_0 above the ground. A student places a hoop of rotational inertia I_h , mass m_0 , and radius r_0 at the top of the ramp, as shown in Figure 1. The hoop is released from rest and is allowed to freely roll down the ramp.

(a) The figure below represents the hoop as it travels along the ramp. Draw a force diagram that shows and labels the forces (not components) exerted on the hoop. To clearly indicate at which point on the hoop each force is exerted, draw each force as a distinct arrow starting on, and pointing away from, the point at which the force is exerted.
Note: Draw the relative lengths of all arrows to reflect the relative magnitudes of all the forces.

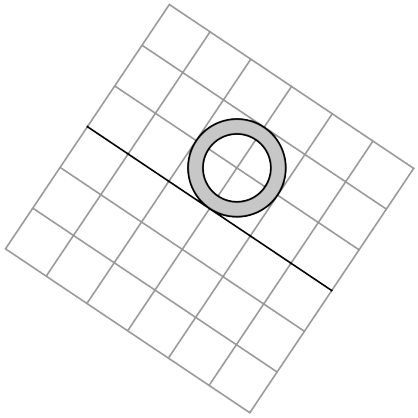

After it is released from rest, the hoop rolls down the ramp, launches horizontally off the edge of the table, and lands a horizontal distance D from the edge of the table. The situation is repeated, but the hoop is replaced with a solid disk of moment of inertia $I_h > I_d$, mass m_0 , and radius r_0 , as shown in Figure 2.

Unit 7 Progress Check: FRQ

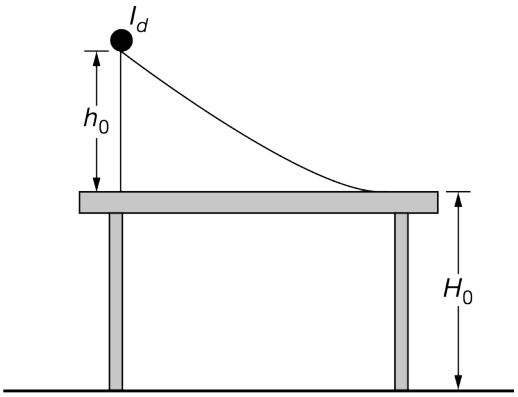

Figure 2

(b) In a clear, coherent paragraph-length response that may also contain figures and/or equations, predict which object, the hoop or the solid disk, if either, will travel a greater horizontal distance after each object is released from rest, rolls down the ramp, and is launched horizontally off the edge of the table. In your response, discuss the physical aspects of the hoop and disk that are similar and different, and how those differences affect the horizontal distance traveled.