Unit 7 Progress Check: FRQ

1. This question is a long free-response question. Show your work for each part of the question.

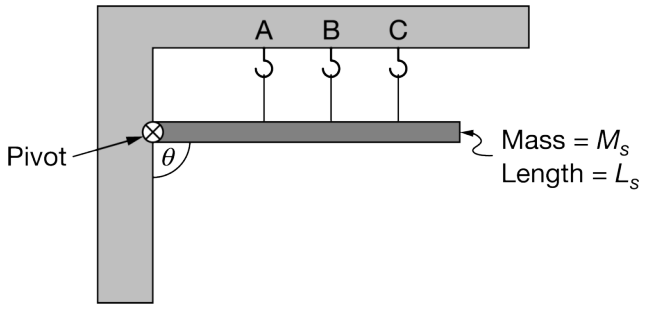

In their physics classroom, students want to hang a heavy sign of mass M_s and length L_s as shown in the figure above. The sign makes an angle θ with the wall. Without any support, the sign would rotate clockwise while its pivot would remain connected to the wall. The students can connect one support cable vertically from one of the hooks above the sign, as indicated by the dotted lines in the diagram.

(a) Rank the three hook locations according to the amount of tension the support cable would experience if the students decided to support the sign from that location. Use 1 for the least tension and 3 for the greatest tension. If two locations would have the same tension, give them the same ranking.

_____ Location A _____ Location B _____ Location C

Briefly explain your ranking.

(b) The students hang the sign with a cable, but the cable breaks and the sign rotates clockwise. The diagram below shows the sign at three different times as it is rotating.

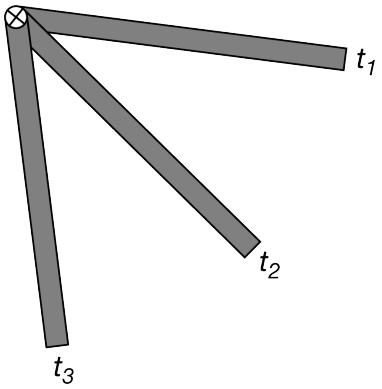

i. Indicate at which time, if any, the angular acceleration α of the sign is greatest, or whether it is the same at all three times.

_____ t_1

Unit 7 Progress Check: FRQ

_____ t_2

_____ t_3

_____ The angular acceleration is the same at t_1, t_2, and t_3.

Provide a physical explanation for your ranking.

ii. Show that α can be modeled with $\frac{3g\sin\theta}{2L_s}$. The rotational inertia of the sign is $I_s = \frac{1}{3}M_sL_s^2$.

(c) The students want to describe the angular velocity ω of the sign as it rotates, and they propose the following equation: $\omega\left(t\right) = \frac{3g\sin\theta}{2L_s}t$.
Regardless of whether or not this equation is correct, does this equation make physical sense?

Students attach a rotary motion sensor to the sign, record ω and θ, and create the graph of the magnitude of ω versus θ shown.

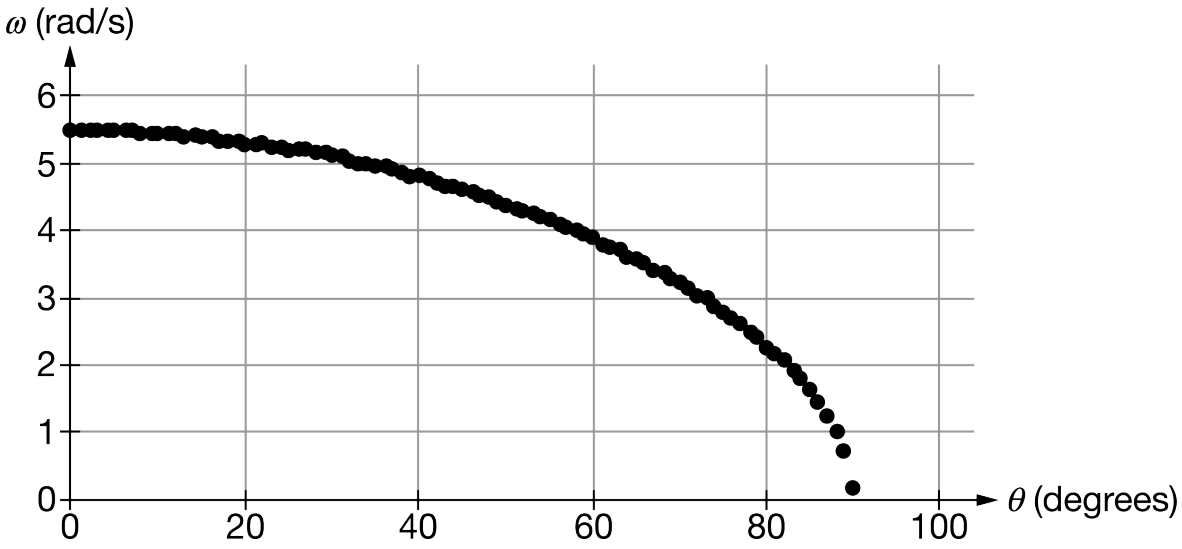

(d) Four students independently derive equations and propose them to describe the motion of the sign. Which equation best matches the data collected?

_____ $\omega(\theta) = \sqrt{\frac{3g\cos\theta}{L_s}}$

_____ $\omega(\theta) = \sqrt{\frac{3L_s\cos\theta}{g}}$

Unit 7 Progress Check: FRQ

_____ $\omega(\theta) = \sqrt{\frac{3g\sin\theta}{L_s}}$

_____ $\omega(\theta) = \sqrt{\frac{3L_s\sin\theta}{g}}$

Justify your answer by citing specific features of the graph.

Part (a)

Select a point value to view scoring criteria, solutions, and/or examples and to score the response.

0	1	2 ✓

Student response accurately includes one of the following criteria.

- ☐ 1 point is earned for indicating that for the sign to hang successfully that the sum of the torques on the rod must be zero.
- ☐ 1 point is earned for indicating that since torque is equal to $\tau = rF\sin\theta$, and each position must provide the same torque to balance the system, that the longest r value will produce the smallest necessary force to balance the system.

Example Response:

In order for the sign to hang successfully, the sum of the torques on the sign has to equal zero. Since the necessary torque from the cable needed is constant (equal in magnitude to the torque on the sign from the force of gravity), the way to get the smallest force is to use position C, which provides the biggest distance from the pivot $\tau = rF\sin\theta$.

Part (b) i

Select a point value to view scoring criteria, solutions, and/or examples and to score the response.

0	1	2 ✓

Student response accurately includes both of the following criteria.

Note: Students who choose either "t_2", "t_3", or "… the same at t_1, t_2, and t_3" can earn at most 1 point for their explanation.

- ☐ 1 point is earned for indicating that the angular acceleration depends on the net torque exerted on the sign.

Unit 7 Progress Check: FRQ

- [ ] 1 point is earned for making a claim that the net torque exerted on the sign decreases as the angle decreases.

Example response:

Once the cable breaks, the only torque on the sign is the torque from gravity. This torque is responsible for accelerating the sign. Although the force of gravity and the point of application of that force (the center of mass) remains constant, the angle between these two vectors decreases, causing the net torque, and hence the angular acceleration to decrease as the angle decreases.

Part (b) ii

Select a point value to view scoring criteria, solutions, and/or examples and to score the response.

0	1	2	3 ✓

Student response accurately includes three of the following criteria.

- [ ] 1 point is earned for use of Newton's second law in rotational form
- [ ] 1 point is earned for the correct substitution for torque
- [ ] 1 point is earned for the correct substitution for rotational inertia.

Example Response:

$\Sigma\tau = I_s\alpha$

$F_g\frac{L_s}{2}\sin\theta = I_s\alpha$

$\frac{M_s g L_s \sin\theta}{2} = \frac{1}{3}M_s L_s^2\alpha$

$\frac{g L_s \sin\theta}{2} = \frac{1}{3}L_s^2\alpha$

$\frac{g\sin\theta}{2} = \frac{1}{3}L_s\alpha$

$\frac{3g\sin\theta}{2L_s} = \alpha$

Part (c)

Select a point value to view scoring criteria, solutions, and/or examples and to score the response.

0	1	2 ✓

Student response accurately includes both of the following criteria.

- [ ] 1 point is earned for an indication that omega should get bigger, but then at some time t begin to get

Unit 7 Progress Check: FRQ

smaller.

- [ ] 1 point is earned for an indication that the provided equation shows that the maximum value of omega will increase.

Example Response:

This equation does not make physical sense. Since the rod will swing down and then back up, omega will get bigger, but then at some point will begin to get smaller. If the given equation were correct, the maximum value of omega would increase.

Part (d)

Select a point value to view scoring criteria, solutions, and/or examples and to score the response.

0	1	2	3 ✓

Student response accurately includes all of the following criteria.

Correct Answer: $\omega(\theta) = \sqrt{\frac{3g\cos\theta}{L_s}}$

- [ ] 1 point is earned for the choosing the correct equation that matches the graph with some attempt at justification
- [ ] 1 point is earned for stating that the units work out correctly to give units of radians/second when the fraction is $\frac{g}{L_s}$ under the radical.
- [ ] 1 point is earned for stating that on the graph, omega starts at zero and then increases, and the cosine of 90 degrees is zero, so the function matches the graph.

Example Response:

An equation equal to omega must have units of radians per second. Of the choices of equations, only the two choices with $\frac{g}{L_s}$ would give the correct units. Also, the graph starts at zero velocity (when the sign is first released) and as the angle approaches zero, the angular velocity approaches a maximum value. This is represented accurately by the cosine function.

Unit 7 Progress Check: FRQ

2. This question is a short free-response question. Show your work for each part of the question.

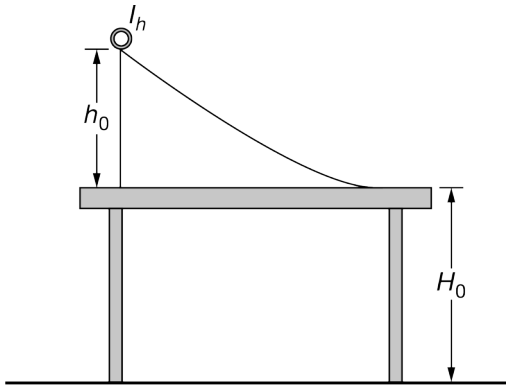

Figure 1

A ramp of height h_0 is placed on top of a table that has an edge that is a distance H_0 above the ground. A student places a hoop of rotational inertia I_h , mass m_0 , and radius r_0 at the top of the ramp, as shown in Figure 1. The hoop is released from rest and is allowed to freely roll down the ramp.

(a) The figure below represents the hoop as it travels along the ramp. Draw a force diagram that shows and labels the forces (not components) exerted on the hoop. To clearly indicate at which point on the hoop each force is exerted, draw each force as a distinct arrow starting on, and pointing away from, the point at which the force is exerted.
Note: Draw the relative lengths of all arrows to reflect the relative magnitudes of all the forces.

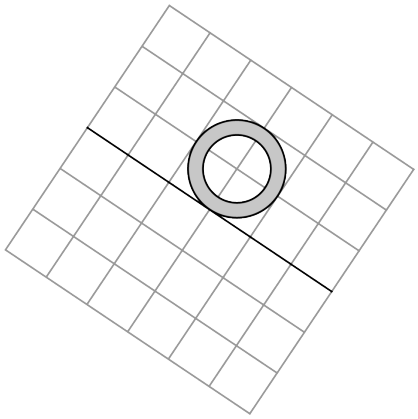

After it is released from rest, the hoop rolls down the ramp, launches horizontally off the edge of the table, and lands a horizontal distance D from the edge of the table. The situation is repeated, but the hoop is replaced with a solid disk of moment of inertia $I_h > I_d$, mass m_0 , and radius r_0 , as shown in Figure 2.

Unit 7 Progress Check: FRQ

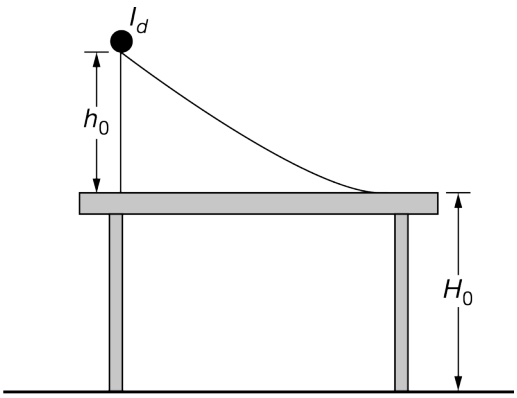

Figure 2

(b) In a clear, coherent paragraph-length response that may also contain figures and/or equations, predict which object, the hoop or the solid disk, if either, will travel a greater horizontal distance after each object is released from rest, rolls down the ramp, and is launched horizontally off the edge of the table. In your response, discuss the physical aspects of the hoop and disk that are similar and different, and how those differences affect the horizontal distance traveled.

Part(a)

Select a point value to view scoring criteria, solutions, and/or examples and to score the response.

0	1	2 ✓

Student response accurately includes both of the following criteria.

- [ ] 1 point is earned for drawing a force of friction that points upward and to the left along the length of the ramp, is applied to the edge of the hoop that is in contact with the ramp, and is smaller in magnitude (length) than the normal force.
- [ ] 1 point is earned for a downward force due to gravity that is exerted at the center of mass of the hoop, and for a normal force that points upward and to the right, and is perpendicular to the plane of the surface.

Example Response:

Unit 7 Progress Check: FRQ

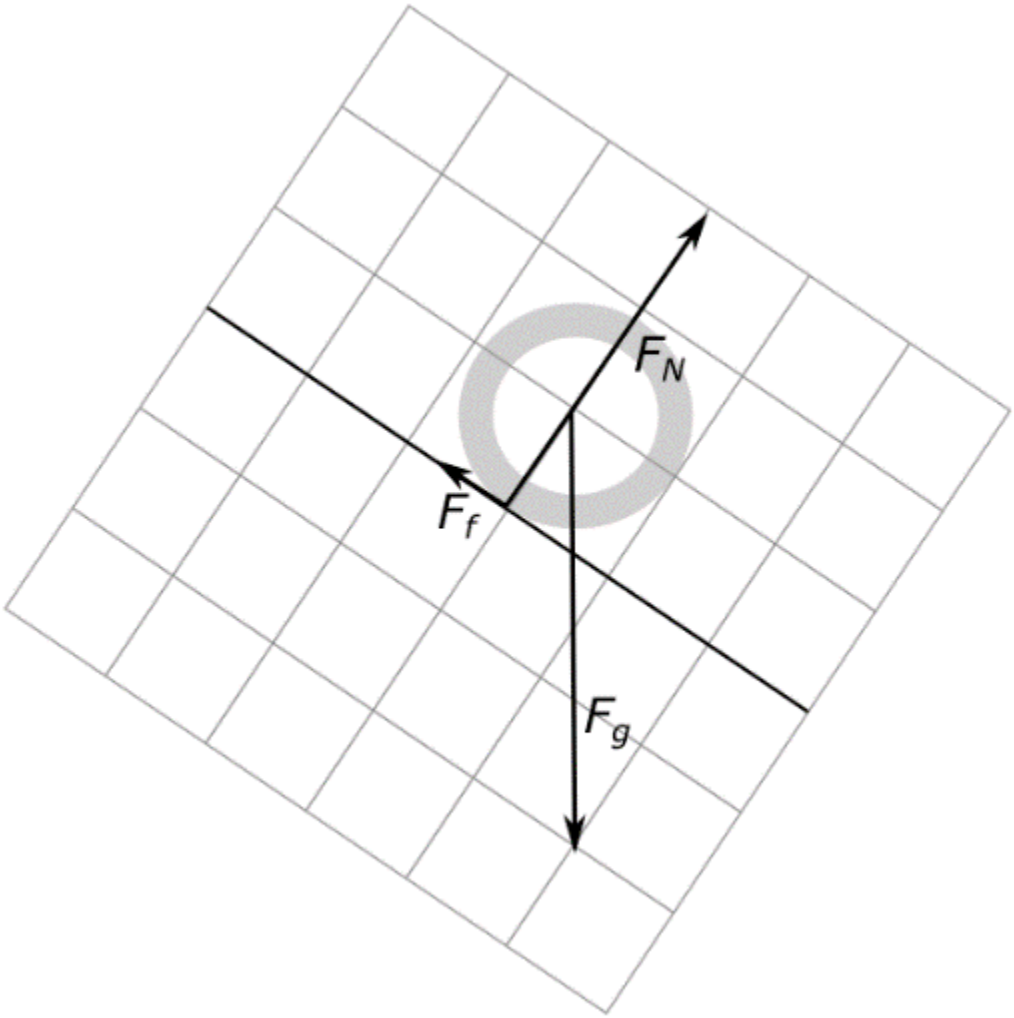

Note: The forces are not drawn to scale.

Part (b)

Select a point value to view scoring criteria, solutions, and/or examples and to score the response.

0	1	2	3	4	5 ✓

Student response accurately includes all of the following criteria.

- ☐ 1 point is earned for stating that the hoop and the disk have the same initial gravitational potential energy (initial mechanical energy), because both objects have the same height above the ground and have the same mass.
- ☐ 1 point is earned for stating either of the following about kinetic energy at the bottom of the ramp: the hoop will have a greater rotational kinetic energy because it has a greater moment of inertia than the disk, or that the disk will have a greater translational kinetic energy than the hoop because the disk has less

Unit 7 Progress Check: FRQ

rotational kinetic energy than the hoop.

- [ ] 1 point is earned for stating that both objects take the same amount of time to reach the floor after leaving the bottom of the ramp.
- [ ] 1 point is earned for stating that the disk will travel a greater horizontal distance than the hoop, because it has a greater translational speed than, and falls for the same amount of time as the hoop.
- [ ] 1 point is earned for a logical, relevant, and internally consistent argument that addresses the required argument or question asked, and follows the guidelines described in the published requirements for the paragraph-length response.

Example Response:

The hoop and the disk have the same mass and are released from rest at the same height above the ground. Therefore, the hoop and the disk have the same initial mechanical energy. After they are released from rest, the hoop and the disk will have the same kinetic energy at the bottom of the ramp. However, the disk has a greater rotational inertia than the hoop. This means that the disk will acquire more rotational kinetic energy than the hoop. This means that the hoop will have more translational kinetic energy than the disk when the hoop launches horizontally off of the table. Therefore, the hoop will travel a greater horizontal distance than the disk before both objects reach the ground.