chapter1partc

1. This question is a short free-response question. Show your work for each part of the question. (10 points, suggested time 15 minutes)

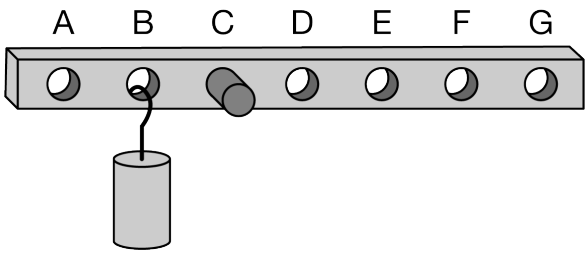

A uniform bar, of mass M, with seven evenly spaced holes is held by sliding the bar over a horizontal peg through one of the seven holes. The peg passes through hole C, and a cylinder hangs from a hook placed through hole B as shown above. The mass of the bar is equal to the mass of the cylinder, and the location of the center of mass of the bar is at the center of hole D. In this configuration, the bar-cylinder system remains motionless but is free to rotate around the peg in hole C. Frictional forces acting on the bar are negligible.

(a) Two additional cylinders, identical to the one shown, can each be hung on the bar by hooks from any of the open holes so that the bar will still be in rotational equilibrium when all three cylinders are hanging from it. From which two holes should the two cylinders be hung? Briefly explain your reasoning.

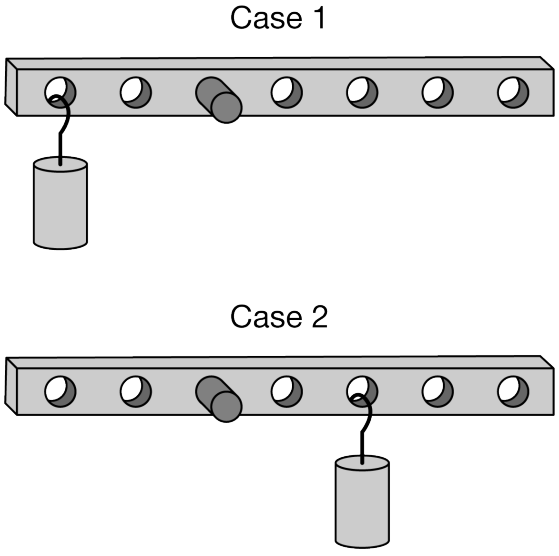

The cylinder is moved to hang from hole A as shown in Case 1 above. The bar is released, and its resulting angular acceleration is recorded. Then the cylinder is moved to hang from hole E, as shown in Case 2 above. Again, the bar is released, and its resulting angular acceleration is recorded.

(b) Is the magnitude of the initial angular acceleration of the bar-cylinder system in Case 1 larger than, smaller than, or equal to the magnitude of the initial angular acceleration of the bar-cylinder system in Case 2? In a clear, coherent, paragraph-length response, explain your reasoning.

chapter1partc

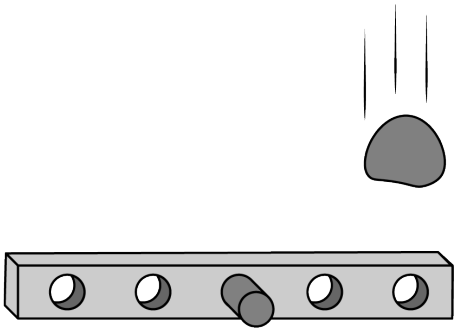

In a new scenario, a different uniform bar is held by a horizontal peg as shown above. The bar is initially motionless but is free to rotate around the peg with negligible friction. A ball of clay is dropped onto the bar in the position shown. The clay collides with and sticks to the bar.

(c) During this collision, is the linear momentum of the clay-bar system constant? Justify your answer.

(d) During this collision, is the angular momentum of the bar about an axis through the center of the bar constant? Justify your answer.

Part A

Select a point value to view scoring criteria, solutions, and/or examples and to score the response.

0	1	2 ✓

The response accurately includes **both** of the following criteria.

- ☐ 1 point is earned for identifying both holes, A and E.
- ☐ 1 point is earned for referring to balanced torque or saying that the sum of the torques is zero.

Example Response:

The two additional cylinders should be placed at holes A and E. In order to maintain equilibrium, the two additional cylinders must create the same magnitude torques but in opposite directions.

OR

By placing the cylinders at holes, A and E, the sum of the torques about the pivot point equals zero, maintaining equilibrium.

Part B

Select a point value to view scoring criteria, solutions, and/or examples and to score the response.

chapter1partc

0	1	2	3	4	5 ✓

The response accurately includes **all** of the following criteria.

- ☐ 1 point is earned for a claim that the system has greater angular acceleration in Case 2.
- ☐ 1 point is earned for identifying there is more net torque about the axis of rotation in Case 2.
  Note: A consistent explanation connecting the claim from the first point to the net torque earns this point. (i.e., an explanation that the angular acceleration is greater in Case 1 because the net torque is greater in Case 1, earns this point.)
- ☐ 1 point is earned for identifying that the rotational inertia of the bar-cylinder system about the peg is the same in both cases.
- ☐ 1 point is earned for correctly applying/describing Newton's second law in rotational form.
  Note: students are not required to derive any equations, this point is for indicating that the torque due to the bar's weight and the cylinder ADD in case 2, but subtract in case 1.
- ☐ 1 point is earned for a logical, relevant, and internally consistent argument that addresses the required argument or question asked, and follows the guidelines described in the published requirements for the paragraph-length response.

Example Response:

In both cases, the bar + cylinder have the same rotational inertia about the peg since their masses are the same and the distribution of this mass from the axis of rotation is the same. The net torque for case 2 is greater because the torque created by the cylinder adds to the torque created by the bar's weight. In case 1 the torque created by the cylinder and the torque created by the bar's weight subtract due to their locations on the bar. As a result of the greater torque with the same rotational inertia, case 2 will have a greater angular acceleration.

Part C

Select a point value to view scoring criteria, solutions, and/or examples and to score the response.

Correct answer: No. (Linear momentum is not constant)

0	1 ✓

The response accurately includes:

- ☐ 1 point is earned for a correct justification in terms of external forces.

Example Response:

No linear momentum is not constant because there is a net external force acting on the clay-bar system.

chapter1partc

Part D

Select a point value to view scoring criteria, solutions, and/or examples and to score the response.

0	1	2 ✓

The response accurately includes **both** of the following criteria.

- ☐ 1 point is earned for a correct answer that the angular momentum of the bar is not constant, with an attempt at a justification.
- ☐ 1 point is earned for indicating that there is an external torque on the bar exerted by the clay.

Example Response:

No, the angular momentum of the bar is not constant because there is an external torque applied to the bar from the clay.

chapter1partc

2. This question is a short free-response question. Show your work for each part of the question. (10 points, suggested time 15 minutes)

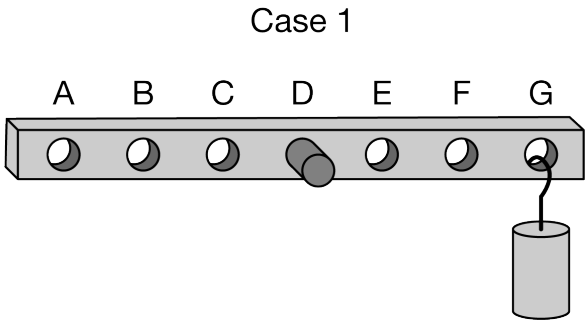

A uniform bar, of mass M, with seven evenly spaced holes is held by sliding the bar over a horizontal peg through one of the seven holes. The peg passes through hole D, and a cylinder hangs from a hook placed through hole G as shown above. The mass of the bar is the same as the mass of the cylinder, and the location of the center of mass of the bar is at the center of hole D. In this configuration, the bar-cylinder system is not in rotational equilibrium and is free to rotate about the peg in hole D. Frictional forces acting on the bar are negligible.

(a) Two additional cylinders, identical to the one shown, can each be hung on the bar by hooks from any of the open holes so that the bar will be in rotational equilibrium when all three cylinders are hanging from it. From which two holes should the two cylinders be hung? Briefly explain your reasoning.

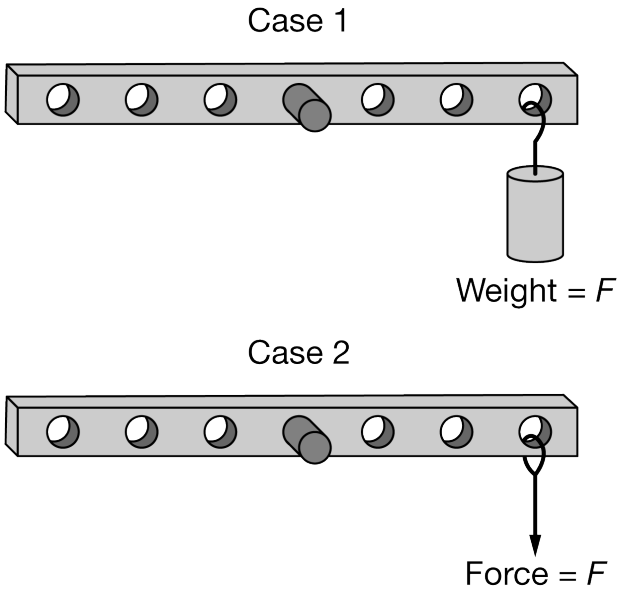

The bar is returned to its original setup, Case 1, in which the cylinder has weight F, as shown above. The bar is released, and its resulting angular acceleration is recorded. Then in Case 2, the weight is replaced by a string, as shown above. A downward force of magnitude F, equal to the weight of the hanging cylinder, is exerted on the string. The resulting angular acceleration of the bar is recorded.

(b) Is the magnitude of the initial angular acceleration of the bar-cylinder system in Case 1 larger than, smaller

chapter1partc

than, or equal to the magnitude of the initial angular acceleration of the bar in Case 2? In a clear, coherent, paragraph-length response, explain your reasoning.

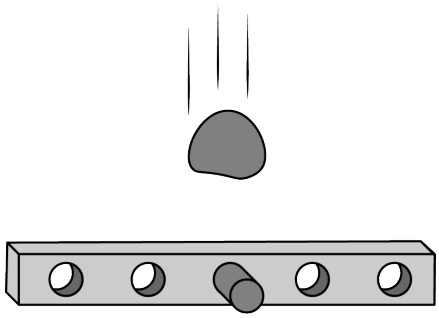

In a new scenario, a different uniform bar is held by a horizontal peg as shown above. The bar remains motionless but is free to rotate around the peg with negligible friction. A lump of clay is dropped onto the bar in the position shown. The clay collides with and sticks to the bar.

(c) During this collision, is the kinetic energy of the clay-bar system constant? Justify your answer.

(d) During this collision, is the angular momentum of the clay-bar system about an axis through the center of the bar constant? Justify your answer.

Part A

Select a point value to view scoring criteria, solutions, and/or examples and to score the response.

0	1	2 ✓

The response accurately includes **both** of the following criteria.

- ☐ 1 point is earned for identifying both holes B and C.
- ☐ 1 point is earned for referring to balanced torque or saying that the sum of the torques is zero.

Example Response:

The cylinders should be hung from B and C. The cylinder at G exerts a torque (about D) of (Mg)(3L), where L is the distance between adjacent holes. Cylinders at B and C would exert a torque in the opposite direction of $(Mg)(2L) + (Mg)(L) = 3MgL$*, for a net torque of zero as required.*

Part B

Select a point value to view scoring criteria, solutions, and/or examples and to score the response.

chapter1partc

0	1	2	3	4	5 ✓

The response accurately includes **all** of the following criteria.

- ☐ 1 point is earned for a claim that the system has greater angular acceleration in Case 2 than in Case 1.
- ☐ 1 point is earned for identifying there is the same net torque about the axis of rotation in both cases.
- ☐ 1 point is earned for identifying that the rotational inertia is less in Case 2.
- ☐ 1 point is earned for correctly applying/describing Newton's second law in rotational form.
- ☐ 1 point is earned for a logical, relevant, and internally consistent argument that addresses the required argument or question asked, and follows the guidelines described in the published requirements for the paragraph-length response.

Example Response:

Case 2 has a greater angular acceleration than case 1. Both cases have the same net torque on the system about the axis of rotation, because equal forces are applied at the same distance from the axis of rotation. However, Case 2 has less rotational inertia because it does not have the mass of the cylinder located at hole G. Case 2 will have a greater angular acceleration because angular acceleration is proportional to net torque, which is the same for both cases, and inversely proportional to rotational inertia, which is less for Case 2.

Part C

Select a point value to view scoring criteria, solutions, and/or examples and to score the response.

Correct answer: No. (Kinetic energy is not constant.)

0	1 ✓

The response accurately includes:

- ☐ 1 point is earned for a correct justification that mechanical energy is dissipated in an inelastic collision.

Example Response:

During the collision, kinetic energy is not constant because the collision between the bar and lump of clay is inelastic since the clay sticks to the bar.

Part D

Select a point value to view scoring criteria, solutions, and/or examples and to score the response.

chapter1partc

0	1	2 ✓

The response accurately includes **both** of the following criteria.

- ☐ 1 point is earned for a correct answer that the angular momentum of the clay-bar system is constant, with an attempt at a justification.
- ☐ 1 point is earned for indicating that angular momentum is zero before and after the collision, or that there are no external torques about the center of the bar.

Example Response:

Yes, the angular momentum of the clay-bar system is constant. There are no external torques acting on the clay-bar system about the center of the bar.

chapter1partc

3. This question is a short free-response question. Show your work for each part of the question. (10 points, suggested time 15 minutes)

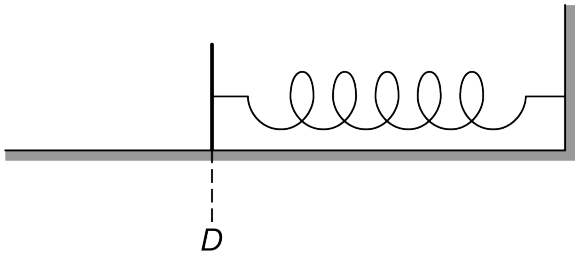

Figure 1. Spring at Relaxed Length

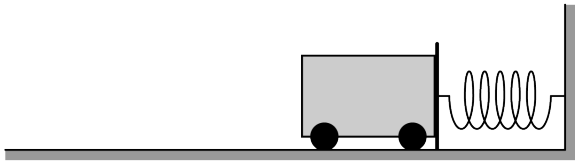

Figure 2. Cart Held Against Plate

Students intend to use a cart-spring system to study motion. A vertical plate with negligible mass is attached to a horizontal spring of spring constant k. When the spring is at its relaxed length, the plate is at position D as indicated in Figure 1 above. A cart is glued to the plate. The cart is initially held so that the spring is compressed as shown in Figure 2 above. The maximum force the glue can exert is $F_{\max}$. Assume friction is negligible.

The students plan to release the cart from rest so that the cart oscillates. They discuss whether the cart could detach from the plate during the cart's motion if the glue is not strong enough. One student makes the following claim:

"The cart could never detach from the plate because the cart and the plate exert equal and opposite forces on each other, so the forces on the cart add to zero."

(a) Which underlined phrase or phrases are ***correct***, if either? If neither phrase is ***correct***, write "none."

(b) Which underlined phrase or phrases are ***incorrect***, if either? If neither phrase is ***incorrect***, write "none."

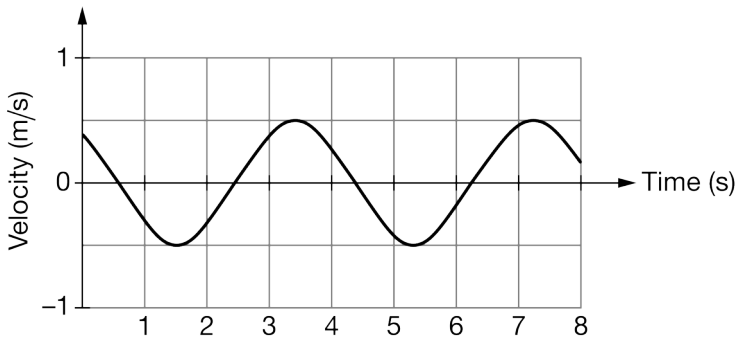

chapter1partc

The cart is removed, and the plate is coated with very strong glue. The cart rolls to the right with positive velocity v_{cart}, collides with and sticks to the plate, and then oscillates back and forth at the end of the spring. The graph above shows the velocity of the cart as a function of time after it has completed several oscillations.

(c) Explain how this graph could be used to find the maximum compression of the spring as it oscillates.

(d) The plate of negligible mass is replaced with a plate with mass similar to the cart's mass, and the collision is repeated. Again, the cart moves with velocity v_{cart}, collides with and sticks to the plate, and oscillates back and forth. In a clear, coherent paragraph-length response, explain how a graph of the cart's velocity as a function of time would differ from the one shown above if the plate's mass were not negligible. Provide a physical reason why each difference would occur.

Part A

Select a point value to view scoring criteria, solutions, and/or examples and to score the response.

0	1 ✓

The response accurately includes

- ☐ 1 point is earned for a correct statement and no incorrect statements.

Example Responses:

The student is correct in saying that the cart and the plate exert equal and opposite forces on each other.

OR

The first statement

Part B

Select a point value to view scoring criteria, solutions, and/or examples and to score the response.

0	1 ✓

The response accurately includes

- ☐ 1 point is earned for an incorrect statement and no correct statements.

Example Responses:

The student is incorrect in saying that the forces on the cart add to zero.

chapter1partc

OR

The second statement

Part C

Select a point value to view scoring criteria, solutions, and/or examples and to score the response.

0	1	2 ✓

The response accurately includes **both** of the following criteria.

- 1 point is earned for indicating that finding the area somewhere under the curve is needed
  OR
  indicating that energy is conserved during oscillation.
- 1 point is earned for indicating that the area for one quarter of a cycle is needed
  OR
  using $v_{\max}$ from the graph to solve for $x_{\max}$ by setting maximum kinetic energy equal to maximum spring potential energy.

Example Responses:

Take the area under the curve for a quarter of a period.

OR

Energy is conserved during the oscillation, therefore Kinetic Energy at equilibrium = Spring Potential energy at the extremes. By setting those 2 values equal to each other, and using the max velocity from the graph, we can solve for the maximum distance (x) and determine the maximum distance the spring is compressed.

Part D

Select a point value to view scoring criteria, solutions, and/or examples and to score the response.

0	1	2	3	4	5	6 ✓

The response accurately includes **all** of the following criteria.

- 1 point is earned for recognizing that the period would be different (not necessarily longer).
- 1 point is earned for indicating that the period would be longer because there is more mass.
- 1 point is earned for recognizing that kinetic energy is lost in an inelastic collision.
- 1 point is earned for a claim that the amplitude of the graph will different (not necessarily less).

chapter1partc

- [ ] 1 point is earned for indicating that the amplitude will be less because the total energy of the cart-plate-spring system is less
  OR
  indicating that the amplitude will be less because a greater mass means a smaller velocity because of conservation of momentum.
- [ ] 1 point is earned for a logical, relevant, and internally consistent argument that addresses the required argument or question asked, and follows the guidelines described in the published requirements for the paragraph-length response.

Example Response:

With an additional mass due to the plate, the period would be longer since period increases with mass. Some of the initial kinetic energy of the cart will be dissipated in the completely inelastic collision with the plate if the plate has nonzero mass, so there will be less kinetic energy immediately after the collision. With less kinetic energy at zero spring displacement, there is less total mechanical energy that can be converted to spring potential energy. So, the maximum spring potential energy will be less and therefore the amplitude will be less as well.

chapter1partc

4. This question is a short free-response question. Show your work for each part of the question. (10 points, suggested time 15 minutes)

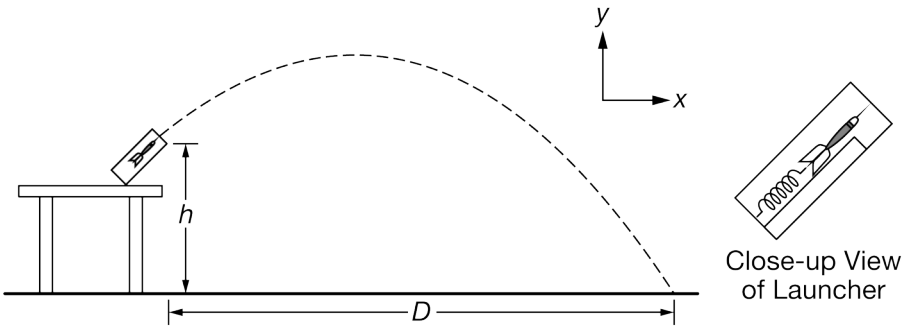

A launcher is used to launch a dart with initial speed v from a table at an angle, as shown above. The dart exits the end of the launcher at a height h above the floor and lands a horizontal distance D from the end of the launcher. A close-up view is included that shows the dart in the launcher immediately before being launched. Inside the launcher, the dart rests on a platform with negligible friction, and a compressed spring is released to push the dart out of the launcher. Assume air resistance is negligible.

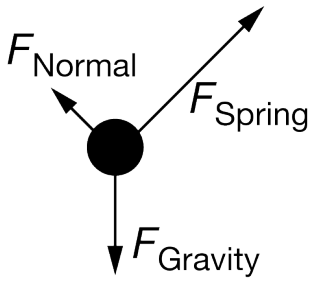

(a) A diagram of the forces exerted on the dart while it is being launched is shown above. Describe what changes would need to be made to the diagram to make it a correct diagram for the dart when it is in the air (after it has left the launcher but before it has reached the ground). Assume air resistance is negligible.

The three graphs shown below represent properties of the motion of the dart from the instant it is launched at time $t = 0$ until immediately before it hits the floor at time t_f.

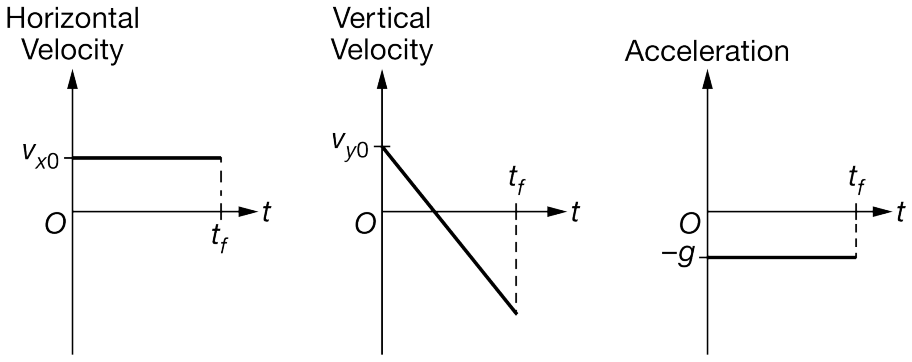

chapter1partc

(b) Assuming the values of v_{x0}, v_{y0}, t_f, and g are known, which of the above graphs could lead to a determination of the distance D, and how could a student use the chosen graph to determine D ?

(c) After the dart passes the highest point of its trajectory, the angle between the velocity vector of the dart and the horizontal (the x-axis) continues to increase until the dart strikes the ground. In a clear, coherent, paragraph-length response, explain the following:

- why the angle between the dart's velocity and the horizontal continues to increase and
- why, no matter how large the height h of the end of the launcher is, the angle between the dart's velocity and the horizontal can never be 90 degrees.

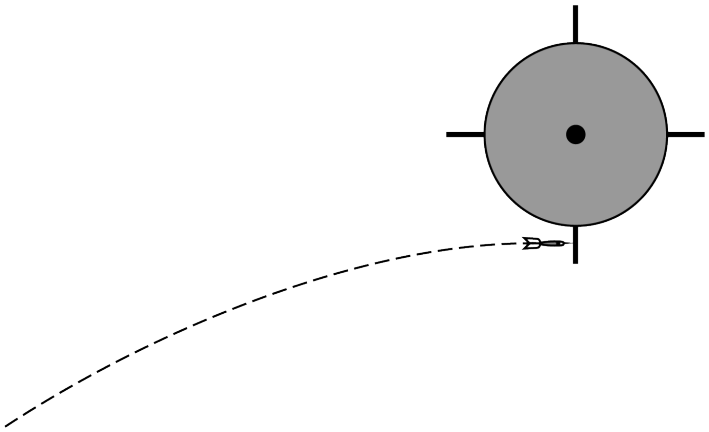

The dart is now launched so that it collides and sticks to a wheel at the instant its velocity is completely horizontal, as shown above. The wheel is free to rotate about a pivot at its center that has negligible friction.

(d) Indicate whether the linear momentum of the dart-wheel system will be constant during the collision. Justify your answer.

Part A

Select a point value to view scoring criteria, solutions, and/or examples and to score the response.

0	1 ✓

The response accurately includes

- [ ] 1 point is earned for indicating that the normal force and spring force would be removed.

Example Response:

When the dart is in the air, the normal force and the spring force should be removed from the diagram.

Part B

chapter1partc

Select a point value to view scoring criteria, solutions, and/or examples and to score the response.

0	1	2 ✓

The response accurately includes **both** of the following criteria.

- ☐ 1 point is earned for selecting the horizontal velocity graph.
- ☐ 1 point is earned for indicating area under the velocity graph can be used to find distance.

Example Response:

The students can determine the distance the dart travels horizontally by looking at the area under the horizontal velocity graph. This will be the horizontal displacement of the dart.

Part C

Select a point value to view scoring criteria, solutions, and/or examples and to score the response.

0	1	2	3	4	5 ✓

The response accurately includes **all** of the following criteria.

- ☐ 1 point is earned for indicating that the horizontal velocity component remains constant.
- ☐ 1 point is earned for indicating that the vertical velocity component increases.
- ☐ 1 point is earned for indicating that the resultant velocity is the vector sum of the two components (this point is for mentioning/evaluating the resultant, rather than the two individual components).
- ☐ 1 point is earned for explaining that the angle can never be 90 degrees because there is always a horizontal component (or for indicating that the velocity vector can never be totally vertical).
- ☐ 1 point is earned for a logical, relevant, and internally consistent argument that addresses the required argument or question asked, and follows the guidelines described in the published requirements for the paragraph-length response.

Example Response:

The horizontal component of the velocity remains constant because there is no acceleration in the horizontal direction. The vertical component of the velocity will increase. The total velocity is the vector sum of the two velocity components. Since there is always a horizontal component, the angle can never be 90 degrees, so the total velocity cannot ever be totally vertical.

Part D

Select a point value to view scoring criteria, solutions, and/or examples and to score the response.

chapter1partc

0	1	2 ✓

The response accurately includes **both** of the following criteria.

- ☐ 1 point is earned for indicating the linear momentum will not be constant, with an attempt at justification.
- ☐ 1 point is earned for indicating that there is an external force on the wheel (or that the dart will slow down and the wheel will have no net linear momentum).

Example Response:

The linear momentum of the system will not be constant because there is an external force on the wheel, exerted at the wheel axle.

chapter1partc

5. This question is a short free-response question. Show your work for each part of the question. (10 points, suggested time 15 minutes)

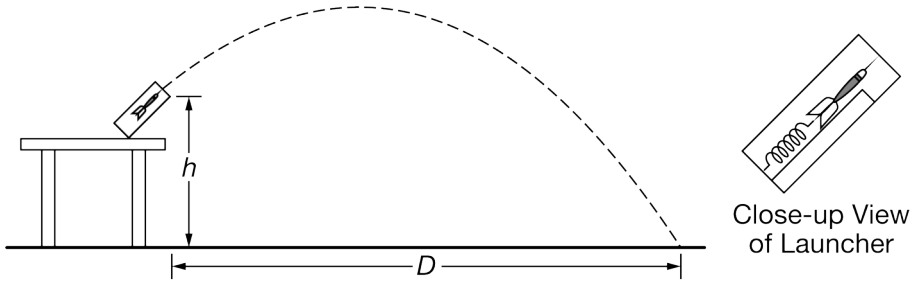

A launcher is used to launch a dart with initial speed v from a table at an angle, as shown above. The dart exits the end of the launcher at a height h above the floor and lands a horizontal distance D from the end of the launcher. A close-up view is included that shows the dart in the launcher immediately before being launched. Inside the launcher, the dart rests on a platform with negligible friction, and a compressed spring is released to push the dart out of the launcher. Assume air resistance is negligible.

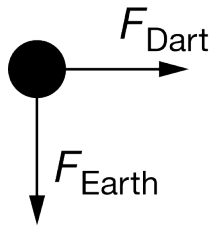

(a) A student creates the incorrect diagram shown above of the forces exerted on the dart at an instant in time after it has been launched but before it reaches the floor. Indicate what aspect of the diagram is incorrect. Assume air resistance is negligible.

A student produces the three possibly incorrect graphs shown below representing properties of the motion of the dart after it is launched.

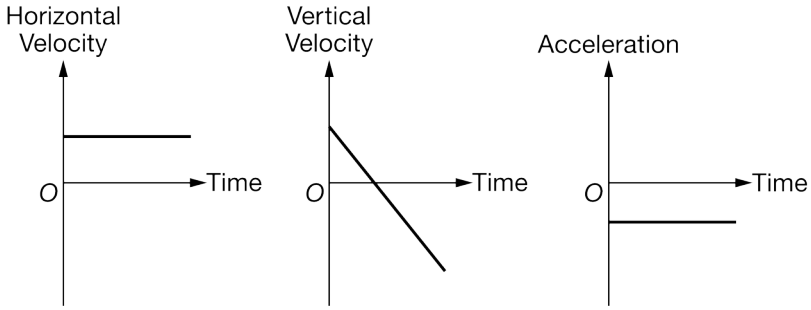

(b) Another student claims that the horizontal velocity graph is not correct because the dart is accelerating, and therefore the horizontal velocity is not constant. Is the student's claim valid? Justify your answer.

chapter1partc

(c) From the instant the dart is launched until it reaches the highest point in its trajectory, the magnitude of the dart's velocity decreases. In a clear, coherent, paragraph-length response, explain the following:

why the magnitude of the dart's velocity decreases until the dart reaches its highest point and
why the magnitude of the dart's velocity does not decrease to zero.

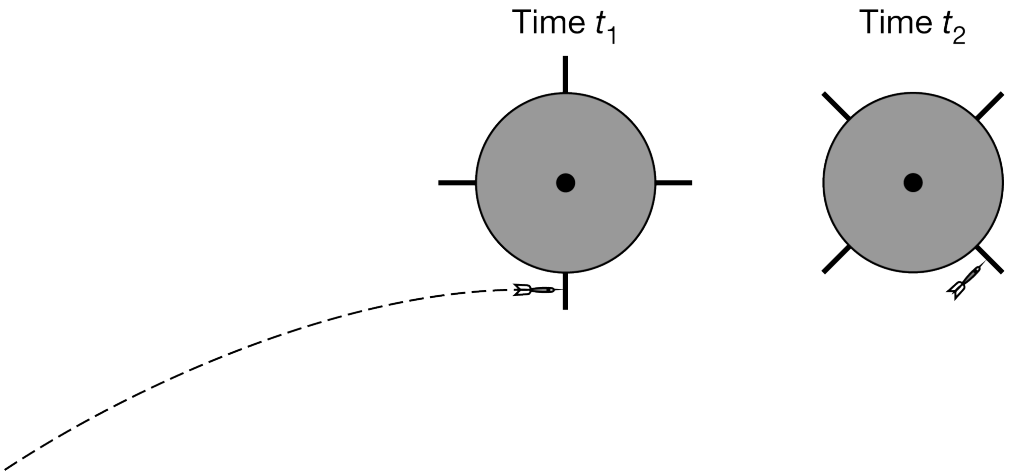

The dart is now launched so that it collides with and sticks to a wheel at time t_1, which is the instant the dart's velocity is completely horizontal, as shown above at left. The wheel is initially at rest and is free to rotate about a pivot at its center that has negligible friction. A short time later, at time t_2, the dart-wheel system is still rotating in a counterclockwise direction, as shown above at right.

(d) At time t_2, is the angular speed of the dart-wheel system about the pivot increasing, decreasing, or constant? Justify your answer.

Part A

Select a point value to view scoring criteria, solutions, and/or examples and to score the response.

0	1 ✓

The response accurately includes

- ☐ 1 point is earned for indicating the horizontal force should not be included.

Example Response:

There shouldn't be a horizontal force exerted on the dart.

Part B

Select a point value to view scoring criteria, solutions, and/or examples and to score the response.

chapter1partc

0	1	2 ✓

The response accurately includes **both** of the following criteria.

- ☐ 1 point is earned for indicating the claim is not valid, with an attempt at an explanation.
- ☐ 1 point is earned for indicating the acceleration or force is vertical, so the horizontal velocity does not change.
  OR
  For indicating that the acceleration or force is not horizontal, so the horizontal velocity does not change.

Example Response:

The claim is not valid. The acceleration is vertical only, so the horizontal velocity does not change.

Part C

Select a point value to view scoring criteria, solutions, and/or examples and to score the response.

0	1	2	3	4	5 ✓

The response accurately includes **all** of the following criteria.

- ☐ 1 point is earned for indicating that velocity has two components.
- ☐ 1 point is earned for indicating that the horizontal velocity component remains constant while vertical velocity component decreases.
- ☐ 1 point is earned for indicating that the resultant velocity decreases because it is the vector sum of the horizontal and vertical components (point is for mentioning/evaluating the resultant, rather than the two individual components).
- ☐ 1 point is earned for indicating that the magnitude cannot be zero because there is always a nonzero horizontal component.
- ☐ 1 point is earned for a logical, relevant, and internally consistent argument that addresses the required argument or question asked, and follows the guidelines described in the published requirements for the paragraph-length response.

Example Response:

The velocity includes both the horizontal and vertical components. The horizontal component stays constant while the vertical component decreases. So, the resultant velocity decreases because it is the resultant of the vertical and horizontal components. But the total velocity can never be zero since there is always a horizontal component that is nonzero.

Part D

chapter1partc

Select a point value to view scoring criteria, solutions, and/or examples and to score the response.

0	1	2 ✓

The response accurately includes **both** of the following criteria.

- ☐ 1 point is earned for indicating that the angular speed is decreasing, with an attempt at an explanation.
- ☐ 1 point is earned for indicating that there is a net torque exerted by the gravitational force on the dart, opposite the direction of rotation (or, clockwise).

Example Response:

The angular speed is decreasing because there is a net torque exerted by the gravitational force on the dart, opposite to the direction of the rotation.

chapter1partc

6. This question is a short free-response question. Show your work for each part of the question. (10 points, suggested time 15 minutes)

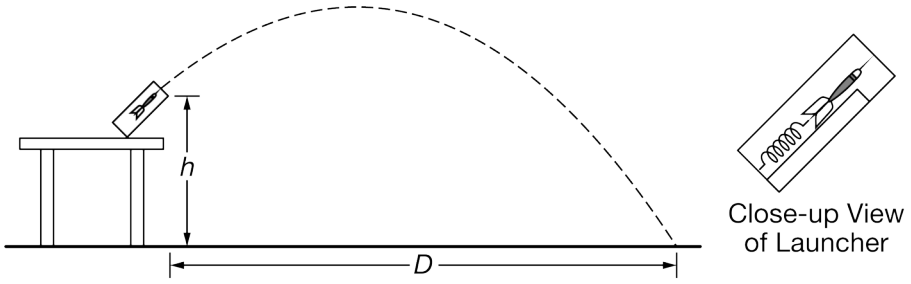

A launcher is used to launch a dart with initial speed v from a table at an angle, as shown above. The dart exits the end of the launcher at a height h above the floor and lands a horizontal distance D from the end of the launcher. A close-up view is included that shows the dart in the launcher immediately before being launched. Inside the launcher, the dart rests on a platform with negligible friction, and a compressed spring is released to push the dart out of the launcher. Assume air resistance is negligible.

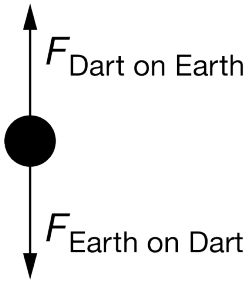

(a) A student creates the incorrect diagram shown above of the forces exerted on the dart at an instant in time after it has been launched but before it reaches the floor. Indicate what aspect of the diagram is incorrect. Assume air resistance is negligible.

The three graphs shown below represent properties of the motion of the dart from the instant it is launched at time $t = 0$ until immediately before it hits the floor at time t_f.

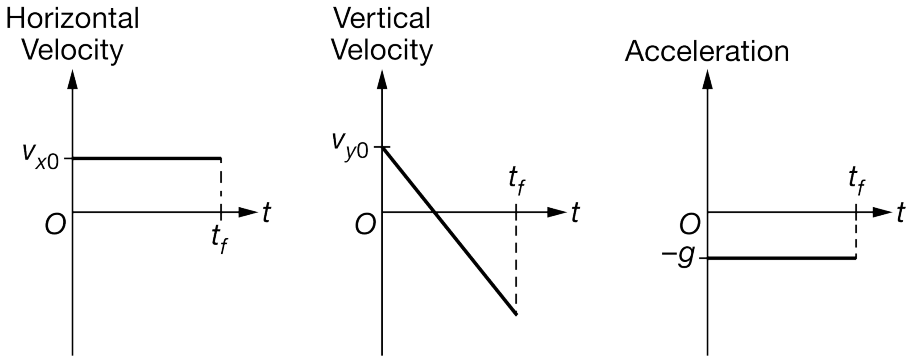

chapter1partc

(b) Assuming the values of v_{x0}, v_{y0}, t_f, and g are known, which of the above graphs could lead to a determination of the height h, and how could a student use the chosen graph to determine h ?

(c) After the dart passes the highest point of its trajectory, the angle between the velocity vector of the dart and the acceleration vector of the dart decreases until the dart strikes the ground. In a clear, coherent, paragraph-length response, explain the following:

- why the angle between the dart's velocity and acceleration continues to decrease and
- why, no matter how large the height h of the end of the launcher is, the angle between the dart's velocity and acceleration can never reach zero degrees.

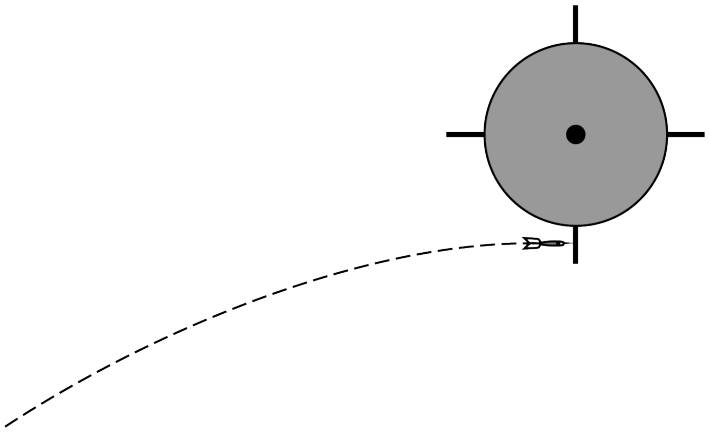

The dart is now launched so that it collides and sticks to a wheel at the instant its velocity is completely horizontal, as shown above. The wheel is free to rotate about a pivot at its center that has negligible friction.

(d) Indicate whether the angular momentum of the dart-wheel system about the pivot will be constant during the collision. Justify your answer.

Part A

Select a point value to view scoring criteria, solutions, and/or examples and to score the response.

0	1 ✓

The response accurately includes

- ☐ 1 point is earned for indicating the force exerted by the dart on Earth should not be included.

Example Response:

The force of the dart on Earth does not belong on a free-body diagram of the dart.

Part B

chapter1partc

Select a point value to view scoring criteria, solutions, and/or examples and to score the response.

0	1	2 ✓

The response accurately includes **both** of the following criteria.

- ☐ 1 point is earned for selecting the vertical velocity graph.
- ☐ 1 point is earned for indicating area under the velocity graph can be used to find *h*.

Example Response:

The vertical velocity graph can be used to find h. The total area under the curve on the vertical velocity graph will be the vertical displacement of the dart. The absolute value of this area is equal to h.

Part C

Select a point value to view scoring criteria, solutions, and/or examples and to score the response.

0	1	2	3	4	5 ✓

The response accurately includes **all** of the following criteria.

- ☐ 1 point is earned for indicating that the acceleration is downward.
- ☐ 1 point is earned for indicating that the vertical velocity component increases while the horizontal velocity component remains constant.
- ☐ 1 point is earned for a statement that the resultant velocity is the vector sum of the two components (this point is for mentioning/evaluating the resultant, rather than the two individual components).
- ☐ 1 point is earned for explaining that the angle can never be zero degrees since there is always a horizontal component (or for indicating that the velocity vector can never be totally vertical).
- ☐ 1 point is earned for a logical, relevant, and internally consistent argument that addresses the required argument or question asked, and follows the guidelines described in the published requirements for the paragraph-length response.

Example Response:

The acceleration of the dart is downward and constant, equal in magnitude to g. The vertical velocity increases, while the horizontal velocity remains constant because there is no acceleration in the horizontal direction. The total velocity is the vector sum (using the Pythagorean theorem) of the two velocities. Therefore, the angle can never be zero, since there is always a horizontal component.

Part D

Select a point value to view scoring criteria, solutions, and/or examples and to score the response.

chapter1partc

0	1	2 ✓

The response accurately includes **both** of the following criteria.

- ☐ 1 point is earned for indicating the angular momentum will be constant, with an attempt at justification.
- ☐ 1 point is earned for indicating that there is no net torque on the system.

Example Response:

The angular momentum is constant since there is no net torque on the system.

chapter1partc

7. This question is a short free-response question. Show your work for each part of the question. (10 points, suggested time 15 minutes)

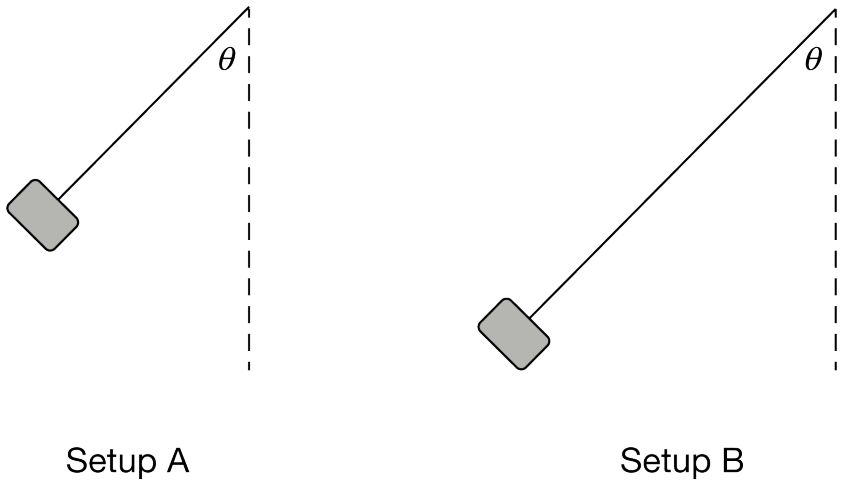

Note: Figure not drawn to scale.

Students construct two experimental setups A and B, as shown above. Each setup consists of a small block of known mass M attached to a string of negligible mass, where the string in setup A is shorter than the string in setup B. The tops of the strings are fixed in place. The blocks are held so that the strings make an angle θ (theta) with the vertical. The blocks are then released from rest.

(a) The angular momentum of an object of mass m moving with speed v in a circle of radius r has a magnitude of mvr about the center of the circle. When the blocks are in motion and the strings are instantaneously vertical, is the magnitude of the angular momentum about the fixed end of the string greater for the block in setup A, greater for the block in setup B, or the same for both blocks?

(b) In a clear, coherent, paragraph-length response, explain your reasoning for your response to part (a).

chapter1partc

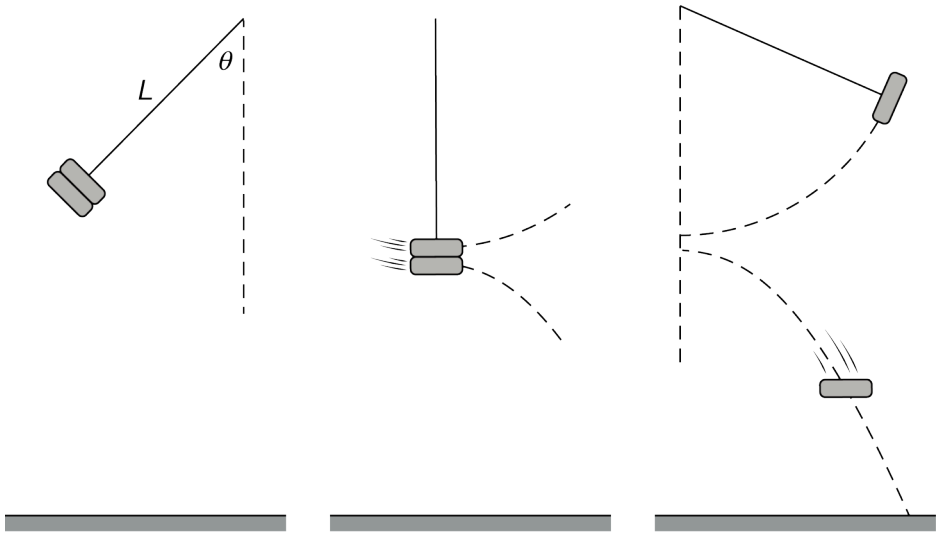

Note: Figures not drawn to scale.

Another experimental setup is created, this time with two blocks of equal mass that are taped together, as shown above at left. At the instant the string is vertical, as shown above center, the tape fails and the bottom block separates from the top block and falls to the floor. The top block is still attached to the string and reaches the highest point of its swing before the bottom block reaches the floor, as shown above at right.

(c) For the blocks-Earth system, is the total mechanical energy of the system the same immediately after the blocks are released as it is when the top block first reaches the highest point of its swing? Briefly explain your reasoning.

(d) Consider the top block and assume the size of the blocks is small compared to the length of the string so that the center of mass of the top block is not appreciably different from the center of mass of the original two blocks. Indicate which of the following time intervals is longer, if either. If the intervals are the same, write “the same.” Briefly explain your reasoning.

Interval 1: The time interval from when the blocks are initially released to when the string is vertical
Interval 2: The time interval from when the string is vertical to when the top block reaches the highest point of its swing

Part A

Select a point value to view scoring criteria, solutions, and/or examples and to score the response.

0	1 ✓

The response accurately includes:

- ☐ 1 point is earned for indicating that the angular momentum is greater for Setup B.

chapter1partc

Part B

Select a point value to view scoring criteria, solutions, and/or examples and to score the response.

0	1	2	3	4	5 ✓

The response accurately includes **all** of the following criteria.

- ☐ 1 point is earned for indicating that a longer string means a greater change in height (or gravitational potential energy).
- ☐ 1 point is earned for indicating that a greater change in height (or gravitational potential energy) means more kinetic energy (or faster speed).
- ☐ 1 point is earned for an attempt to use the expression mvr to compare the angular momenta of the two blocks.
- ☐ 1 point is earned for indicating that both r (or L) and v are larger for the block on the longer string.
- ☐ 1 point is earned for a logical, relevant, and internally consistent argument that addresses the required argument or question asked, and follows the guidelines described in the published requirements for the paragraph-length response.

Example Response:

The angular momentum will be greater in setup B. Since there is a longer string in B, the block has a greater change in height and therefore the block-Earth system has a greater change in potential energy and the block has a greater kinetic energy at the bottom of its swing. Since the block's speed is greater in B, and the string length is longer, the angular momentum MvL is greater in setup B.

Part C

Select a point value to view scoring criteria, solutions, and/or examples and to score the response.

0	1	2 ✓

The response accurately includes **both** of the following criteria.

- ☐ 1 point is earned for indicating "yes," with an attempt at an explanation.
- ☐ 1 point is earned for a correct explanation in terms of external force or work.

Example Response:

There are no external forces that do work on this system.

Part D

chapter1partc

Select a point value to view scoring criteria, solutions, and/or examples and to score the response.

0	1	2 ✓

The response accurately includes **both** of the following criteria.

- ☐ 1 point is earned for indicating “The same”.
- ☐ 1 point is earned for correct explanation that the mass of a pendulum bob does not affect the period.

Example Response:

The time intervals are the same because the period of the pendulum is only affected by the length and the gravitational field strength, not the mass.

chapter1partc

8. This question is a short free-response question. Show your work for each part of the question. (10 points, suggested time 15 minutes)

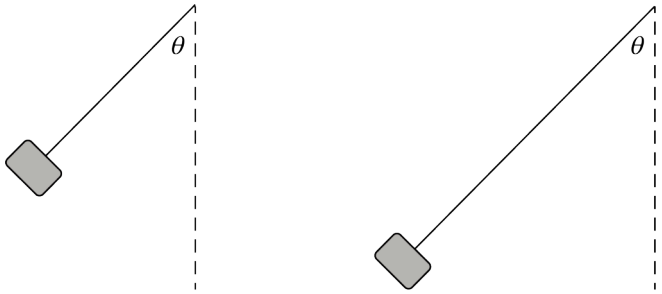

Setup A Setup B

Note: Figures not drawn to scale.

Students construct two experimental setups A and B, as shown above. Each setup consists of a small block of known mass M attached to a string of negligible mass, where the string in setup A is shorter than the string in setup B. The tops of the strings are fixed in place. The blocks are held so that the strings make an angle θ (theta) with the vertical. The blocks are then released from rest.

(a) Consider the instant in each block's motion when the string is vertical. Is the speed of the block at this instant greater for setup A, greater for setup B, or the same for both setups?

(b) The acceleration is the same for both blocks when the strings are vertical. In a clear, coherent, paragraph-length response, do the following.

Explain your reasoning for your response to part (a).
Explain why the acceleration could be the same for both blocks when the strings are vertical.

You do not need to show mathematically that the accelerations are equal. You only need to provide reasoning for why they could be equal.

chapter1partc

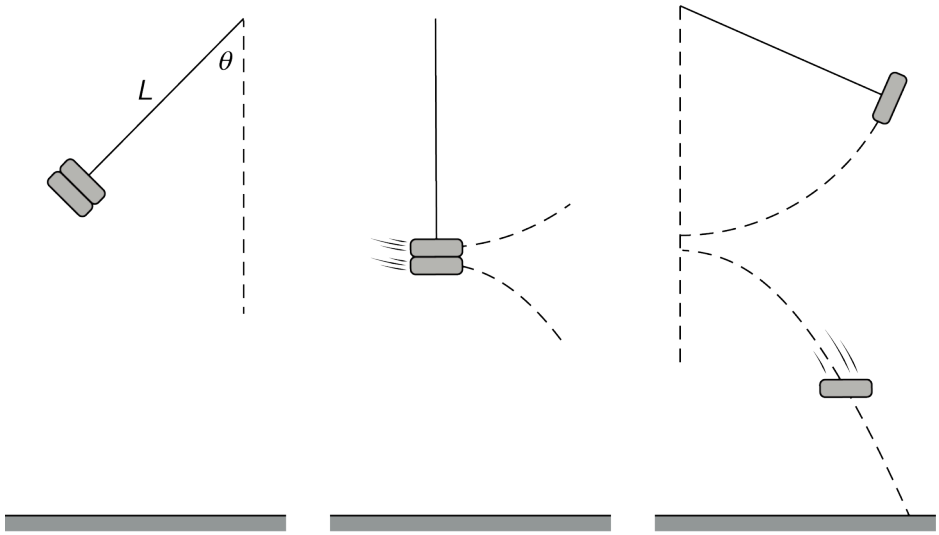

Note: Figures not drawn to scale.

Another experimental setup is created, this time with two blocks of equal mass that are taped together, as shown above at left. When the string is vertical, as shown above center, the tape fails and the bottom block separates from the top block and falls to the floor. The top block is still attached to the string and reaches the highest point of its swing before the bottom block reaches the floor, as shown above at right.

(c) For the system consisting of the two blocks only, and not Earth, in which of the following time intervals, if any, is the total mechanical energy of the system the same at the beginning and end of the interval? Be sure to indicate all time intervals that apply, or to write "none" if none of the time intervals apply. Briefly explain your reasoning.

Interval A: Immediately after the blocks are released to immediately before the tape fails
Interval B: Immediately before the tape fails to immediately after the tape fails
Interval C: Immediately after the tape fails to the instant the top block reaches its maximum height

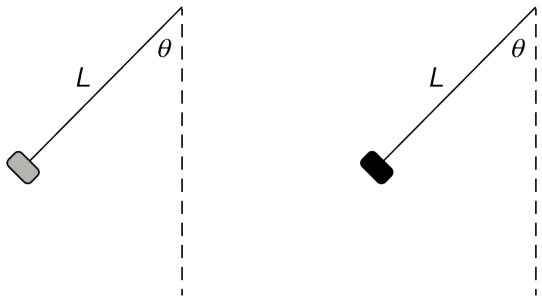

Note: Figures not drawn to scale.

Now two experimental setups are constructed that use strings of the same length and blocks of different masses. The strings are at the same initial angle from the vertical when each block is released, as shown above. The two setups are at the same height above the floor.

chapter1partc

This time, the string in each experiment breaks when it is vertical, as shown below in the middle figure for one experiment. Each block then falls to the floor, as shown at right below.

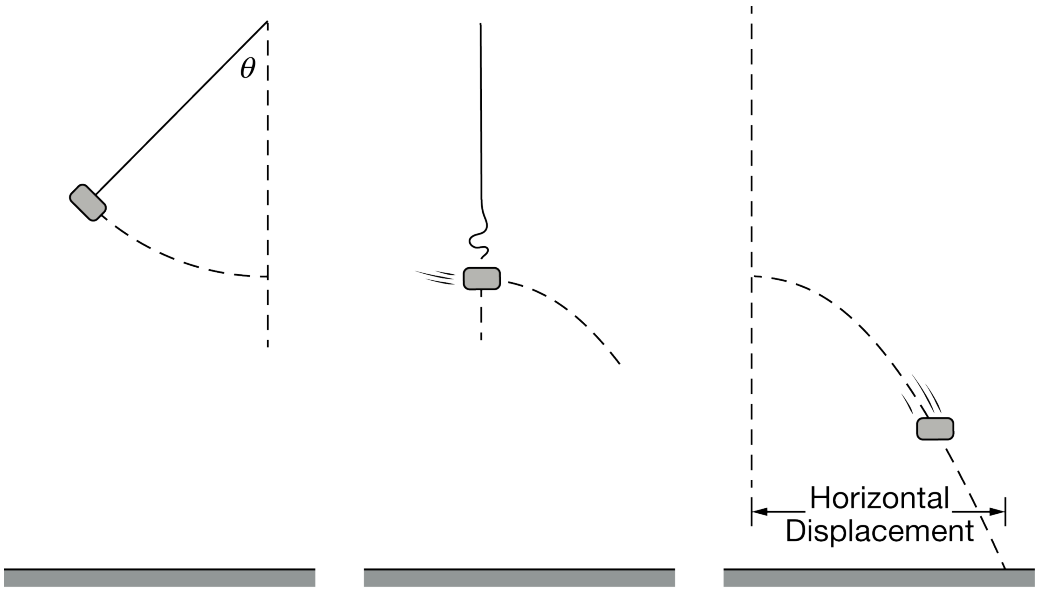

Note: Figures not drawn to scale.

(d) Is the horizontal displacement, from where the string breaks to where the block hits the floor, greater for the lighter block, greater for the heavier block, or the same for both blocks? Briefly explain your reasoning.

Part A

Select a point value to view scoring criteria, solutions, and/or examples and to score the response.

0	1 ✓

The response accurately includes:

- ☐ 1 point is earned for indicating that the speed is greater for setup B.

Part B

Select a point value to view scoring criteria, solutions, and/or examples and to score the response.

0	1	2	3	4	5 ✓

chapter1partc

The response accurately includes **all** of the following criteria.

- 1 point is earned for indicating that, with a longer string, there's a larger height (and/or change in height and/or gravitational potential energy.
- 1 point is earned for indicating that for a longer string, there is more kinetic energy at the bottom, so the block is moving faster.
- 1 point is earned for any indication that the mass is in circular motion which may include the mention of centripetal force, centripetal acceleration or the expression v^2/r.
- 1 point is earned for indicating that a faster block means a larger numerator in v^2/r
  AND a longer string means a larger denominator in v^2/r *resulting in* the same acceleration for A and B when the string is vertical.
  OR
  Reasoning consistent with other statements about speed comparison.
- 1 point is earned for a logical, relevant, and internally consistent argument that addresses the required argument or question asked in the first OR second bullet, and follows the guidelines described in the published requirements for the paragraph-length response.

Example Response:

The speed is greater in setup B. Since there is a longer string in B, the block has a greater change in height and therefore the block-Earth system has a greater change in potential energy, and the block has a greater kinetic energy and speed at the bottom of its swing in B. The acceleration v^2/L could be the same for both setups since setup B, with a longer string length L, also has a larger block speed v.

Part B – Alternate solution using tangential acceleration or force

Select a point value to view scoring criteria, solutions, and/or examples and to score the response.

0	1	2	3	4	5 ✓

The response accurately includes **all** of the following criteria.

- 1 point is earned for indicating that the acceleration (or force) is the same for both A and B.
- 1 point is earned for indicating that the acceleration (or force) acts for a longer time or distance or arc length for B so the speed is greater for the longer string when it is vertical.
- 1 point is earned for any indication that the mass is in circular motion, which may include the mention of centripetal force, centripetal acceleration or the expression v^2/r.
- 1 point is earned for indicating that a faster block means a larger numerator in v^2/r AND a longer string means a larger denominator (v^2/r with longer L) resulting in the same acceleration for A and B when the string is vertical.
  OR
  For indicating reasoning consistent with other statements about speed comparison.
- 1 point is earned for a logical, relevant, and internally consistent argument that addresses the required argument or question asked in the first OR second bullet, and follows the guidelines described in the published requirements for the paragraph-length response.

chapter1partc

Part C

Select a point value to view scoring criteria, solutions, and/or examples and to score the response.

Note: The second point is still earned if the explanation for B is correct even if the response incorrectly lists other intervals.

0	1	2 ✓

The response accurately includes **both** of the following criteria.

- ☐ 1 point is earned for only writing Interval B.
- ☐ 1 point is earned for a correct explanation in terms of kinetic energy or work or the speed not changing during interval B.

Example Response:

Only interval B because there is no change in speed (or kinetic energy) in that interval because it is so short.

Part D

Select a point value to view scoring criteria, solutions, and/or examples and to score the response.

Correct answer: The horizontal displacements are the same.

0	1	2 ✓

The response accurately includes **both** of the following criteria.

- ☐ 1 point is earned for indicating that the velocity or horizontal component of velocity is the same when the strings break.
- ☐ 1 point is earned for indicating that the blocks fall for equal amounts of time because they fall the same height.

Example Response:

The horizontal displacements are the same because the horizontal components of the velocities when the strings break are equal, and they fall for equal times because they fall from the same height.

Note: If the conclusion about displacement is incorrect, the response earns a maximum of 1 point for part (d).

chapter1partc

9. This question is a short free-response question. Show your work for each part of the question. (10 points, suggested time 15 minutes)

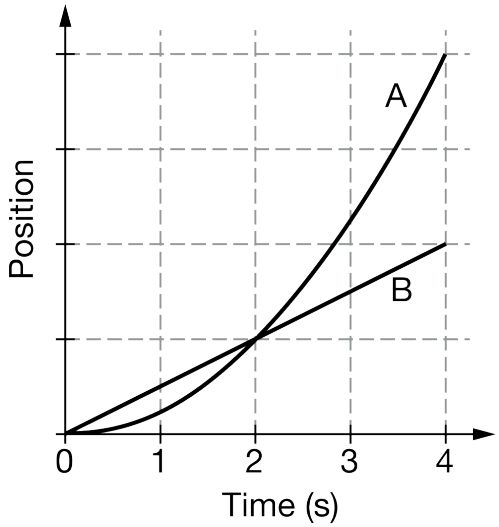

Two identical objects, A and B, move along straight, parallel, horizontal tracks. The graph above represents the position as a function of time for the two objects.

(a) At a time of 2 seconds, where the lines intersect, do the displacements of the two objects from their initial positions have the same magnitude? Briefly explain your answer.

(b) At a time of 2 seconds, where the lines intersect, do the velocities of the two objects have the same magnitude? Briefly explain your answer.

(c) At a time of 2 seconds, where the lines intersect, which object, if either, has a net force with a greater magnitude exerted on it? If the net force has the same magnitude for both objects, indicate this explicitly.

(d) In a clear, coherent paragraph-length response, explain your response to part (c). Be sure to reference and compare the graphed information for both objects A and B.

Part A

Select a point value to view scoring criteria, solutions, and/or examples and to score the response.

0	1	2 ✓

The response accurately includes **both two** of the following criteria.

- ☐ 1 point is earned for a statement that the two objects have the same displacement at 2 seconds.
- ☐ 1 point is earned for a justification that the lines represent position; and where they intersect, the objects

chapter1partc

are in the same place and began at the same place.

Example Response:

Since this graph is a position vs. time graph, and both objects start at the same position, and at $t = 2\ seconds$ *are at the same position, and displacement is equal to the change in position, both objects have the same displacement.*

Part B

Select a point value to view scoring criteria, solutions, and/or examples and to score the response.

0	1	2 ✓

The response accurately includes **both two** of the following criteria.

- ☐ 1 point is earned for a statement that the two objects have different velocities or speeds at 2 seconds.
- ☐ 1 point is earned for a justification that the velocities are represented by the slope of the position vs. time graph, and at $t = 2$ s the slope of the lines are different, so the objects have different velocities.

Example Response:

Since this graph is a position vs. time graph, the slope of the position vs. time graph represents the velocity of each object. At $t = 2$ s *the slopes have different values, so the velocities are different.*

Part C

Select a point value to view scoring criteria, solutions, and/or examples and to score the response.

0	1 ✓

The response accurately includes

- ☐ 1 point is earned for a statement that a greater net force is exerted on object A.

Example Response:

A greater net force is exerted on object A.

Part D

Select a point value to view scoring criteria, solutions, and/or examples and to score the response.

chapter1partc

0	1	2	3	4	5 ✓

The response accurately includes **all** of the following criteria.

- ☐ 1 point is earned for a statement that the net force exerted on an object is proportional to the acceleration (or $\Sigma F = ma$).
- ☐ 1 point is earned for a justification that since the position vs. time for object B is a straight line with a constant slope (so speed is constant), the acceleration is zero and so it has a zero net force exerted on it.
- ☐ 1 point is earned for a statement that since the position vs. time for object A has a changing slope, its velocity is changing.
- ☐ 1 point is earned for a statement that since object A's velocity is changing it has a non-zero acceleration, and hence has a net force exerted on it.
- ☐ 1 point is earned for a logical, relevant, and internally consistent argument that addresses the required argument or question asked, and follows the guidelines described in the published requirements for the paragraph-length response.

Example Response:

Since this graph is of position vs. time, the slope of the graph represents velocity. For object B, the slope is constant showing that the velocity of object B is constant, meaning that the acceleration is zero and also the net force exerted on object B is also zero. The slope of the position vs. time for object A is changing, which means that the velocity vs. time is changing, so the acceleration is non-zero which means that the net force is also non-zero because the net force exerted on the object is proportional to the acceleration. So, object A has the larger net force exerted on it.

chapter1partc

10. This question is a short free-response question. Show your work for each part of the question. (10 points, suggested time 15 minutes)

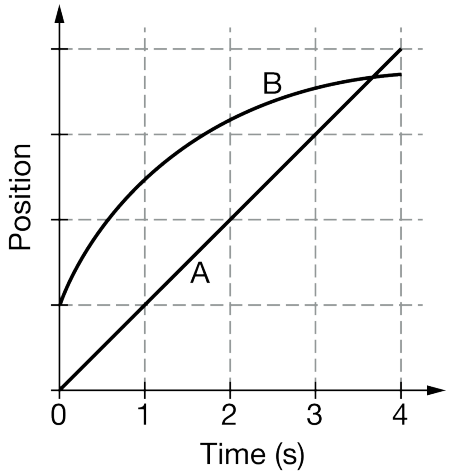

Two identical objects, A and B, move along straight, parallel, horizontal tracks. The graph above represents the position as a function of time for the two objects.

(a) At approximately which time or times, if any, are the objects moving at the same speed? If the objects are never moving with the same speed during the interval shown, indicate this explicitly. Briefly explain your answer.

(b) Describe what is happening to the positions of objects A and B between 3 seconds and 4 seconds.

(c) Which object, if either, has an acceleration with a greater magnitude during the time interval shown in the graph? If the accelerations have the same magnitude for both objects, indicate this explicitly.

(d) In a clear, coherent, paragraph-length response, explain your response to part (c). Be sure to reference and compare the graphed information for both objects A and B.

Part A

Select a point value to view scoring criteria, solutions, and/or examples and to score the response.

0	1	2 ✓

The response accurately includes **both** of the following criteria.

- ☐ 1 point is earned for a statement that the two objects are moving at the same speed at some time between 0.5 and 1.5 seconds
- ☐ 1 point is earned for a justification that includes that the two objects have the same speed when the slopes of the position vs. time graphs are the same

chapter1partc

Example Response:

The two objects are moving at the same speed at $t = 1$ s, where the slopes of the two position vs. time graphs are the same

Part B

Select a point value to view scoring criteria, solutions, and/or examples and to score the response.

Note: If the student does not address the intersection of the lines at all, a statement that explains that both objects increase their position in the positive direction between 3 and 4 seconds would earn a maximum of 1 point

0	1	2 ✓

The response accurately includes **both** of the following criteria.

- ☐ 1 point is earned for a statement that the two objects are in the same position at some time between 3 and 4 seconds
- ☐ 1 point is earned for an explanation that includes that object A is passing object B during the time interval

Example Response:

Object A is behind object B until about 3.6 seconds, when they are at the same position. During the time interval described object A is passing object B.

Part C

Select a point value to view scoring criteria, solutions, and/or examples and to score the response.

0	1 ✓

The response accurately includes

- ☐ 1 point is earned for a statement that Object B has an acceleration with a greater magnitude

Example Response:

Object B has the greatest magnitude of acceleration.

Part D

Select a point value to view scoring criteria, solutions, and/or examples and to score the response.

chapter1partc

0	1	2	3	4	5 ✓

The response accurately includes **five** of the following criteria.

- ☐ 1 point is earned for a statement that relates the change in the slope of the position vs. time graph to the acceleration of the object(s)
- ☐ 1 point is earned for a statement that identifies the constant slope of object A as a zero acceleration
- ☐ 1 point is earned for a statement that identifies the changing slope of object B as a nonzero acceleration
- ☐ 1 point is earned for a statement that the nonzero acceleration of object B is greater than the zero acceleration of object A.
- ☐ 1 point is earned for a logical, relevant, and internally consistent argument that addresses the required argument or question asked, and follows the guidelines described in the published requirements for the paragraph-length response

Example Response:

The change in the slope of each of the displacement vs. time represents the acceleration of the object. For object A the slope is constant, so the velocity is constant, meaning that the acceleration of object A is zero. The slope of the displacement vs. time graph for object B is changing which means that object B is accelerating. Since object B has a non-zero acceleration and object A has a zero acceleration, the acceleration of object B is greater than object A

chapter1partc

11.

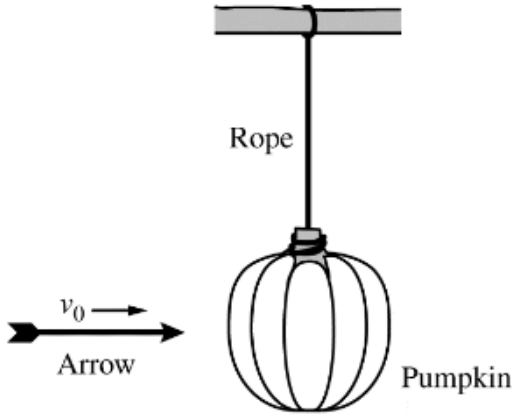

An archer tests various arrowheads by shooting arrows at a pumpkin that is suspended from a tree branch by a rope, as shown to the right. When struck head-on by the arrow, the pumpkin swings upward on the rope. The maximum angle θ that the rope makes with the vertical is different for each arrowhead that the archer tests. Each arrow, including its arrowhead, has the same mass m and is shot with the same velocity v_0 toward the right.

The arrowheads are made of different materials, however, and each behaves differently when it strikes the pumpkin, as described below.

- *Embedded arrow:* Strikes the pumpkin and remains embedded, while the pumpkin swings to angle θ_{emb}.
- *Pass arrow:* Passes all the way through the pumpkin and continues traveling away from the archer, while the pumpkin swings to angle θ_{pass}.
- Bounce arrow: Bounces off the pumpkin back toward the archer, while the pumpkin swings to angle θ_{bounce}.

a. Rank the three angles θ_{emb}, θ_{pass}, and θ_{bounce} from greatest to least in the spaces indicated below. Use "1" for the greatest angle, "2" for the next greatest, and so on. If any two or all three angles are the same, use the same number for their ranking.

_____θ_{emb} _____θ_{pass} _____θ_{bounce}

b. In a clear, coherent, paragraph-length response that may also contain figures and/or equations, justify your ranking.

Part A

Correct answer: ___2___ θembed ___3___ θpass ___1___ θ bounce

✓

0	1

chapter1partc

Student response earns one of the following 1 point(s):

1 point

Correct answer: ___2___ θembed ___3___ θpass ___1___ θ bounce

Part B

1 point is earned: For using conservation of momentum

Note: This point is earned for an indication of how momentum conservation applies to the situation.

1 point is earned: For correctly stating or implying that in all three cases the magnitude of the change in the horizontal momentum of the arrow during the collision equals magnitude of the momentum gained by the pumpkin

1 point is earned: For a valid argument explaining why the Bounce arrow must transfer the most momentum

1 point is earned: For stating that the Pass arrow ends up faster than the Embedded arrow or does not transfer as much momentum to the pumpkin immediately after collision

1 point is earned: For indicating (regardless of conclusion about whether the Pass or Embedded arrow ends up going faster after the collision) that the arrow that slowed more during the collision transfers more momentum to the pumpkin

1 point is earned: For an explicit or implicit correct justification, in terms of energy conservation, that the angle reached by the pumpkin is related to the speed of the pumpkin just after the collision

1 point is earned: For a logical, relevant, and internally consistent response that addresses the required argument or question asked, and follows the guidelines described in the published requirements for the paragraph-length response

> Example: The Bounce arrow is the only one that reverses direction, so has momentum to the left after the collision. By conservation of momentum the pumpkin must then have a greater momentum to the right than the arrow had before the collision. After the Embedded arrow hits, the arrow and pumpkin together have the same momentum as the arrow did just before the collision. The Pass arrow still has some momentum to the right after hitting the pumpkin so by conservation of momentum the pumpkin has less momentum to the right than the arrow did before the collision. By conservation of energy, the maximum angle that the pumpkin reaches depends on the speed of the pumpkin (higher speed means higher angle), so the Bounce arrow pumpkin has the highest angle and the Pass arrow pumpkin has the lowest angle.

✓

0	1	2	3	4	5	6	7

Student response earns 7 of the following 7 point(s)

1 point is earned: For using conservation of momentum

Note: This point is earned for an indication of how momentum conservation applies to the situation.

1 point is earned: For correctly stating or implying that in all three cases the magnitude of the change in the horizontal momentum of the arrow during the collision equals magnitude of the momentum gained by the pumpkin

1 point is earned: For a valid argument explaining why the Bounce arrow must transfer the most momentum

chapter1partc

1 point is earned: For stating that the Pass arrow ends up faster than the Embedded arrow or does not transfer as much momentum to the pumpkin immediately after collision

1 point is earned: For indicating (regardless of conclusion about whether the Pass or Embedded arrow ends up going faster after the collision) that the arrow that slowed more during the collision transfers more momentum to the pumpkin

1 point is earned: For an explicit or implicit correct justification, in terms of energy conservation, that the angle reached by the pumpkin is related to the speed of the pumpkin just after the collision

1 point is earned: For a logical, relevant, and internally consistent response that addresses the required argument or question asked, and follows the guidelines described in the published requirements for the paragraph-length response

> Example: The Bounce arrow is the only one that reverses direction, so has momentum to the left after the collision. By conservation of momentum the pumpkin must then have a greater momentum to the right than the arrow had before the collision. After the Embedded arrow hits, the arrow and pumpkin together have the same momentum as the arrow did just before the collision. The Pass arrow still has some momentum to the right after hitting the pumpkin so by conservation of momentum the pumpkin has less momentum to the right than the arrow did before the collision. By conservation of energy, the maximum angle that the pumpkin reaches depends on the speed of the pumpkin (higher speed means higher angle), so the Bounce arrow pumpkin has the highest angle and the Pass arrow pumpkin has the lowest angle.

chapter1partc

12. This question is a short free-response question. Show your work for each part of the question. (10 points, suggested time 15 minutes)

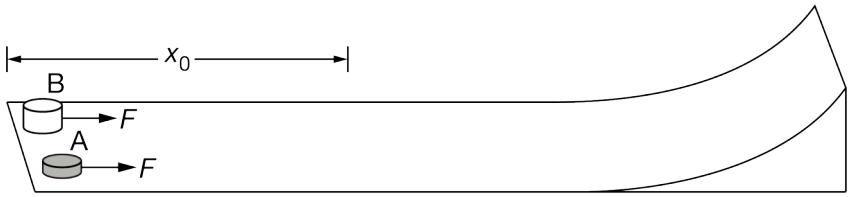

Two disks, A and B, are initially at rest at the left end of a track, as shown above. Disk B is more massive than disk A. The track has a horizontal section and then curves upward at the right end. The disks are each pushed to the right over a distance x_0 by identical constant horizontal forces of magnitude F. There is negligible friction between the track and the disks.

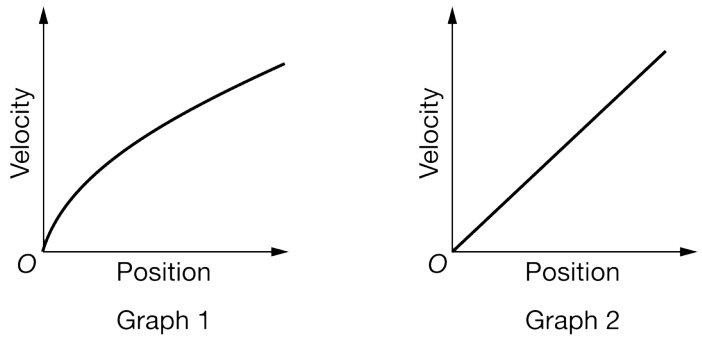

(a) Which of the graphs shown above correctly models the velocity of disk A as a function of position as it is being pushed by the force? Justify your answer.

(b) After sliding across the horizontal portion of the track, both disks slide partway up the curved section of the track. Identify which disk, if either, reaches a greater maximum height. If both disks reach the same maximum height, state this explicitly.

(c) In a clear, coherent paragraph-length response, justify your answer to part (b).

(d) Consider the case where friction is not negligible and the coefficient of kinetic friction between each disk and the track is the same. The disks are again pushed by the same force over the same distance, and each disk slides partway up the ramp. Identify which disk, if either, would reach a greater maximum height than the other in this case. If both disks reach the same maximum height in this case, state this explicitly. Briefly justify your answer.

Part A

Select a point value to view scoring criteria, solutions, and/or examples and to score the response.

Note: Indicating that velocity is proportional to the square root of distance or position earns both the second and third point.

chapter1partc

0	1	2	3 ✓

The response accurately includes **all** of the following criteria.

- ☐ 1 point is earned for correct identification of Graph 1 as representing the velocity of disk A as a function of its position as it is being pushed by the force, with an attempt at a justification.
- ☐ 1 point is earned for indicating that the work done on disk A is proportional to the position
  OR
  For indicating an appropriate kinematics relation between velocity and position.
- ☐ 1 point is earned for an explanation that includes that the velocity is proportional to the square root of work
  OR
  For an explanation that includes that the velocity is proportional to the square root of distance or position.

Example Response:

Graph 1 represents the velocity as a function of position. The work done on disk A is proportional to the displacement, but the velocity is proportional to the square root of the work. So, the velocity will be proportional to the square root of the position.

Part B

Select a point value to view scoring criteria, solutions, and/or examples and to score the response.

0	1 ✓

The response accurately includes

- ☐ 1 point is earned for correct identification of disk A.

Example Response:

Disk A will go higher on the track

Part C

Select a point value to view scoring criteria, solutions, and/or examples and to score the response.

chapter1partc

0	1	2	3	4	5 ✓

The response accurately includes **all** of the following criteria.

- ☐ 1 point is earned for explaining both disks have the same amount of work done on them
  OR
  For explaining that both disks have the same force applied but different masses, so the smaller mass has greater velocity.
- ☐ 1 point is earned for indicating conservation of energy.
- ☐ 1 point is earned for indicating that both disks have the same amount of gravitational potential energy at the maximum height.
- ☐ 1 point is earned for indicating that a larger mass will reach a smaller height for the same amount of change in gravitational potential energy, or conversely that a smaller mass will reach a greater height
  OR
  For indicating that a disk with a higher velocity will travel to a greater height.
- ☐ 1 point is earned for a logical, relevant, and internally consistent argument that addresses the required argument or question asked, and follows the guidelines described in the published requirements for the paragraph-length response.

Example Response:

Both disks have the same amount of work done on them since they experience the same force over the same distance. Once the forces stop pushing the blocks, the mechanical energy of each disk-earth system is constant. The kinetic energy at the bottom of the ramp will be equal to the gravitational potential energy at the maximum height. So, work done on both is the same, which means that the gravitational potential is the same at the maximum height, however the box with the smaller mass will have the bigger height for the same value of gravitational potential energy.

Part D

Select a point value to view scoring criteria, solutions, and/or examples and to score the response.

0	1 ✓

The response accurately includes **one** of the following criteria.

- ☐ 1 point is earned for a correct justification.

Example Response:

Without friction, disk A goes higher. With friction, disk B has a greater frictional force, so disk A will still go higher.

chapter1partc

13. This question is a short free-response question. Show your work for each part of the question. (10 points, suggested time 15 minutes)



Two disks, A and B, are initially at rest at the left end of a track, as shown above. Disk A is more massive than disk B. The track has a horizontal section and then curves upward at the right end. The disks are simultaneously pushed to the right by identical, constant, horizontal forces of magnitude F for the same amount of time. The forces are removed before the disks reach the curved section of the track, and there is negligible friction between the track and the disks.

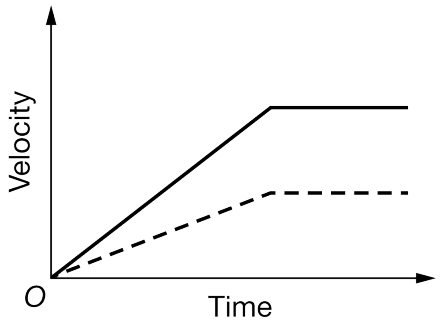

(a) The graph above shows the velocity of each disk as a function of time while the disks are moving on the horizontal section. Identify which disk's motion is represented by the solid line. Explain your reasoning.

(b) When the horizontal forces are removed, which disk, if either, has a greater momentum? If the disks have equal momentum, state this explicitly. Briefly justify your answer in terms of the impulse acting on each disk.

(c) After sliding across the horizontal section of the track, both disks slide partway up the curved section of the track. Identify which disk, if either, reaches a greater maximum height. If both disks reach the same maximum height, state this explicitly.

(d) In a clear, coherent, paragraph-length response, justify your answer to part (c).

Part A

Select a point value to view scoring criteria, solutions, and/or examples and to score the response.

0	1	2	3 ✓

The response accurately includes **all** of the following criteria.

chapter1partc

- [ ] 1 point is earned for correct identification of disk B as being represented by the solid line.
- [ ] 1 point is earned for indicating that the slope of the velocity vs time graph represents the acceleration.
- [ ] 1 point is earned for explaining that the smaller mass will have a greater acceleration for the same force applied.

Example Response:

The solid line represents the velocity of disk B as a function of time. Because disk B is less massive, with the same force applied to it, it will have a greater acceleration. The slope of the velocity vs. time graph represents the acceleration, so disk B will have a line with a larger slope and will have a higher speed after the same amount of time.

Part B

Select a point value to view scoring criteria, solutions, and/or examples and to score the response.

0	1 ✓

The response accurately includes

- [ ] 1 point is earned for indicating the disks experience the same impulse with correct justification.

Example Response:

Both disks are pushed with the same force for the same time. Since impulse is equal to the force applied times the time, the impulses experienced by both disks is the same.

Part C

Select a point value to view scoring criteria, solutions, and/or examples and to score the response.

0	1 ✓

The response accurately includes

- [ ] 1 point is earned for correctly stating that disk B goes higher up the ramp.

Example Response:

Disk B goes higher up the ramp.

Part D

Select a point value to view scoring criteria, solutions, and/or examples and to score the response.

chapter1partc

0	1	2	3	4	5 ✓

The response accurately includes **all** of the following criteria.

- ☐ 1 point is earned for indicating conservation of energy.
- ☐ 1 point is earned for indicating that the disk with greater initial kinetic energy corresponds to greater gravitational potential energy at the top of the slide.
- ☐ 1 point is earned for indicating that the mass terms cancel or do not affect the maximum height reached by a disk.
- ☐ 1 point is earned for indicating that the disk that corresponds to greater potential energy goes higher.
- ☐ 1 point is earned for a logical, relevant, and internally consistent argument that addresses the required argument or question asked, and follows the guidelines described in the published requirements for the paragraph-length response.

Example Response:

The final height of each disk only depends on its initial speed before reaching the ramp. This is because the mass term cancels when setting kinetic energy equal to final gravitational potential energy. Since block B has a larger speed after being pushed, it will have the largest kinetic energy at the bottom of the ramp. With the largest kinetic energy at the bottom of the ramp, it will also have the greatest gravitational potential energy at the top of the ramp, so it will reach the higher point on the ramp.

chapter1partc

14. This question is a short free-response question. Show your work for each part of the question. (10 points, suggested time 15 minutes)

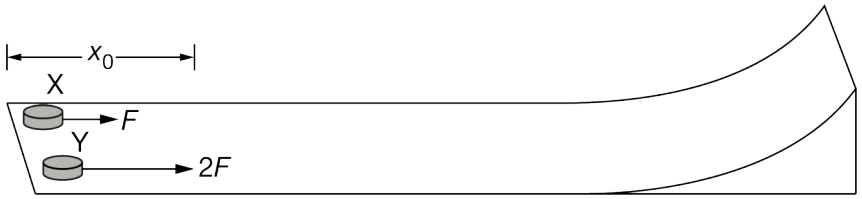

Two identical disks, X and Y, are initially at rest at the left end of a track, as shown above. The track has a horizontal section and then curves upward at the right end. The disks are pushed to the right over a distance x_0. Disk X is pushed by a horizontal force of magnitude F, and disk Y is pushed by a horizontal force of magnitude $2F$. There is negligible friction between the track and the disks.

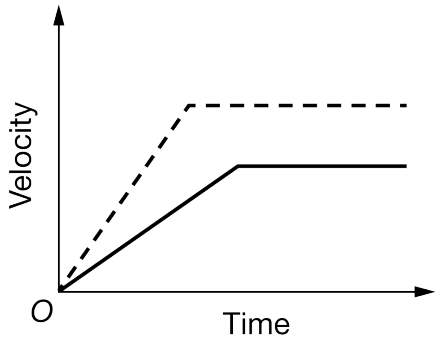

(a) The graph above shows the velocity of each disk as a function of time while both disks are on the horizontal section of the track. Identify which disk's motion is represented by the dashed line and explain your reasoning.

(b) After sliding across the horizontal portion of the track, both disks slide partway up the curved section of the track. Identify which disk, if either, reaches a greater maximum height. If both disks reach the same maximum height, state this explicitly.

(c) In a clear, coherent paragraph-length response, justify your answer to part (b).

(d) Consider the case where friction is not negligible and the coefficient of kinetic friction between each disk and the track is the same. Each disk is again pushed by the same force as in the original scenario over a distance x_0, and each disk slides partway up the ramp. Identify which disk, if either, would reach a greater maximum height than the other in this case. If both disks reach the same maximum height in this case, state this explicitly. Briefly justify your answer.

Part A

Select a point value to view scoring criteria, solutions, and/or examples and to score the response.

chapter1partc

0	1	2	3 ✓

The response accurately includes **all** of the following criteria.

- ☐ 1 point is earned for correct identification of disk Y as being represented by the dashed line, with an attempt at a justification.
- ☐ 1 point is earned for indicating that the slope of the velocity vs time graph represents the acceleration.
- ☐ 1 point is earned for explaining that a greater force will lead to a greater acceleration (slope of velocity vs. time graph).

Example Response:

The slope of the velocity vs. time graph represents the acceleration. A greater force will lead to a greater acceleration, or a steeper slope. So, the dashed line represents disk Y.

Part B

Select a point value to view scoring criteria, solutions, and/or examples and to score the response.

0	1 ✓

The response accurately includes

- ☐ 1 point is earned for correct identification of disk Y.

Example Response:

Disk Y reaches a greater maximum height.

Part C

0	1	2	3	4	5 ✓

The response accurately includes **all** of the following criteria.

- ☐ 1 point is earned for indicating that more work is done on disk Y,
  OR
  For indicating that disk Y has a greater acceleration,

chapter1partc

OR

For indicating that disk Y has greater *v* as seen on the graph.

- 1 point is earned for indicating conservation of energy.
- 1 point is earned for indicating disk Y has more energy (or speed) after being accelerated by the force.
- 1 point is earned for indicating that the disk Y-Earth system will have more gravitational potential energy than the disk X-Earth system when each disk is at its maximum height

OR

For indicating that a disk with a higher velocity will travel to a greater height.

- 1 point is earned for a logical, relevant, and internally consistent argument that addresses the required argument or question asked, and follows the guidelines described in the published requirements for the paragraph-length response.

Example Response:

Disk Y has more work done on it, since it is pushed with twice the force over the same distance. Since more work was done on disk Y it has more kinetic energy than disk X after being pushed. Since the energy of each disk-earth system is constant after the push is over, the disk Y-earth system will have more gravitational potential energy than the disk X-earth system, so disk Y goes higher.

Part D

Select a point value to view scoring criteria, solutions, and/or examples and to score the response.

0	1 ✓

The response accurately includes

- 1 point is earned for a justification for disk Y still reaching a greater height.

Example Response:

Friction results in the same amount of energy dissipated for both disks. So, disk Y still has more energy.

chapter1partc

15. This question is a short free-response question. Show your work for each part of the question. (10 points, suggested time 15 minutes)

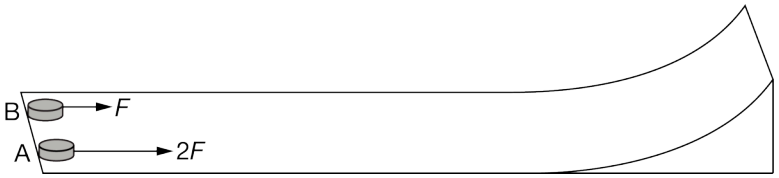

Two identical disks, A and B, are initially at rest at the left end of a track, as shown above. The track has a horizontal section and then curves upward at the right end. The disks are simultaneously pushed to the right for the same amount of time. Disk A is pushed by a horizontal force of magnitude $2F$, and disk B is pushed by a horizontal force of magnitude F. The forces are removed before the disks reach the curved section of the track, and there is negligible friction between the track and the disks.

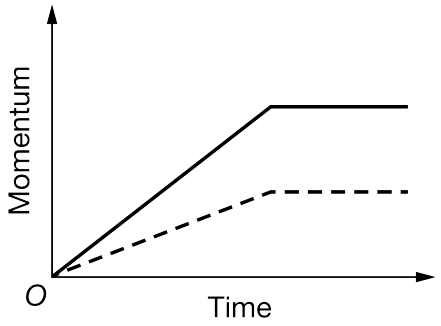

(a) The graph above shows the momentum of each disk as a function of time while the disks are moving horizontally. Identify which disk's motion is represented by the solid line. Explain your reasoning.

(b) During the time interval that the forces are exerted on the disks, which disk, if either, travels a greater distance along the horizontal section of the track? If the disks travel the same distance, state this explicitly. Briefly explain your answer.

(c) After sliding across the horizontal section of the track, both disks slide partway up the curved section of the track. Identify which disk, if either, reaches a greater maximum height. If both disks reach the same maximum height, state this explicitly.

(d) In a clear, coherent, paragraph-length response, justify your answer to part (c).

Part A

Select a point value to view scoring criteria, solutions, and/or examples and to score the response.

0	1	2	3 ✓

chapter1partc

The response accurately includes **all** of the following criteria.

- ☐ 1 point is earned for a correct identification of disk A as being represented by the solid line.
- ☐ 1 point is earned for indicating the slope of the graph represents the applied force.
- ☐ 1 point is earned for indicating that the disk A graph should have a larger slope (because of the larger force).

Example Response:

The solid line represents disk A. The slope of the graph represents force because change in momentum equals Force times time. The slope of the solid line has a larger slope because disk A experiences a larger force.

Part A - Alternate Solution

Select a point value to view scoring criteria, solutions, and/or examples and to score the response.

0	1	2	3 ✓

*The response accurately includes **all** of the following criteria.*

- ☐ *1 point is earned for a correct identification of disk A as being represented by the solid line.*
- ☐ *1 point is earned for relating momentum to speed or velocity.*
- ☐ *1 point is earned for indicating that disk A has a larger acceleration, and this is related to the slope of the graph.*

Example Response:

The slope of the solid line has a larger slope because disk A experiences a larger force. This means that the acceleration of disk A is greater, which means that the speed after the same time is larger. Since momentum is proportional to the velocity of the disk, disk A will have a larger momentum and a steeper slope.

Part B

Select a point value to view scoring criteria, solutions, and/or examples and to score the response.

0	1 ✓

The response accurately includes

- ☐ 1 point is earned for a valid justification (e.g., Disk A has greater average speed over same time interval).

Example Response:

chapter1partc

Disk A travels further during the time when the force is applied. The average speed of disk A is larger over the time interval, so with a larger average speed over the same time, it will travel a greater distance.

Part C

Select a point value to view scoring criteria, solutions, and/or examples and to score the response.

0	1 ✓

The response accurately includes

- ☐ 1 point is earned for correctly stating that disk A goes higher up the ramp.

Example Response:

Disk A goes higher up the ramp.

Part D

Select a point value to view scoring criteria, solutions, and/or examples and to score the response.

0	1	2	3	4	5 ✓

The response accurately includes **all** of the following criteria.

- ☐ 1 point is earned for correctly relating kinetic energy to speed.
- ☐ 1 point is earned for indicating conservation of energy.
- ☐ 1 point is earned for indicating that the disk with greater initial kinetic energy corresponds to greater gravitational potential energy at the top of the slide.
- ☐ 1 point is earned for indicating that the disk that corresponds to greater potential energy goes higher.
- ☐ 1 point is earned for a logical, relevant, and internally consistent argument that addresses the required argument or question asked, and follows the guidelines described in the published requirements for the paragraph-length response.

Example Response:

Because disk A has the greater speed at the end of the push, it will have more kinetic energy than disk B. Because mechanical energy of each disk-earth system will be conserved from when the disks are released until they reach their maximum heights, the disk with the largest kinetic energy will have the largest potential energy and since potential energy is related to the height reached, disk A will go the highest up the ramp.

chapter1partc

16. This question is a short free-response question. Show your work for each part of the question. (10 points, suggested time 15 minutes)

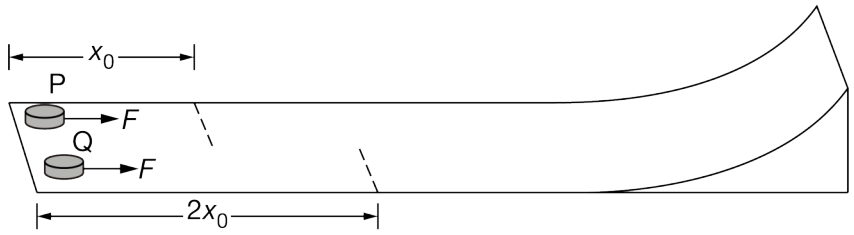

Two identical disks, P and Q, are initially at rest at the left end of a track, as shown above. The track has a horizontal section and then curves upward at the right end. The disks are each pushed to the right with a horizontal force with constant magnitude F. Disk P is pushed to the right for a distance of x_0, and disk Q is pushed to the right for a distance of $2x_0$. There is negligible friction between the track and the disks.

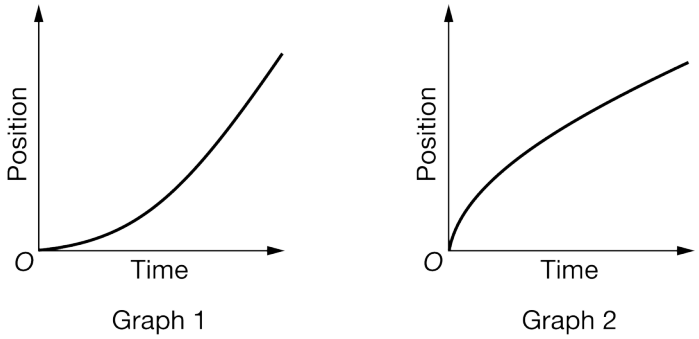

(a) The figure above shows two possible graphs of position as a function of time for disk P while it is being pushed along the horizontal section of the track. Which graph best represents the motion of disk P? Briefly justify your selection.

(b) After sliding across the horizontal portion of the track, both disks slide partway up the curved section of the track. Identify which disk, if either, reaches a greater maximum height. If both disks reach the same maximum height, state this explicitly.

(c) In a clear, coherent paragraph-length response, justify your answer to part (b).

(d) Consider the case where friction is not negligible and the coefficient of kinetic friction between each disk and the track is the same. Each disk is again pushed by the same force F over the same distance as in the original scenario, and each disk slides partway up the ramp. Identify which disk, if either, would reach a greater maximum height than the other disk in this case. If both disks reach the same maximum height in this case, state this explicitly. Briefly justify your answer.

Part A

Select a point value to view scoring criteria, solutions, and/or examples and to score the response.

chapter1partc

0	1	2	3 ✓

The response accurately includes **all** of the following criteria.

- ☐ 1 point is earned for correct identification of Graph 1 as best representation of position of disk P as a function of time while on the horizontal track, with an attempt at a justification.
- ☐ 1 point is earned for addressing the curvature of the graph (or rate of change of slope).
- ☐ 1 point is earned for relating the curvature/change of slope to increasing velocity (or constant acceleration).

Example Response:

Graph 1 correctly models the position as a function of time for disk P. The slope of the position vs. time graph represents the velocity which is increasing with a constant acceleration because the net external force is constant. Therefore, the slope of the position graph will be increasing at an increasing rate.

Part B

Select a point value to view scoring criteria, solutions, and/or examples and to score the response.

0	1 ✓

The response accurately includes

- ☐ 1 point is earned for correct identification of disk Q reaching the greater maximum height.

Example Response:

Disk Q goes higher up the ramp

Part C

Select a point value to view scoring criteria, solutions, and/or examples and to score the response.

0	1	2	3	4	5 ✓

The response accurately includes **all** of the following criteria.

chapter1partc

- [ ] 1 point is earned for indicating that more work is done on disk Q
  OR
  For indicating that the force is exerted over a larger distance
  OR
  For indicating that disk Q accelerates for a longer time.
- [ ] 1 point is earned for indicating conservation of energy.
- [ ] 1 point is earned for indicating disk Q has more energy (or speed) after being accelerated by the force over a longer distance.
- [ ] 1 point is earned for indicating that the disk Q-Earth system will have more gravitational potential energy than the disk P-Earth system when the disk is at its maximum height
  OR
  For indicating that a disk with a higher velocity will travel to a greater height.
- [ ] 1 point is earned for a logical, relevant, and internally consistent argument that addresses the required argument or question asked, and follows the guidelines described in the published requirements for the paragraph-length response.

Example Response:

Work done on the disks is proportional to the force times the distance the force is applied over. Because disk Q is pushed over twice the distance, it receives twice the work. Therefore, because work is equal to the change in kinetic energy and both disks are initially at rest, disk Q has a greater kinetic energy at the bottom of the ramp. Because the mechanical energy of the disk Q-earth system is constant on the ramp, the system will have more gravitational potential energy at disk Q's maximum height, and so, disk Q will go higher.

Part D

Select a point value to view scoring criteria, solutions, and/or examples and to score the response.

Note: If in part (b) the response claimed both would go to the same height, this point can be earned if that claim is repeated here and justified by saying that friction acts on both equally.

0	1 ✓

The response accurately includes

- [ ] 1 point is earned for a correct justification that disk Q will still go higher.

Example Response:

Even though there is friction, the energy lost to friction is identical in each case, so disk Q still has more energy at the bottom of the ramp and so still goes higher.

chapter1partc

17. This question is a short free-response question. Show your work for each part of the question.

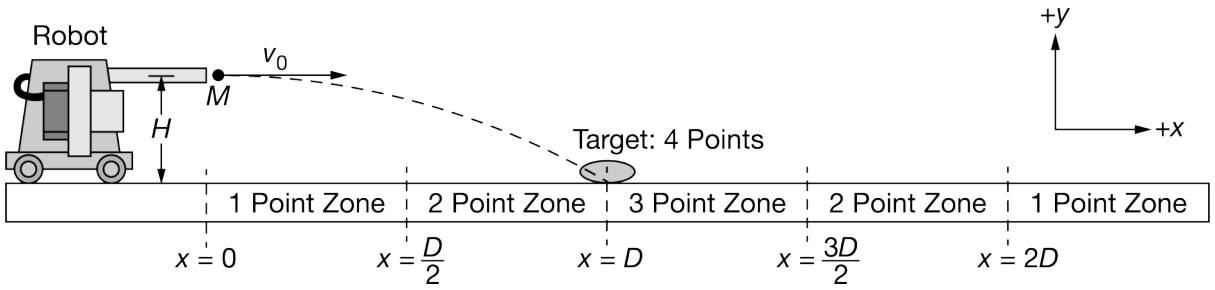

A group of students prepare for a robotic competition and build a robot that can launch large spheres of mass M in the horizontal direction with a variable speed and from a variable vertical position and a fixed horizontal position $x = 0$. The robot is calibrated by adjusting the speed at which the sphere is launched and the height of the robot's sphere launcher. Depending on where the spheres land on the ground, students earn points based on the accuracy of the robot. The robot is calibrated so that when the spheres are launched from a vertical position $y = H$ and speed v_0, they consistently land on the ground on a target that is at a position $x = D$. Positive directions for vector quantities are indicated in the figure.

(a) On the axes below, sketch the graphs of the horizontal and vertical components of the sphere's velocity v as a function of time t between $t = 0$, when the sphere is launched and $t = T$, when the sphere hits the target. Label $t = T$ for the horizontal component of the sphere's velocity and the vertical component of the sphere's velocity.

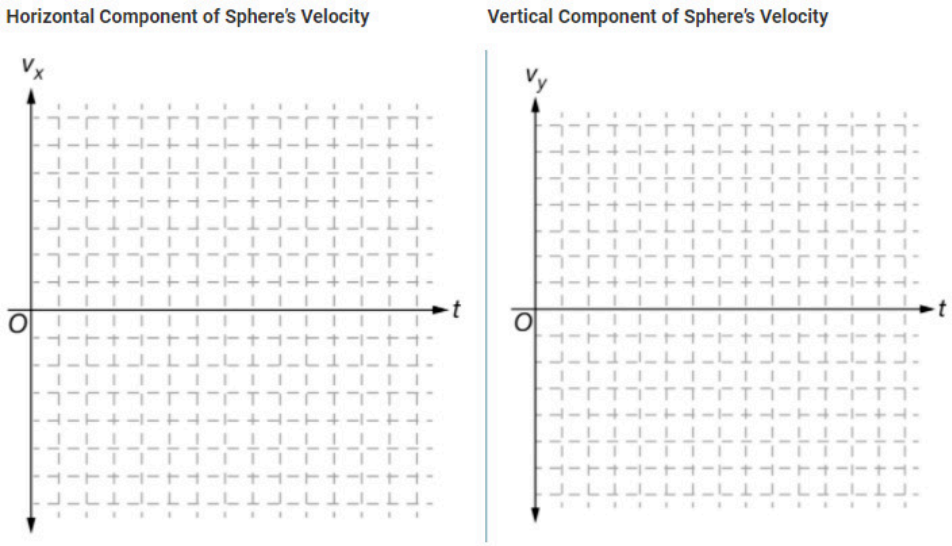

When the students arrive at the competition, it is determined that the height of the sphere launcher can no longer be adjusted due to a mechanical malfunction. Therefore, the spheres must be launched at a vertical position of $y = \frac{H}{2}$. However, the spheres may be launched at speed v_0 or $2v_0$.

(b) In a clear, coherent paragraph-length response that may also contain diagrams and/or equations, describe the speed at which a sphere should be launched so that the students earn the maximum number of points in the competition.

Part (a)

chapter1partc

Select a point value to view scoring criteria, solutions, and/or examples and to score the response.

0	1	2 ✓

Student response accurately includes both of the following criteria.

- ☐ 1 point is earned for sketching a horizontal line above the horizontal axis from $t = 0$ to $t = T$.
- ☐ 1 point is earned for sketching a line with a constant slope that begins at the origin and becomes more negative from $t = 0$ to $t = T$.

Example Response:

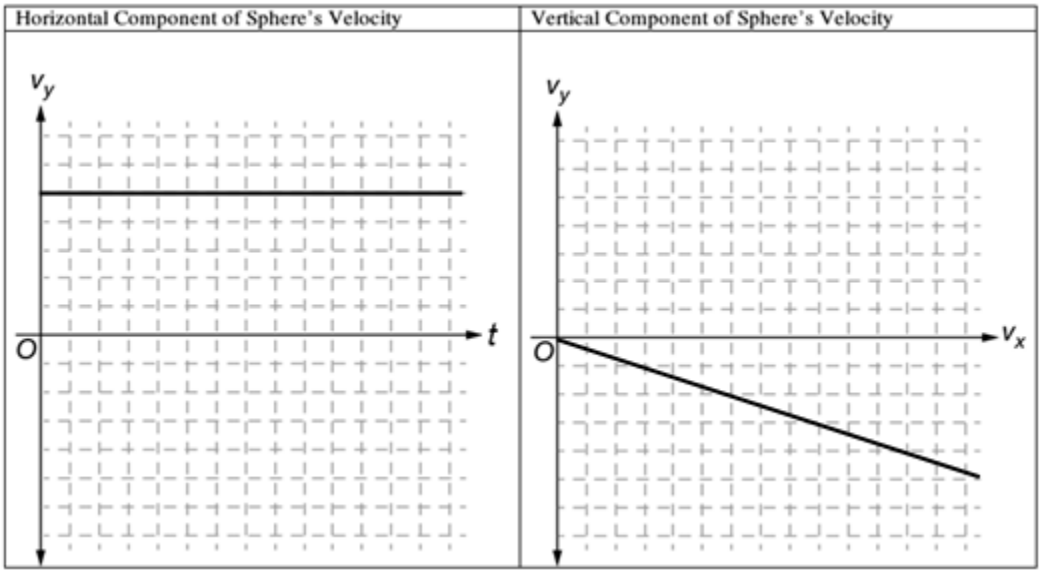

Part (b)

Select a point value to view scoring criteria, solutions, and/or examples and to score the response.

0	1	2	3	4	5 ✓

Student response accurately includes all of the following criteria.

- ☐ 1 point is earned for a statement that indicates that a sphere launched from a vertical height of $y = \frac{H}{2}$ will result in a free fall time that is less than T .
- ☐ 1 point is earned for a statement that indicates that if the sphere is launched at the original speed v_0 that the distance the sphere travels before hitting the ground will be $x < D$.
- ☐ 1 point is earned for a statement that indicates that with a launch height of $y = \frac{H}{2}$, and a speed of either

chapter1partc

v_0 or $2v_0$, the students can no longer earn 4 points.

- [ ] 1 point is earned for a statement that indicates that to get the most points, since the students can no longer hit the target, they should aim for the 3-point zone by making $v = 2v_0$.
- [ ] 1 point is earned for a logical, relevant and internally consistent argument that addresses the required arguments or question asked and follows the guidelines described in the published requirements for the paragraph-length response.

Example Response:

Since the sphere is to be launched from a position $y = \frac{H}{2}$, the time that the sphere takes to hit the ground will be less than when the sphere is launched from $y = H$. Since the sphere will take less time to hit the ground, if it is launched with the same initial speed v_0, it will not travel as far horizontally before hitting the ground so that $x < D$. Because students can only launch from $y = \frac{H}{2}$, with speeds of v_0 or $2v_0$, they can no longer hit the target, and should instead aim for the 3 Point zone by giving the spheres an initial speed of $2v_0$.

chapter1partc

18. This question is a short free-response question. Show your work for each part of the question. (10 points, suggested time 15 minutes)

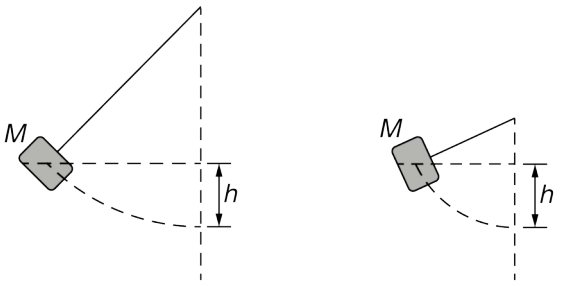

Setup A Setup B

Note: Figures not drawn to scale.

Students construct two experimental setups A and B, as shown above. In each setup one end of a string of negligible mass is fixed in place and the other end is attached to a block of mass M. The string in setup A is longer than the string in setup B. The blocks are held so that the center of the blocks have the same vertical displacement h above the lowest point in the swing, as shown above. The blocks are then released from rest.

(a) Consider the instant in each block's motion when the string is vertical. Is the magnitude of the acceleration of the block at this instant greater for setup A, greater for setup B, or the same for both setups?

(b) In a clear, coherent, paragraph-length response, explain your reasoning for your response to part (a).

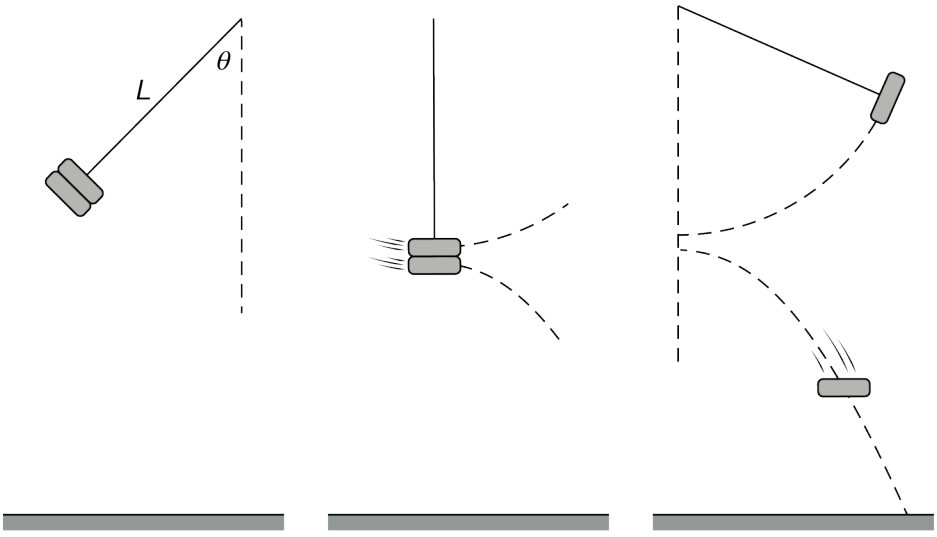

Note: Figures not drawn to scale.

Another experimental setup is created, this time with two blocks of equal mass that are taped together, as shown above at left. When the string is vertical, as shown above center, the tape fails and the bottom block separates from

the top block and falls to the floor. The top block is still attached to the string and reaches the highest point of its swing before the bottom block reaches the floor, as shown above at right.

(c) For the blocks-Earth system, in which of the following time intervals, if any, is the total mechanical energy of the system the same at the beginning and end of the interval? Be sure to indicate all time intervals that apply, or to write "none" if none of the time intervals apply. Briefly explain your reasoning.

- Interval A: Immediately after the blocks are released to immediately before the tape fails
- Interval B: Immediately before the tape fails to immediately after the tape fails
- Interval C: Immediately after the tape fails to the instant the top block reaches its maximum height

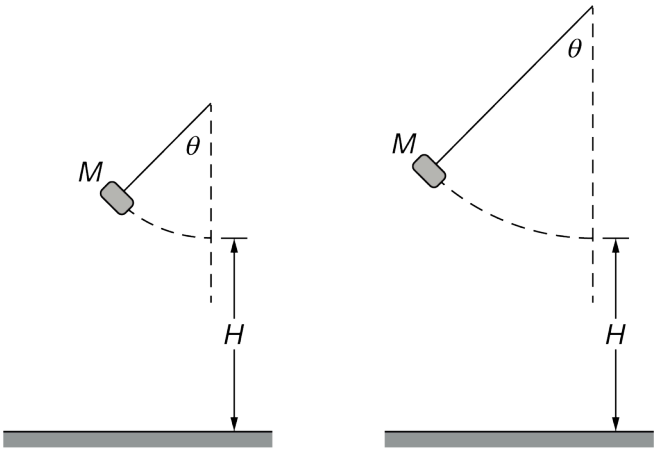

Note: Figures not drawn to scale.

Now two experimental setups are constructed that use strings of different lengths and identical blocks of mass M. The strings are at the same initial angle from the vertical when each block is released, as shown above. The setups are adjusted so that the blocks are at the same height H above the floor when the strings are vertical, as shown above.

This time, the string breaks when it is vertical, as shown below in the middle figure for one setup. Each block then falls to the floor, as shown at right below.

chapter1partc

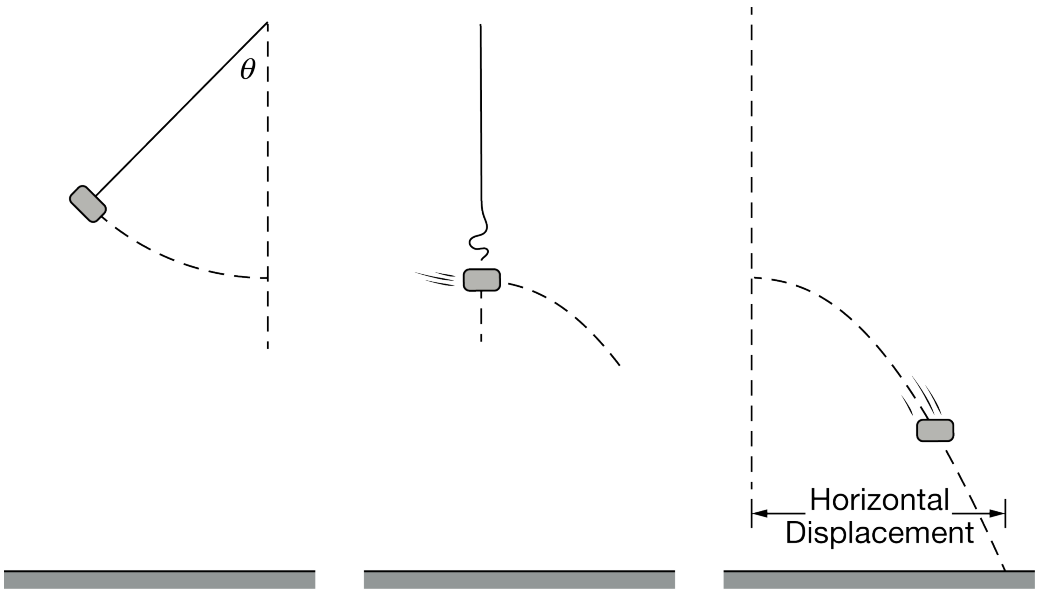

Note: Figures not drawn to scale.

(d) Is the horizontal displacement, from where the string breaks to where the block hits the floor, greater for the block with the shorter string, greater for the block with the longer string, or the same for both blocks? Briefly explain your reasoning.

Part A

Select a point value to view scoring criteria, solutions, and/or examples and to score the response.

0	1 ✓

The response accurately includes:

- ☐ 1 point is earned for indicating that the acceleration is greater for setup B than for setup A.

Part B

Select a point value to view scoring criteria, solutions, and/or examples and to score the response.

Note: If the response does not clearly indicate that the speed or kinetic energy is the same for A and B, it will not earn the fourth point but may earn the paragraph point as long as it also addresses acceleration and has no more than one incorrect statement.

chapter1partc

0	1	2	3	4	5 ✓

The response accurately includes **all** of the following criteria.

- ☐ 1 point is earned for indicating that the same change in height means the same change in gravitational potential energy.
- ☐ 1 point is earned for indicating that the same change in gravitational potential energy means the same kinetic energy (so same speed).
- ☐ 1 point is earned for any indication that the mass is in circular motion which may include the mention of centripetal force, centripetal acceleration or the expression v^2/L or v^2/r.
- ☐ 1 point is earned for indicating that the same speed *v* and longer length *L* means larger denominator in v^2/r resulting in less acceleration (OR that a shorter length means greater acceleration).
- ☐ 1 point is earned for a logical, relevant, and internally consistent argument that addresses the required argument or question asked, and follows the guidelines described in the published requirements for the paragraph-length response.

Example Response:

The same change in height means that each block-Earth system has the same change in gravitational potential energy, and since they have the same change in gravitational potential energy, the blocks have the same change in kinetic energy, which means that they have the same speed. Since acceleration is proportional to v squared and inversely proportional to R, the same speed but a shorter string length means that the acceleration for the block on the shorter string in setup B is greater.

Part C

Select a point value to view scoring criteria, solutions, and/or examples and to score the response.

Note: Simply describing or defining the energy transformations or calling this a closed system is not enough to earn the second point.

0	1	2 ✓

The response accurately includes **both** of the following criteria.

- ☐ 1 point is earned for indicating intervals, A, B, and C.
- ☐ 1 point is earned for a correct explanation in terms of external forces or work.

Example Response:

Intervals A, B and C since there are no external forces acting on the system

chapter1partc

Part D

Select a point value to view scoring criteria, solutions, and/or examples and to score the response.

Correct answer: The horizontal displacement is greater for block with the longer string.

Note: Indicating a greater momentum or kinetic energy for the block with the longer string earns the first point.

0	1	2 ✓

The response accurately includes **both** of the following criteria.

- ☐ 1 point is earned for indicating that the velocity or horizontal component of velocity is the greater for the block on the longer string when the strings break.
- ☐ 1 point is earned for indicating that the blocks fall for equal amounts of time because they fall the same height.

Example Response:

A longer string means greater change in gravitational potential energy, so there is a greater kinetic energy and speed for the block on the longer string. They fall for equal times because they fall from the same height, so the horizontal displacement will be greater for the block on the longer string.

chapter1partc

19. This question is a short free-response question. Show your work for each part of the question. (10 points, suggested time 15 minutes)

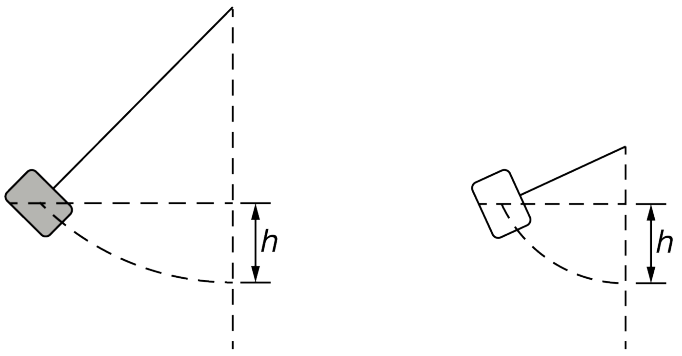

Setup A Setup B

Note: Figure not drawn to scale.

Students construct two experimental setups A and B, as shown above. In each setup one end of a string of negligible mass is fixed in place and the other end is attached to a block. The string in setup A is longer than the string in setup B and the blocks have different masses. The blocks are held so that the center of the blocks have the same vertical displacement h above the lowest point in the swing, as shown above. The blocks are then released from rest.

(a) Consider the instant in each block's motion when the string is vertical. Is the speed of the block at this instant in setup B greater than, less than, or equal to the speed of the block in setup A?

(b) The string tension is the same for both setups when the strings are instantaneously vertical with the blocks in motion. In a clear, coherent, paragraph-length response, do the following.

Explain your reasoning for your response to part (a).
Explain why the string tension could be the same for both pendulums when the strings are instantaneously vertical.

You do not need to show mathematically that the tensions are equal. You only need to provide reasoning for why they could be equal.

chapter1partc

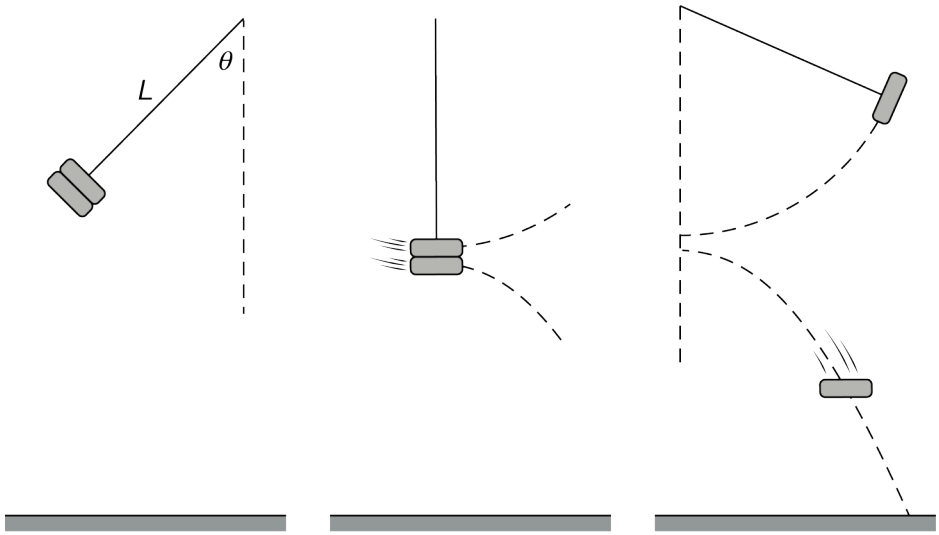

Note: Figures not drawn to scale.

Another experimental setup is created, this time with two blocks of equal mass that are taped together, as shown above at left. At the instant the string is vertical, as shown above, the tape fails and the bottom block separates from the top block and falls to the floor, as shown above center. The top block is still attached to the string and reaches the highest point of its swing before the bottom block reaches the floor, as shown above at right.

(c) The angular momentum of an object of mass m moving with speed v in a circle of radius r has a magnitude of mvr about the center of the circle. For the system consisting of the two blocks only, and not Earth, consider the angular momentum about the top end of the string, which is attached to the ceiling. Is the angular momentum constant from when the block is released to when the string is vertical? Briefly explain your reasoning.

(d) When the top block reaches the highest point of its swing for the first time after the tape fails, is it higher than, lower than, or at the same height as it was when the blocks were initially released? Briefly explain your reasoning.

Part A

Select a point value to view scoring criteria, solutions, and/or examples and to score the response.

0	1 ✓

The response accurately includes:

- ☐ 1 point is earned for indicating that the speed of the block in setup A is equal to the speed in setup B.

Part B

Select a point value to view scoring criteria, solutions, and/or examples and to score the response.

chapter1partc

0	1	2	3	4	5 ✓

The response accurately includes **all** of the following criteria.

- ☐ 1 point is earned for indicating that, with the same vertical displacement, there's the same change in height (or gravitational potential energy), so the same kinetic energy, and therefore the same speed.
- ☐ 1 point is earned for an indication that either centripetal acceleration or centripetal force or net force,
  OR
  the equations v^2/r or mv^2/r, is relevant.
- ☐ 1 point is earned for indicating that a longer string means smaller acceleration (v^2/L) or smaller centripetal force (Mv^2/L).
- ☐ 1 point is earned for indicating that a greater mass means greater centripetal or net force (Mv^2/L),
  OR
  greater tension $(Mg + Mv^2/L)$.
  Note: The previous two points can both be earned for a single statement addressing both *M* and *L*, or the ratio M/L.
- ☐ 1 point is earned for a logical, relevant, and internally consistent argument that addresses the required argument or question asked, and follows the guidelines described in the published requirements for the paragraph-length response.

Example Response:

The speed is the same for both setups. Since the setups have the same change in height h, each block-Earth system has the same change in potential energy and the blocks have the same kinetic energy and speed at the bottom of the swing. The centripetal force Mv^2/L, hence the string tension, could be the same for both setups if setup A, with a longer string length L, also had a larger block mass M.

Part C

Select a point value to view scoring criteria, solutions, and/or examples and to score the response.

0	1	2 ✓

The response accurately includes **both** of the following criteria.

- ☐ 1 point is earned for indicating "no", with an attempt at an explanation.
- ☐ 1 point is earned for a correct explanation of why the angular momentum changes using torque or change in angular speed.

Example Response:

chapter1partc

Gravity acts as an external torque on the system about the pivot point.

The block goes from being at rest to moving counterclockwise about the pivot point.

The block speed (or angular speed) goes from zero initially to a nonzero value.

Part D

Select a point value to view scoring criteria, solutions, and/or examples and to score the response.

0	1	2 ✓

The response accurately includes **both** of the following criteria.

- ☐ 1 point is earned for indicating “The same”.
- ☐ 1 point is earned for a correct explanation using conservation of energy.

Example Response:

Since the speed is the same immediately before and after separation, the height will be the same (by conservation of energy)

chapter1partc

20. This question is a short free-response question. Show your work for each part of the question. (10 points, suggested time 15 minutes)

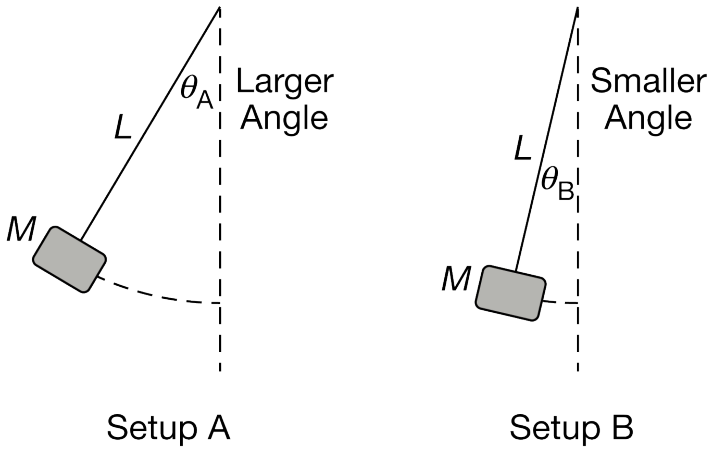

Note: Figures not drawn to scale.

Students construct two experimental setups A and B, as shown above. Each setup consists of a small block of known mass M attached to a string with negligible mass and length L. The tops of the strings are fixed in place. The blocks are held so that the strings make different angles θ_A (theta A) and θ_B (theta B) with the vertical, where $\theta_A > \theta_B$ as shown above. The blocks are then released from rest.

(a) When the blocks are in motion and the strings are instantaneously vertical, is the tension in the string in setup A greater than, less than, or equal to the tension in the string in setup B?

(b) In a clear, coherent, paragraph-length response, explain your reasoning for your response to part (a).

chapter1partc

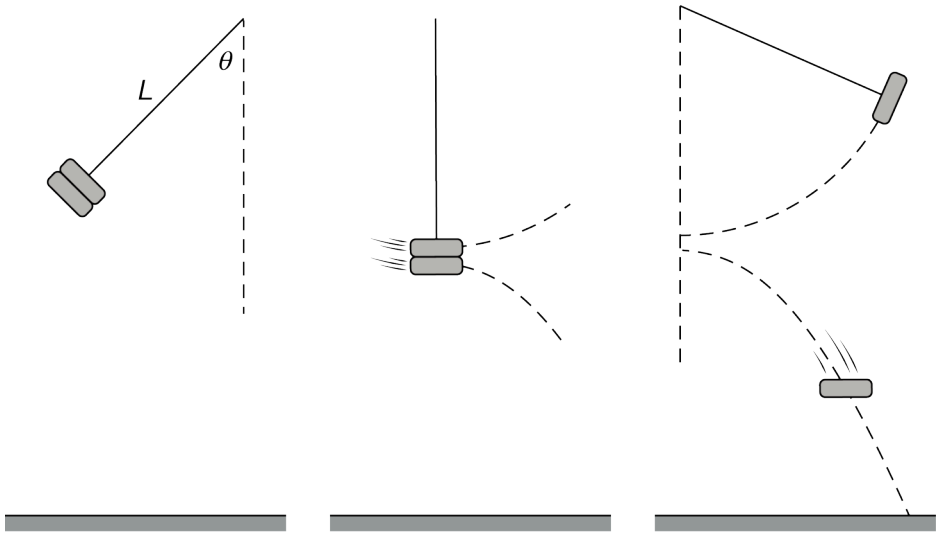

Note: Figures not drawn to scale.

Another experimental setup is created, this time with two blocks of equal mass that are taped together, as shown above at left. At the instant the string is vertical, as shown above center, the tape fails and the bottom block separates from the top block and falls to the floor. The top block is still attached to the string and reaches the highest point of its swing before the bottom block reaches the floor, as shown above at right.

(c) For the system consisting of the two blocks only, and not Earth, is the total mechanical energy of the system the same immediately after the blocks are released as it is when the top block first reaches the highest point of its swing? Briefly explain your reasoning.

(d) When the top block reaches the highest point of its swing for the first time after the tape fails, is the angle made by the string with the vertical larger than, smaller than, or equal to the angle when the blocks were initially released? Note that the figures are not drawn to scale. Briefly explain your reasoning.

Part A

Select a point value to view scoring criteria, solutions, and/or examples and to score the response.

Correct Answer: “greater than”

0	1 ✓

The response accurately includes

- ☐ 1 point is earned for indicating “greater than”.

Example Response:

chapter1partc

Tension is greater for the larger release angle in setup A.

Part B

Select a point value to view scoring criteria, solutions, and/or examples and to score the response.

Note: a response that states that a greater angle means a greater speed when both strings are vertical earns one of the first two points. It is not required to state that *Mg* is constant to earn this point. If the response states that Tension IS the net force, the response does not earn this point.

0	1	2	3	4	5 ✓

The response accurately includes **all** of the following criteria.

- ☐ 1 point is earned for indicating that a greater angle means a greater height, (or drop height or change in height or gravitational potential energy)
  OR
  For indicating that the pendulums have the same period, but A has a greater amplitude.
- ☐ 1 point is earned for indicating that a greater change in height (or gravitational potential energy) means more kinetic energy (or faster speed)
  OR
  For indicating that A has a greater speed when the string is vertical because of its larger amplitude.
- ☐ 1 point is earned for indicating that a faster speed means greater acceleration $\left(v^2/r\right)$.
- ☐ 1 point is earned for indicating that a greater acceleration means a greater net force $\left(T - Mg\right)$.
- ☐ 1 point is earned for a logical, relevant, and internally consistent argument that addresses the required argument or question asked, and follows the guidelines described in the published requirements for the paragraph-length response.

Example Response:

The tension will be greater in setup A. Since there is a greater angle in A, the block has a greater change in height and therefore the block-Earth system has a greater change in potential energy and the block has a greater kinetic energy at the bottom of its swing. Since the block's speed is greater in A, the acceleration v^2/r is greater. The tension in A must be greater since the tension is the sum of the centripetal force and the gravitational force.

Part C

Select a point value to view scoring criteria, solutions, and/or examples and to score the response.

Note: A restatement of the events does not earn this point. Describing the motion both of blocks (which implies considering kinetic energy only) can earn this point. An explanation in terms of external forces (gravity) doing work on the system can earn this point. If only one block is mentioned or gravitational potential energy is included, this point is not earned.

chapter1partc

0	1	2 ✓

The response accurately includes **both** of the following criteria.

- ☐ 1 point is earned for indicating “no”, with an attempt at an explanation.
- ☐ 1 point is earned for a correct explanation using work and/or energy.

Example Response:

While the top block may be at rest at the highest point of its swing, the bottom block is moving, so the total kinetic energy of the two blocks is greater than its initial value of zero.

OR

Gravity does positive work on the bottom block and zero total work on the top block, so positive work is done on the system.

Part D

Select a point value to view scoring criteria, solutions, and/or examples and to score the response.

Correct Answer: “Equal to”

0	1	2 ✓

The response accurately includes **both** of the following criteria.

- ☐ 1 point is earned for indicating “Equal to”.
- ☐ 1 point is earned for a correct explanation using conservation of energy.

Example Response:

Because the mass of the attached block is half the original total mass, then when the blocks separate, the attached mass will have half the original total energy, and it will swing to the same height so that the energy is conserved.

chapter1partc

21. This question is a short free-response question. Show your work for each part of the question. (10 points, suggested time 15 minutes)

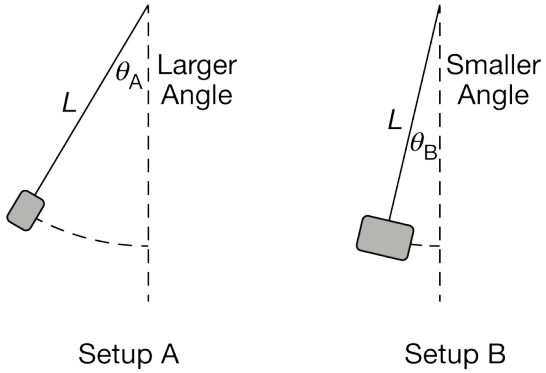

Note: Figures not drawn to scale.

Students construct two experimental setups A and B, as shown above. Each setup consists of a small block attached to a string with negligible mass and length L. The block in setup A is less massive than the block in setup B. The tops of the strings are fixed in place. The blocks are held so that the strings make different angles θ_A (theta A) and θ_B (theta B) with the vertical, where $\theta_A > \theta_B$. The blocks are then released from rest.

(a) Consider the instant in each block's motion when the string is vertical. Is the speed of the block at this instant greater for setup A, greater for setup B, or the same for both setups?

(b) The tension in the string is the same for both setups when the strings are vertical. In a clear, coherent, paragraph-length response, do the following.

Explain your reasoning for your response to part (a).
Explain why the string tension could be the same for both setups when the strings are vertical.

You do not need to show mathematically that the tensions are equal. You only need to provide reasoning for why they could be equal.

chapter1partc

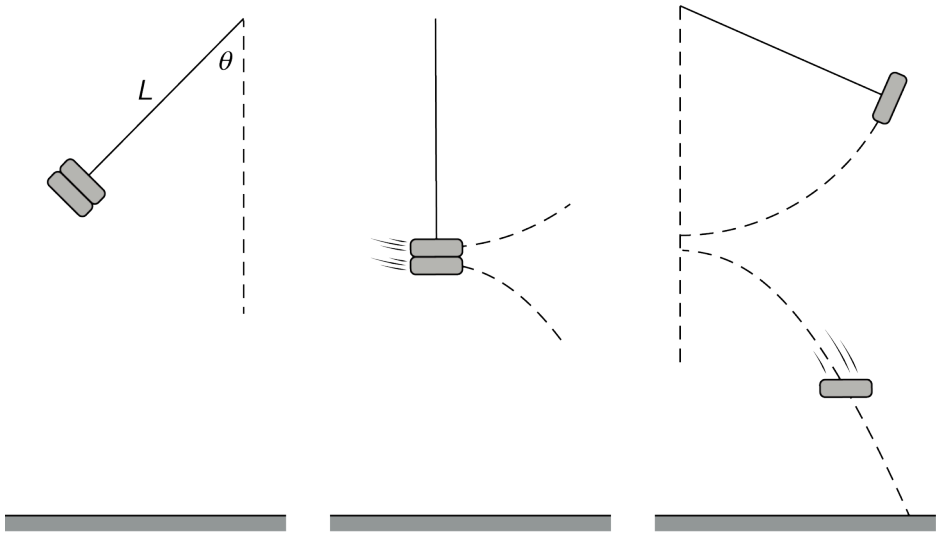

Note: Figures not drawn to scale.

Another experimental setup is created, this time with two blocks of equal mass that are taped together, as shown above at left. When the string is vertical, as shown above center, the tape fails and the bottom block separates from the top block and falls to the floor. The top block is still attached to the string and reaches the highest point of its swing before the bottom block reaches the floor, as shown above at right.

(c) Consider the time interval from immediately after the tape fails to the instant the top block reaches the highest point of its swing. Is there a system that includes one or more of the objects listed below for which the total mechanical energy of the system is constant during this interval? If so, write the object or objects in the system from the list below. If there is no such system using the objects listed below, indicate “no such system.” Briefly explain your reasoning.

The top block
The bottom block
Earth

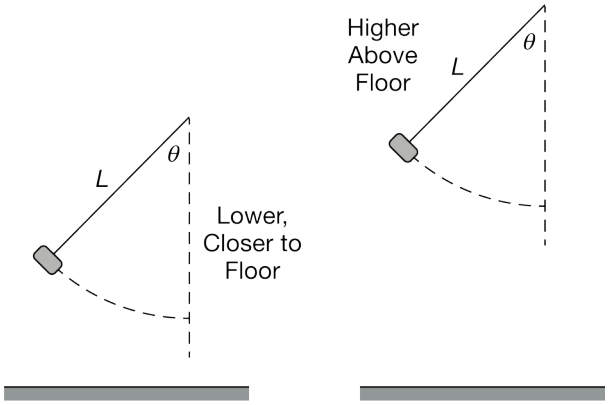

Note: Figures not drawn to scale.

chapter1partc

Now two experimental setups are constructed that use strings of the same length L and identical blocks. The strings are at the same initial angle from the vertical when each block is released, as shown above. However, one of the setups is positioned higher above the floor. This time, the string in each setup breaks when it is vertical, as shown below in the middle figure for one setup. Each block then falls to the floor, as shown at right below.

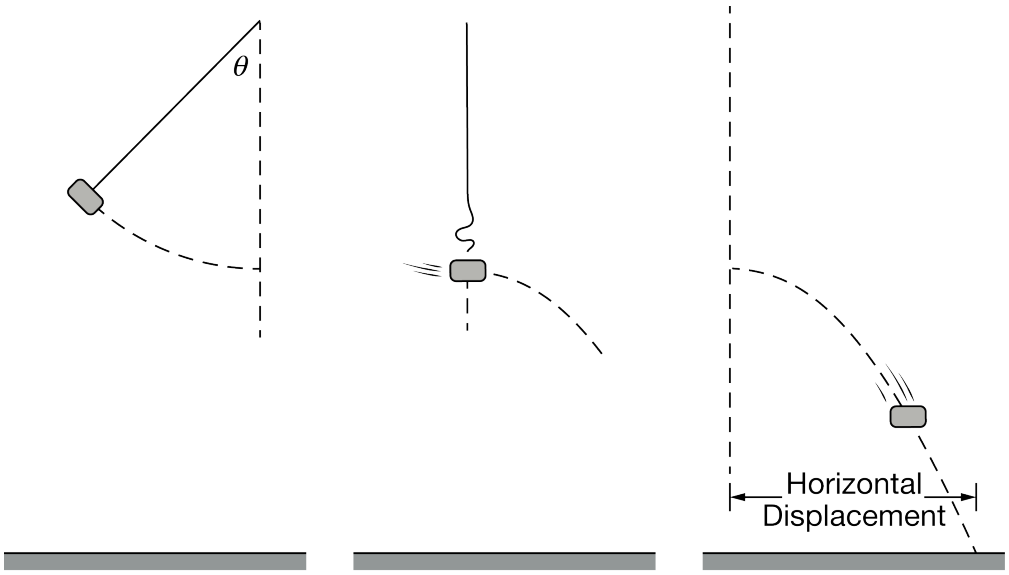

Note: Figures not drawn to scale.

(d) Is the horizontal displacement, from where the string breaks to where the block hits the floor, greater for the block that was closer to the floor, greater for the block that was higher above the floor, or the same for both blocks? Briefly explain your reasoning.

Part A

Select a point value to view scoring criteria, solutions, and/or examples and to score the response.

0	1 ✓

The response accurately includes:

- ☐ 1 point is earned for indicating that the speed is greater for the block in setup A than in setup B.

Part B

Select a point value to view scoring criteria, solutions, and/or examples and to score the response.

chapter1partc

0	1	2	3	4	5 ✓

The response accurately includes **all** of the following criteria.

- ☐ 1 point is earned for indicating that, with a larger release angle in setup A, there is a larger change in height or gravitational potential energy.
- ☐ 1 point is earned for indicating that a greater change in potential energy means greater kinetic energy or speed at the bottom (The mass does not affect the speed).
- ☐ 1 point is earned for indicating that either circular motion, centripetal acceleration, or centripetal force is relevant,
  OR
  For indicating that one of the equations v^2/r or mv^2/r is relevant.
- ☐ 1 point is earned for indicating that a faster speed means a greater acceleration (v^2/r) or greater centripetal force (mv^2/r) AND that a smaller mass means less centripetal or net force (mv^2/L) OR less tension ($mg + mv^2/L$)
  OR
  the converse arguments for slower speed and larger mass.
- ☐ 1 point is earned for a logical, relevant, and internally consistent argument that addresses the required argument or question asked in the first OR second bullet, and follows the guidelines described in the published requirements for the paragraph-length response.

Example Response:

Setup A has the block with the greatest change in height, and the block-Earth system with the greatest change in gravitational potential energy, and so has the greatest change in block kinetic energy at the bottom. This means that the system with the larger release angle has a block with the larger speed at the bottom. Acceleration at the bottom of the swing is centripetal acceleration since the block is traveling in a circle, and centripetal acceleration is proportional to v squared over r. Since the length of the string is the same in both cases, the block with the bigger speed has the larger acceleration. However, tension is equal to $mg + mv^2/L$, so although the block in setup A has the larger speed, it has a smaller mass, so the effects of the smaller mass and the larger angle could cancel and make the tensions equal.

Part B – Alternate Solution for the first two points in (b) using tangential force or acceleration

Select a point value to view scoring criteria, solutions, and/or examples and to score the response.

0	1	2 ✓

*The response accurately includes **both** of the following criteria.*

- ☐ *1 point is earned for stating that with equal string lengths and a greater initial angle mass A experiences a greater initial acceleration.*

chapter1partc

- *1 point is earned for stating that the greater initial angle therefore means mass A has a greater velocity at the bottom.*

Part B – Alternate Solution for the first two points in (b) using period/time and distance

Select a point value to view scoring criteria, solutions, and/or examples and to score the response.

0	1	2 ✓

*The response accurately includes **both** of the following criteria.*

- *1 point is earned for indicating that the period or the time to the bottom is the same for both setups.*
- *1 point is earned for indicating that since the time is the same and the distance traveled is longer for Setup A, the speed at the bottom is greater for Setup A*
  ***Note:** The response must indicate the same time to earn the 2nd point.*

Part C

Select a point value to view scoring criteria, solutions, and/or examples and to score the response.

0	1	2 ✓

The response accurately includes **both** of the following criteria.

- 1 point is earned for indicating any of the following systems:
  · Top block and Earth
  · Bottom block and Earth
  · Top block, bottom block, and Earth
  Note: The response needs to list only ONE of these to earn the point.
- 1 point is earned for a correct explanation in terms of work, and/or forces.
  Note: The second point is still earned if the response correctly describes the conditions for constant mechanical energy but chooses an incorrect system.

Example Response:

The system that includes the top block and the earth has a constant mechanical energy during this interval. No external forces on this system along the direction of motion.

Part D

Select a point value to view scoring criteria, solutions, and/or examples and to score the response.

Correct answer: The horizontal displacement is greater for the block that was higher above the floor.

chapter1partc

0	1	2 ✓

The response accurately includes **both** of the following criteria.

- ☐ 1 point is earned for indicating that the velocity or horizontal component of velocity is the same for both blocks when the strings break.
- ☐ 1 point is earned for indicating that the block that is higher above the floor falls for a greater amount of time.

Example Response:

The horizontal displacement is greater for the block that was higher above the floor because both block-Earth systems have the same change in gravitational potential energy, so both blocks have the same change in kinetic energy while swinging and the same speed at launch. The one launched from higher spends more time in the air, and so travels further horizontally.

Scoring note: If the conclusion about displacement is incorrect, the response earns a maximum of 1 point for part (d).

chapter1partc

22.

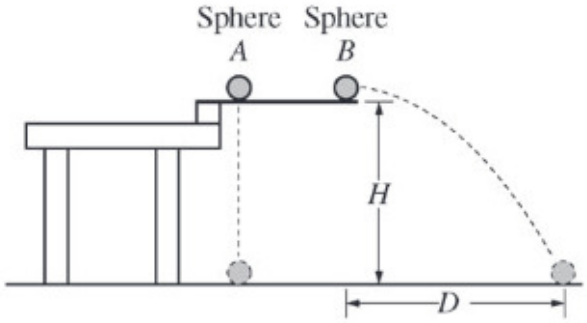

Two identical spheres are released from a device at time t = 0 from the same height H, as shown above. Sphere A has no initial velocity and falls straight down. Sphere B is given an initial horizontal velocity of magnitude v_0 and travels a horizontal distance D before it reaches the ground. The spheres reach the ground at the same time t_f, even though sphere B has more distance to cover before landing. Air resistance is negligible.

(a) The dots below represent spheres A and B. Draw a free-body diagram showing and labeling the forces (not components) exerted on each sphere at time $\frac{t_f}{2}$.

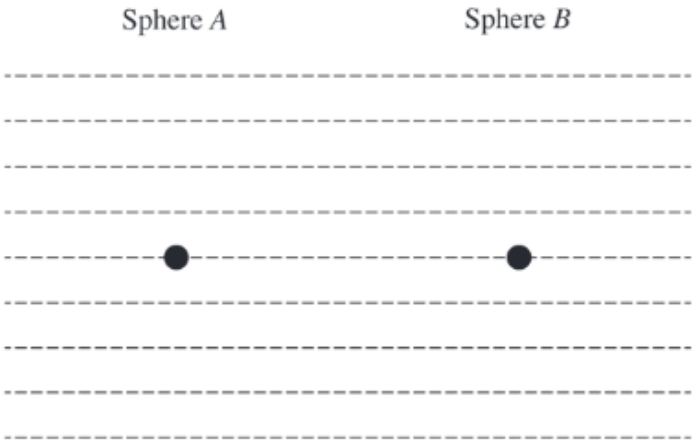

(b) On the axes below, sketch and label a graph of the horizontal component of the velocity of sphere A and of sphere B as a function of time.

chapter1partc

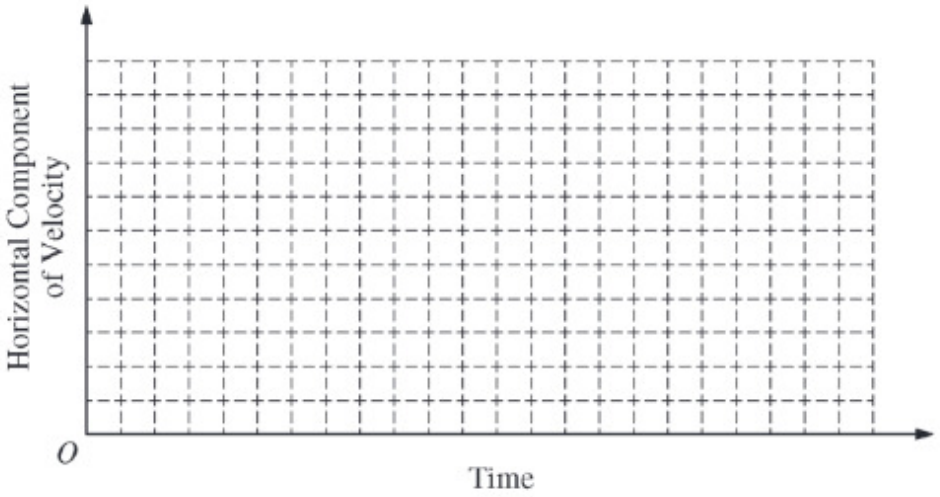

(c) In a clear, coherent, paragraph-length response, explain why the spheres reach the ground at the same time even though they travel different distances. Include references to your answers to parts (a) and (b).

Part A

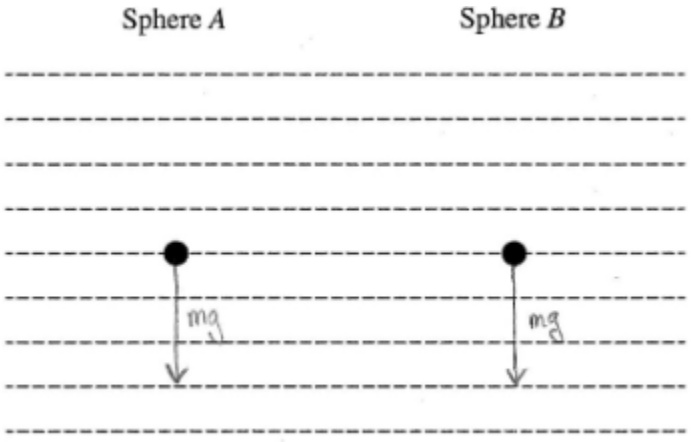

1 point is earned: For sketching only one force pointing straight down from each sphere and indicating that this force represents the force of gravity

0	1 ✓

The student response earns all of the following points:

chapter1partc

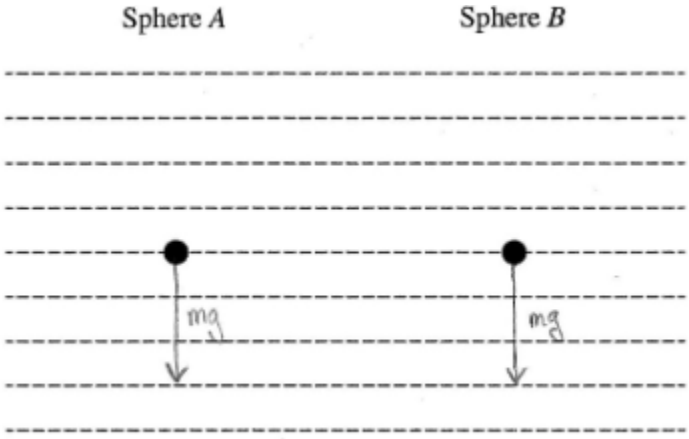

1 point is earned: For sketching only one force pointing straight down from each sphere and indicating that this force represents the force of gravity

Part B

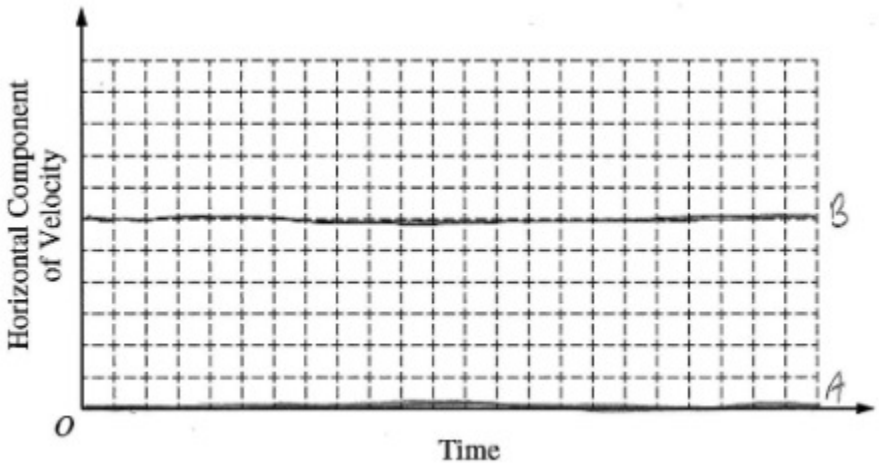

1 point is earned: For sketching a horizontal line at zero velocity for sphere *A*, and sketching a horizontal line at some non-zero velocity for sphere ***B***

0	1 ✓

The student response earns all of the following points:

chapter1partc

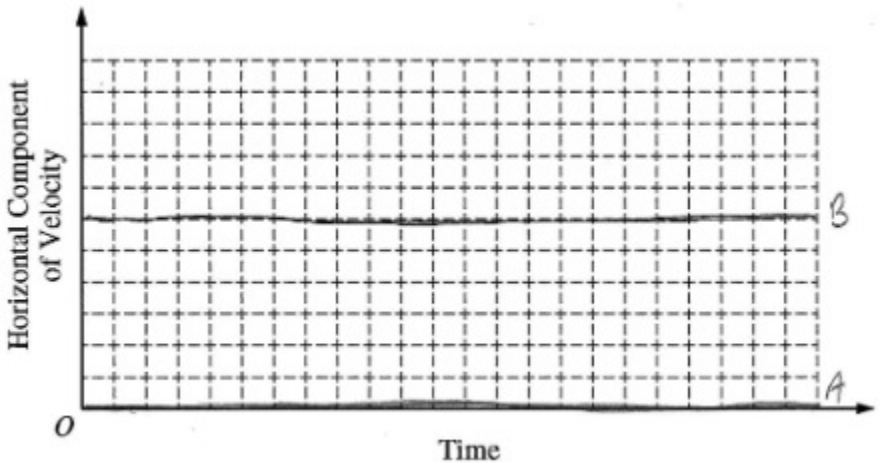

1 point is earned: For sketching a horizontal line at zero velocity for sphere *A*, and sketching a horizontal line at some non-zero velocity for sphere ***B***

Part C

1 point is earned: For indicating that the difference in horizontal motion does not affect the vertical motion of the spheres

1 point is earned: For indicating that both spheres start with the same vertical velocity

1 point is earned: For indicating that both spheres have the same vertical acceleration

1 point is earned: For indicating that falling the same height would take the same time

1 point is earned: For no incorrect or irrelevant statements

0	1	2	3	4	5 ✓

The student response earns all of the following points:

1 point is earned: For indicating that the difference in horizontal motion does not affect the vertical motion of the spheres

1 point is earned: For indicating that both spheres start with the same vertical velocity

1 point is earned: For indicating that both spheres have the same vertical acceleration

1 point is earned: For indicating that falling the same height would take the same time

1 point is earned: For no incorrect or irrelevant statements

chapter1partc

23. This question is a short free-response question. Show your work for each part of the question. (10 points, suggested time 15 minutes)

A class of physics students is investigating projectile motion using a variety of equipment. Assume air resistance can be ignored in all cases.

One group constructs a long ramp as shown in Ramp 1 below. In their experiment, they release a disk from the left side of the ramp and allow the disk to launch off the right side. The ramp is smooth enough that friction can be ignored. The left side of the ramp is supported by the top of a shelf, and the other side is supported by the top of a desk. The left and right sides of the ramp are at angles θ_{L} and θ_{R1} with the horizontal respectively.

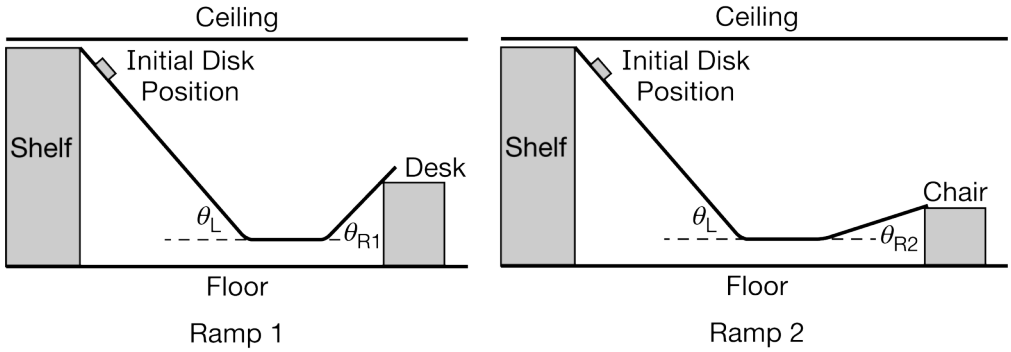

Note: Figures not drawn to scale.

The students release a disk and measure the maximum height it reaches after leaving the right side of the ramp. The students then adjust the ramp so that $\theta_{\mathrm{R2}} < \theta_{\mathrm{R1}}$ and the height of the right side of the ramp is lower as shown in the Ramp 2 configuration above. Assume the length of the right section of the ramp is the same in both cases.

(a) Will the disk launched from Ramp 2 reach a maximum height that is greater than, less than, or equal to the maximum height reached by the disk launched from Ramp 1? Justify your answer.

chapter1partc

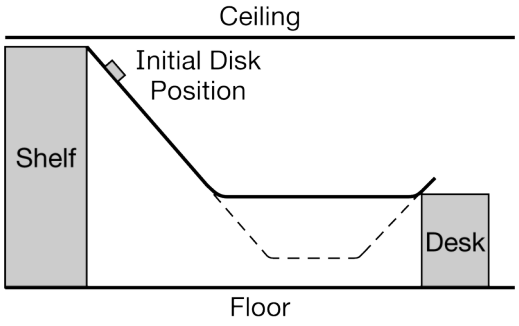

Ramp 3

Note: Figure not drawn to scale.

Finally, the students adjust the ramp into the configuration labeled Ramp 3 above in which the horizontal section of the ramp is at a greater height than in Ramp 1, which is represented by the dotted line. The students release the disk on Ramp 3.

(b) On which ramp, Ramp 1 or Ramp 3, if either, does the disk spend more time on the horizontal section of the ramp before launching off the right side? Explain your answer.

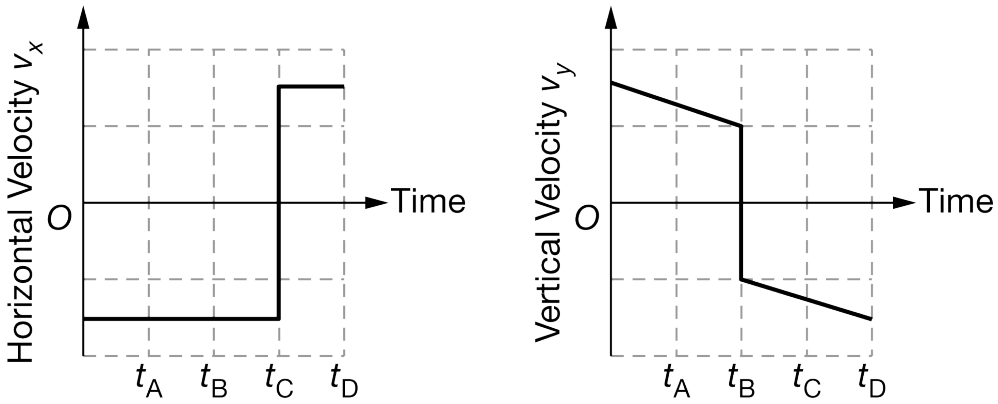

One group uses a device that can launch a steel ball. The group launches the ball and it bounces off the ceiling, floor, and wall several times though not necessarily in that order. Each collision can be modeled as elastic, and friction between the ball and the surfaces is negligible. The graphs above show the horizontal and vertical components of the velocity of the ball during some time interval in the ball's motion. The positive direction is taken to be upward.

(c) During the time interval shown in the graphs, the ball has two collisions. In a clear, coherent, paragraph-length response, identify the times when these collisions occur using the times indicated on the graph, and explain how you know whether each collision is with the wall, the ceiling, or the floor.

Part A

Select a point value to view scoring criteria, solutions, and/or examples and to score the response.

chapter1partc

0	1	2 ✓

The response accurately includes **both** of the following criteria.

- ☐ 1 point is earned for indicating that the disk has a greater speed as it leaves the right end of ramp 2 because more potential energy was converted to kinetic energy.
- ☐ 1 point is earned for stating that disk on ramp 2 will not go as high because it will have less potential energy (or disk on ramp 1 has more potential energy) due to conservation of mechanical energy
  OR
  For stating that disk on ramp 2 will not go as high because disk on ramp 2 has a lower initial vertical velocity (or disk on ramp 1 has a higher initial vertical velocity).

Example Response:

The disk has a greater speed when leaving the right end of ramp 2. A greater speed and smaller launch angle means that the horizontal velocity component at launch is greater for the disk on ramp 2. So the disk launched form ramp 2 will have a greater kinetic energy at the apex, and therefore less potential energy (in the disk-Earth system) and a lower height.

Part B

Select a point value to view scoring criteria, solutions, and/or examples and to score the response.

0	1	2	3 ✓

The response accurately includes **all** of the following criteria.

- ☐ 1 point is earned for indicating that the speed of the disk on the flat section is less for ramp 3 since less potential energy has been converted to kinetic energy.
- ☐ 1 point is earned for indicating the flat section of the ramp is longer in ramp 3, so there is a greater distance to travel.
- ☐ 1 point is earned for concluding that since the speed on the flat section of ramp 3 is less and the distance is greater, the time must be greater as well.

Example Response:

For ramp 3, the change in potential energy of the disk-Earth system is less, so the disk has less kinetic energy and thus less speed on the flat section. Since the flat section of ramp 3 is also longer, and the disk is moving more slowly, the disk will spend more time on the flat section of ramp 3 than on the flat section of ramp 1.

Part C

Select a point value to view scoring criteria, solutions, and/or examples and to score the response.

chapter1partc

0	1	2	3	4	5 ✓

The response accurately includes **all** of the following criteria.

- ☐ 1 point is earned for correctly identifying the collision with the ceiling at time t_B.
- ☐ 1 point is earned for indicating that a collision with the ceiling will exert a force on the ball, accelerating it
  OR
  For saying that the force changes the vertical velocity of the ball
  OR
  For saying that the direction of the vertical velocity changes.
- ☐ 1 point is earned for correctly identifying the collision with a wall at time t_C.
- ☐ 1 point is earned for indicating that a collision with the wall will exert a force on the ball, accelerating it
  OR
  For saying that the force changes the horizontal velocity of the ball
  OR
  For saying that the direction of the horizontal velocity changes.
- ☐ 1 point is earned for a logical, relevant, and internally consistent argument that addresses the required argument or question asked, and follows the guidelines described in the published requirements for the paragraph-length response.

Example Response:

Each surface exerts a normal force; thus, the ceiling and floor exert vertical forces and the walls exert horizontal forces. When a net force is applied, there is an acceleration and a change in velocity. Thus, when there is a horizontal force exerted by the wall there is a change in the horizontal velocity, which happens at time t_C, so, the ball collides with the wall at t_C. When the vertical velocity changes from positive to negative at time t_B, there is a downward force, which only happens when the ball collides with the ceiling. So, the ball collides with the ceiling at t_B.

chapter1partc

24. This question is a short free-response question. Show your work for each part of the question. (10 points, suggested time 15 minutes)

A class of physics students is investigating projectile motion using a variety of equipment. Assume air resistance can be ignored in all cases.

One group constructs a long ramp as shown in Ramp 1 below. In their experiment, they release a disk from the left side of the ramp and allow the disk to launch off the right side. The ramp is smooth enough that friction can be ignored. The left side of the ramp is supported by the top of a shelf, and the other side is supported by the top of a desk. The left and right sides of the ramp are at angles θ_{L1} and θ_{R} with the horizontal respectively.

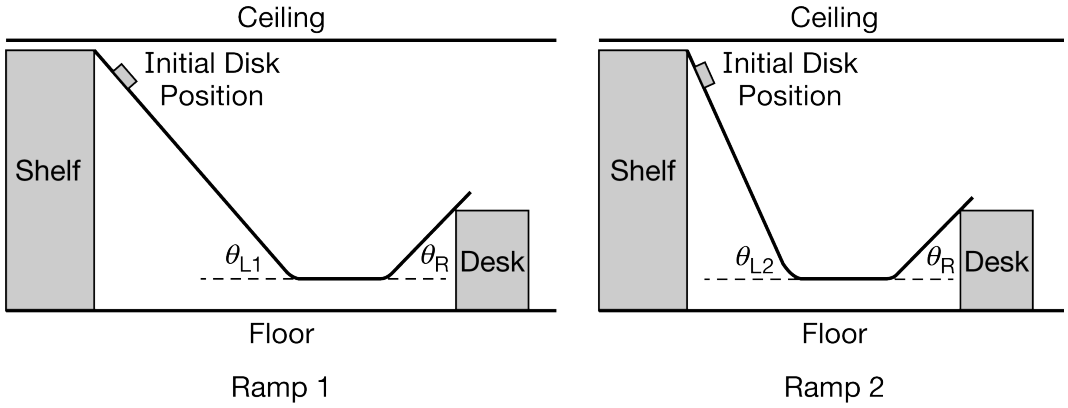

Note: Figures not drawn to scale.

The students release a disk from Ramp 1 and measure the maximum height it reaches after leaving the right side of the ramp. The students then increase the angle of the left ramp so that $\theta_{\mathrm{L1}} < \theta_{\mathrm{L2}}$, and they keep the top of the ramp against the shelf as shown in the Ramp 2 configuration above so that the disk is released at the same height.

(a) Will the disk launched from Ramp 2 reach a maximum height that is greater than, less than, or equal to the maximum height reached by the disk launched from Ramp 1? Justify your answer.

chapter1partc

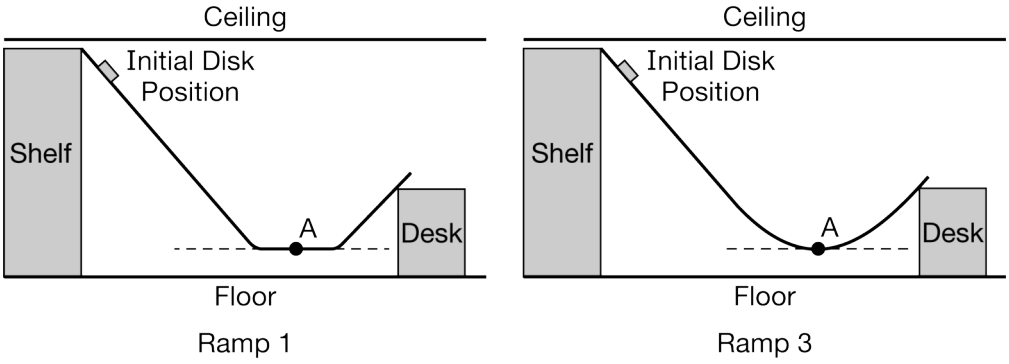

Note: Figures not drawn to scale.

Next, the students adjust the ramp into the configuration labeled Ramp 3 in which the lowest part of the ramp has been shaped into a circular curve. The lowest point of Ramp 3 is at the same height as the lowest section of Ramp 1. Both ramps are shown above.

(b) On which ramp, Ramp 1 or Ramp 3, is the force exerted by the ramp on the disk at point A greater? Explain your answer.

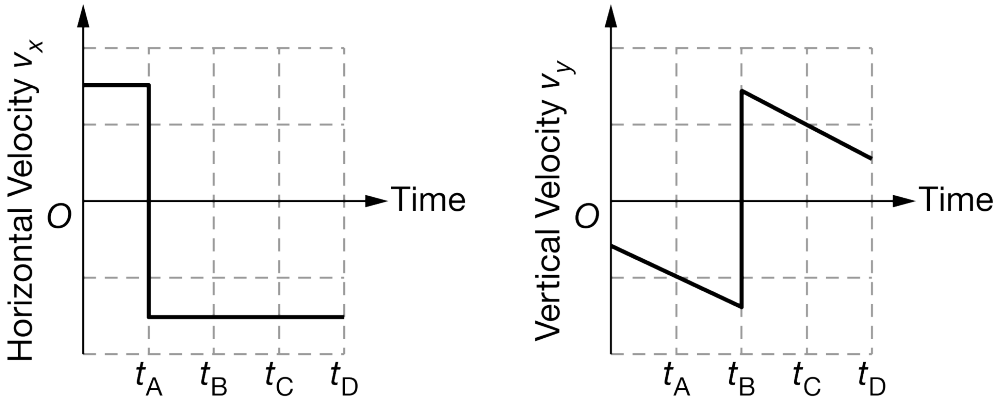

Another group uses a device that can launch a steel ball. The group launches the ball and it bounces off the ceiling, floor, and wall several times though not necessarily in that order. Each collision can be modeled as elastic, and friction between the ball and the surfaces is negligible. The graphs above show the horizontal and vertical components of the velocity of the ball during some time interval in the ball's motion. The positive direction is taken to be upward.

(c) During the time interval shown in the graphs, the ball has two collisions. In a clear, coherent, paragraph-length response, identify the times when each of these collisions occur using the times indicated on the graph, and explain how you know whether each collision is with the wall, the ceiling, or the floor.

Part A

Select a point value to view scoring criteria, solutions, and/or examples and to score the response.

chapter1partc

0	1	2 ✓

The response accurately includes **both** of the following criteria.

- ☐ 1 point is earned for indicating that the disk has the same speed (or kinetic energy) as it leaves the right end of both ramps because the energy of the disk-Earth system is conserved.
- ☐ 1 point is earned for indicating that the vertical component of the velocity at the right end is the same, since both are launched at the same angle, so the disk reaches the same maximum height for both ramps.

Example Response:

The disk has the same change in height as it travels from the left end to the right end of the ramp, so the same amount of potential energy is converted to kinetic energy. Thus, the disk leaves the right end of both ramps at the same speed. Since it also leaves at the same angle, it will travel the same projectile path and have the same maximum height in both cases.

Part B

Select a point value to view scoring criteria, solutions, and/or examples and to score the response.

0	1	2	3 ✓

The response accurately includes **all** of the following criteria.

- ☐ 1 point is earned for indicating that at point A on ramp 1, the block is moving at a constant velocity, so the net force is zero. Thus, the force by ramp 1 is equal to the disk's weight.
- ☐ 1 point is earned for indicating that at point A on ramp 3, the disk is moving in a circular path and thus has an upward net force.
- ☐ 1 point is earned for concluding that at point A on ramp 3, the normal force must be greater than the disk's weight, and thus greater than it was on ramp 1.

Example Response:

The disk on ramp 1 is traveling at constant velocity on the flat section. Thus, the normal force is equal to the weight of the disk. The disk on ramp 3 is executing circular motion, with an upward acceleration. Thus, the net force must be upward, and thus the normal force on ramp 3 is greater than the disk's weight. Thus, the normal force exerted on the block is greater for ramp 3.

Part C

Select a point value to view scoring criteria, solutions, and/or examples and to score the response.

chapter1partc

0	1	2	3	4	5 ✓

The response accurately includes **all** of the following criteria.

- ☐ 1 point is earned for correctly identifying the collision with a wall at time t_A.
- ☐ 1 point is earned for indicating that a collision with the wall will exert a force on the ball, accelerating it
  OR
  For indicating that the force changes the horizontal velocity of the ball
  OR
  For indicating that there is a change in the direction of the horizontal velocity.
- ☐ 1 point is earned for correctly identifying the collision with the floor at time t_B.
- ☐ 1 point is earned for For indicating that a collision with the floor will exert a force on the ball, accelerating it
  OR
  For indicating that the force changes the vertical velocity of the ball
  OR
  For indicating that there is a change in the direction of the vertical velocity.
- ☐ 1 point is earned for a logical, relevant, and internally consistent argument that addresses the required argument or question asked, and follows the guidelines described in the published requirements for the paragraph-length response.

Example Response:

Each surface exerts a normal force; thus, the ceiling and floor exert vertical forces and the walls exert horizontal forces. When a net force is applied, there is an acceleration and a change in velocity. Thus, when there is a horizontal force by the wall there is a change in the horizontal velocity, which happens at time t_A, so the ball collides with the wall at t_A. When the vertical velocity changes from negative to positive at time t_B, there is an upward force, which only happens when the ball collides with the floor. So, the ball collides with the floor at t_B.

chapter1partc

25. This question is a short free-response question. Show your work for each part of the question. (10 points, suggested time 15 minutes)

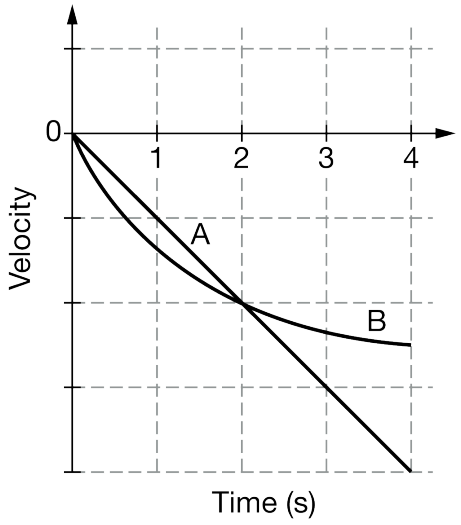

Two identical objects, A and B, move along straight, parallel, horizontal tracks. The graph above represents the velocity as a function of time for the two objects.

(a) Indicate which of the two objects, if either, has a decreasing speed during the time interval shown. If neither object has a decreasing speed, indicate this explicitly. Briefly explain your answer.

(b) Indicate at approximately which time or times, if any, the objects are moving at the same speed. If the objects are never moving with the same speed during the interval shown, indicate this explicitly. Briefly explain your answer.

(c) For which object, if either, is the magnitude of the net work done on it greater for the time interval shown? If the net work has the same magnitude for both objects, indicate this explicitly.

(d) In a clear, coherent paragraph-length response, explain your response to part (c).

Part A

Select a point value to view scoring criteria, solutions, and/or examples and to score the response.

0	1	2 ✓

The response accurately includes **both two** of the following criteria.

- ☐ 1 point is earned for a statement that neither object has a decreasing speed during the time interval shown.
- ☐ 1 point is earned for a justification that includes that since this is a velocity vs. time graph that the

chapter1partc

velocity is increasing in absolute value (or the speed is increasing) with increasing time for both objects.

Example Response:

Neither object is slowing down during the interval shown. For both objects the velocity is increasing as the time increases.

Part B

Select a point value to view scoring criteria, solutions, and/or examples and to score the response.

0	1	✓ 2

The response accurately includes **both two** of the following criteria.

- ☐ 1 point is earned for a statement that at $t = 2$ s the objects are moving with the same speed.
- ☐ 1 point is earned for a justification that includes that the two objects have the same speed when the velocity vs. time graphs cross.

Example Response:

The two objects are moving at the same speed at $t = 2$ s*, where the velocity vs. time graphs cross.*

Part C

Select a point value to view scoring criteria, solutions, and/or examples and to score the response.

0	✓ 1

The response accurately includes

- ☐ 1 point is earned for a statement that includes that more work is done on object A.

Example Response:

Greater net work is done on object A during the time interval shown.

Part D

Select a point value to view scoring criteria, solutions, and/or examples and to score the response.

chapter1partc

0	1	2	3	4	5 ✓

The response accurately includes **all** of the following criteria.

- ☐ 1 point is earned for a statement that includes that the work done is equal to the change in kinetic energy of the object $W = \Delta K$.
- ☐ 1 point is earned for a statement that includes that both objects start from rest.
- ☐ 1 point is earned for a statement that object A reaches a greater final speed.
- ☐ 1 point is earned for a statement that because A reaches a greater final speed, it has a greater change in kinetic energy and so a greater work done on it.
- ☐ 1 point is earned for a logical, relevant, and internally consistent argument that addresses the required argument or question asked, and follows the guidelines described in the published requirements for the paragraph-length response.

Example Response:

A greater net work is done on the object that has a greater change in kinetic energy. The identical objects start from rest, so the object that has the greatest final kinetic energy has the greatest net work done on it. Object A reaches the greater final speed, so it has the greatest change in kinetic energy and the greatest work done on it during the time interval shown.

Part D - alternate solution

Select a point value to view scoring criteria, solutions, and/or examples and to score the response.

0	1	2	3	4	5 ✓

*The response accurately includes **all** of the following criteria.*

- ☐ *1 point is earned for indicating that the work done is equal to the force times the displacement $W = Fd$.*
- ☐ *1 point is earned for indicating that the displacement is larger for object A because the area under the velocity vs. time for object A is larger.*
- ☐ *1 point is earned for correctly indicating that the average force for object A is larger.*
- ☐ *1 point is earned for indicating that object A has the greater average acceleration in the time period.*
- ☐ *1 point is earned for a logical, relevant, and internally consistent argument that addresses the required argument or question asked, and follows the guidelines described in the published requirements for the paragraph-length response.*

Example Response:

chapter1partc

The net work done can be found by multiplying the average force by the displacement. Object A has the larger displacement because the area under the curve for object A is larger, and the area under the velocity vs. time curve is the displacement. In addition, the average force for object A is larger. The average acceleration for object A is larger as it has the larger change in velocity during the time period indicated on the graph. Since both objects have the same mass, Newton's second law indicates that Object A would have the larger average force. Because object A has the larger average force and the larger displacement, object A must have the greater work done in it during the period shown.