chapter1partc

1. This question is a short free-response question. Show your work for each part of the question. (10 points, suggested time 15 minutes)

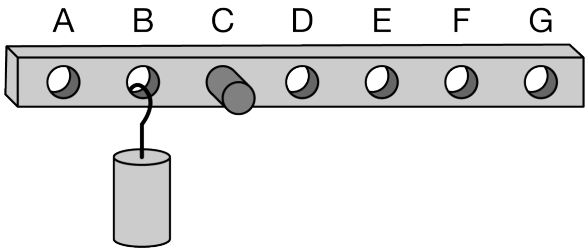

A uniform bar, of mass M, with seven evenly spaced holes is held by sliding the bar over a horizontal peg through one of the seven holes. The peg passes through hole C, and a cylinder hangs from a hook placed through hole B as shown above. The mass of the bar is equal to the mass of the cylinder, and the location of the center of mass of the bar is at the center of hole D. In this configuration, the bar-cylinder system remains motionless but is free to rotate around the peg in hole C. Frictional forces acting on the bar are negligible.

(a) Two additional cylinders, identical to the one shown, can each be hung on the bar by hooks from any of the open holes so that the bar will still be in rotational equilibrium when all three cylinders are hanging from it. From which two holes should the two cylinders be hung? Briefly explain your reasoning.

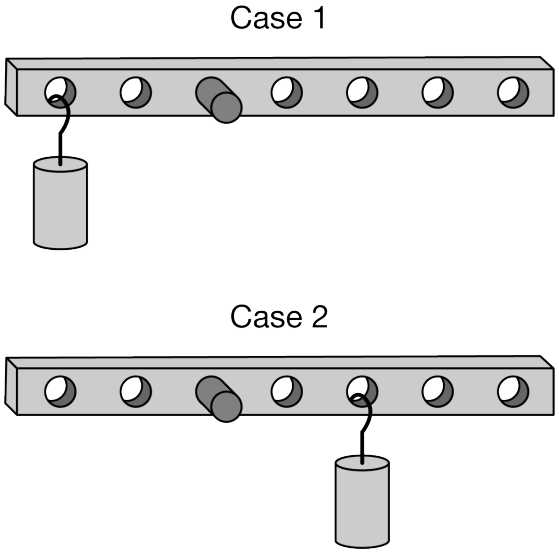

The cylinder is moved to hang from hole A as shown in Case 1 above. The bar is released, and its resulting angular acceleration is recorded. Then the cylinder is moved to hang from hole E, as shown in Case 2 above. Again, the bar is released, and its resulting angular acceleration is recorded.

(b) Is the magnitude of the initial angular acceleration of the bar-cylinder system in Case 1 larger than, smaller than, or equal to the magnitude of the initial angular acceleration of the bar-cylinder system in Case 2? In a clear, coherent, paragraph-length response, explain your reasoning.

chapter1partc

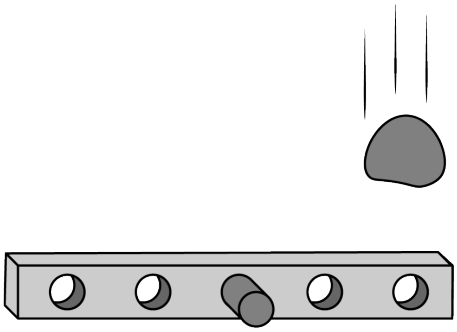

In a new scenario, a different uniform bar is held by a horizontal peg as shown above. The bar is initially motionless but is free to rotate around the peg with negligible friction. A ball of clay is dropped onto the bar in the position shown. The clay collides with and sticks to the bar.

(c) During this collision, is the linear momentum of the clay-bar system constant? Justify your answer.

(d) During this collision, is the angular momentum of the bar about an axis through the center of the bar constant? Justify your answer.

chapter1partc

2. This question is a short free-response question. Show your work for each part of the question. (10 points, suggested time 15 minutes)

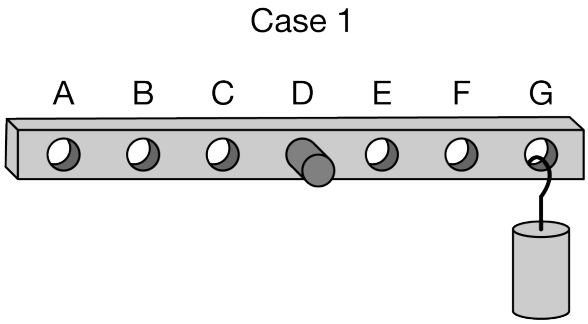

A uniform bar, of mass M, with seven evenly spaced holes is held by sliding the bar over a horizontal peg through one of the seven holes. The peg passes through hole D, and a cylinder hangs from a hook placed through hole G as shown above. The mass of the bar is the same as the mass of the cylinder, and the location of the center of mass of the bar is at the center of hole D. In this configuration, the bar-cylinder system is not in rotational equilibrium and is free to rotate about the peg in hole D. Frictional forces acting on the bar are negligible.

(a) Two additional cylinders, identical to the one shown, can each be hung on the bar by hooks from any of the open holes so that the bar will be in rotational equilibrium when all three cylinders are hanging from it. From which two holes should the two cylinders be hung? Briefly explain your reasoning.

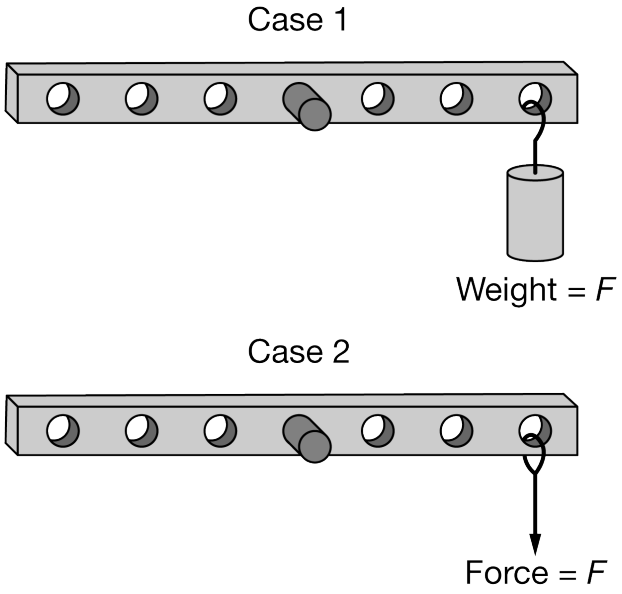

The bar is returned to its original setup, Case 1, in which the cylinder has weight F, as shown above. The bar is released, and its resulting angular acceleration is recorded. Then in Case 2, the weight is replaced by a string, as shown above. A downward force of magnitude F, equal to the weight of the hanging cylinder, is exerted on the string. The resulting angular acceleration of the bar is recorded.

(b) Is the magnitude of the initial angular acceleration of the bar-cylinder system in Case 1 larger than, smaller

than, or equal to the magnitude of the initial angular acceleration of the bar in Case 2? In a clear, coherent, paragraph-length response, explain your reasoning.

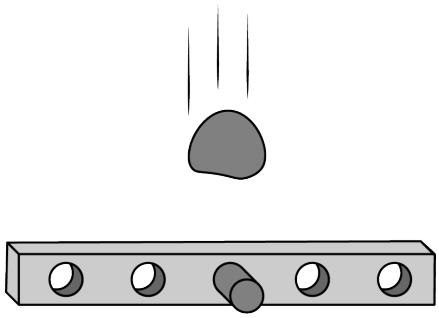

In a new scenario, a different uniform bar is held by a horizontal peg as shown above. The bar remains motionless but is free to rotate around the peg with negligible friction. A lump of clay is dropped onto the bar in the position shown. The clay collides with and sticks to the bar.

(c) During this collision, is the kinetic energy of the clay-bar system constant? Justify your answer.

(d) During this collision, is the angular momentum of the clay-bar system about an axis through the center of the bar constant? Justify your answer.

chapter1partc

3. This question is a short free-response question. Show your work for each part of the question. (10 points, suggested time 15 minutes)

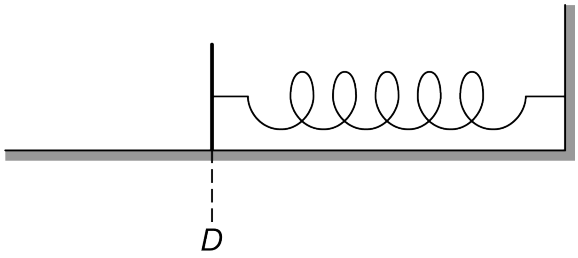

Figure 1. Spring at Relaxed Length

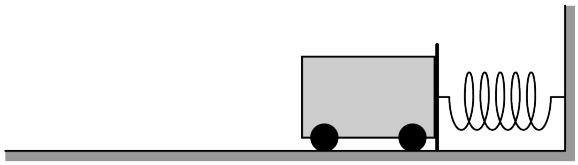

Figure 2. Cart Held Against Plate

Students intend to use a cart-spring system to study motion. A vertical plate with negligible mass is attached to a horizontal spring of spring constant k. When the spring is at its relaxed length, the plate is at position D as indicated in Figure 1 above. A cart is glued to the plate. The cart is initially held so that the spring is compressed as shown in Figure 2 above. The maximum force the glue can exert is $F_{\max}$. Assume friction is negligible.

The students plan to release the cart from rest so that the cart oscillates. They discuss whether the cart could detach from the plate during the cart's motion if the glue is not strong enough. One student makes the following claim:

"The cart could never detach from the plate because the cart and the plate exert equal and opposite forces on each other, so the forces on the cart add to zero."

(a) Which underlined phrase or phrases are ***correct***, if either? If neither phrase is ***correct***, write "none."

(b) Which underlined phrase or phrases are ***incorrect***, if either? If neither phrase is ***incorrect***, write "none."

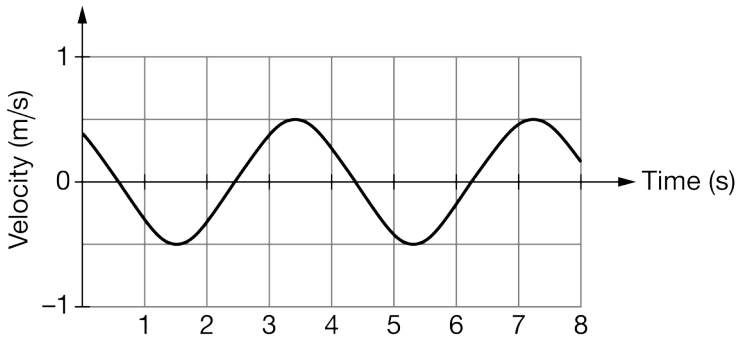

The cart is removed, and the plate is coated with very strong glue. The cart rolls to the right with positive velocity

v_{cart}, collides with and sticks to the plate, and then oscillates back and forth at the end of the spring. The graph above shows the velocity of the cart as a function of time after it has completed several oscillations.

(c) Explain how this graph could be used to find the maximum compression of the spring as it oscillates.

(d) The plate of negligible mass is replaced with a plate with mass similar to the cart's mass, and the collision is repeated. Again, the cart moves with velocity v_{cart}, collides with and sticks to the plate, and oscillates back and forth. In a clear, coherent paragraph-length response, explain how a graph of the cart's velocity as a function of time would differ from the one shown above if the plate's mass were not negligible. Provide a physical reason why each difference would occur.

chapter1partc

4. This question is a short free-response question. Show your work for each part of the question. (10 points, suggested time 15 minutes)

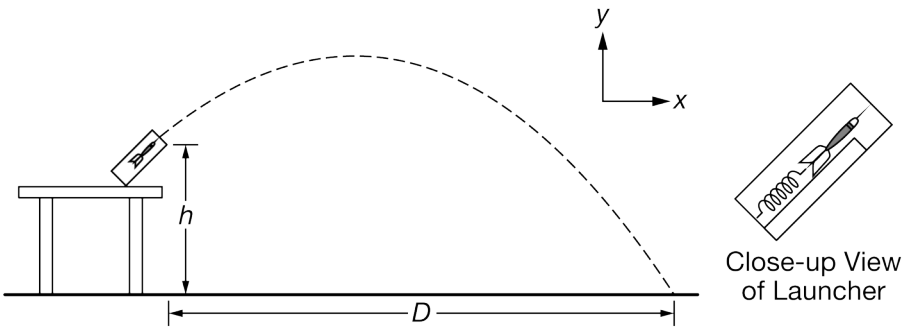

A launcher is used to launch a dart with initial speed v from a table at an angle, as shown above. The dart exits the end of the launcher at a height h above the floor and lands a horizontal distance D from the end of the launcher. A close-up view is included that shows the dart in the launcher immediately before being launched. Inside the launcher, the dart rests on a platform with negligible friction, and a compressed spring is released to push the dart out of the launcher. Assume air resistance is negligible.

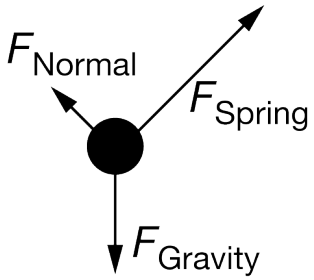

(a) A diagram of the forces exerted on the dart while it is being launched is shown above. Describe what changes would need to be made to the diagram to make it a correct diagram for the dart when it is in the air (after it has left the launcher but before it has reached the ground). Assume air resistance is negligible.

The three graphs shown below represent properties of the motion of the dart from the instant it is launched at time $t = 0$ until immediately before it hits the floor at time t_f.

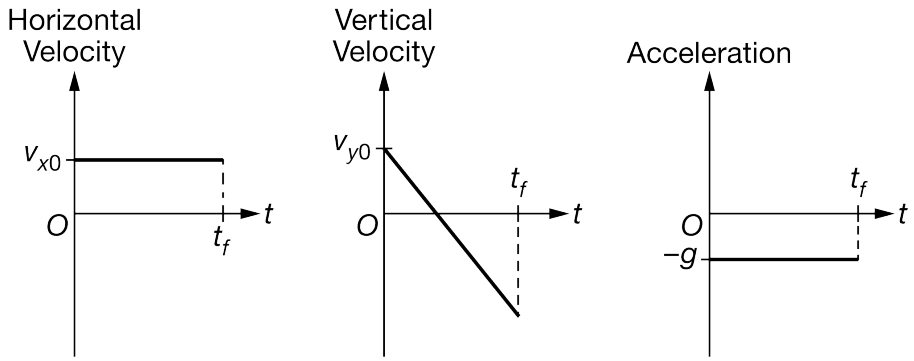

(b) Assuming the values of v_{x0}, v_{y0}, t_f, and g are known, which of the above graphs could lead to a determination of the distance D, and how could a student use the chosen graph to determine D ?

(c) After the dart passes the highest point of its trajectory, the angle between the velocity vector of the dart and the horizontal (the x-axis) continues to increase until the dart strikes the ground. In a clear, coherent, paragraph-length response, explain the following:

- why the angle between the dart's velocity and the horizontal continues to increase and
- why, no matter how large the height h of the end of the launcher is, the angle between the dart's velocity and the horizontal can never be 90 degrees.

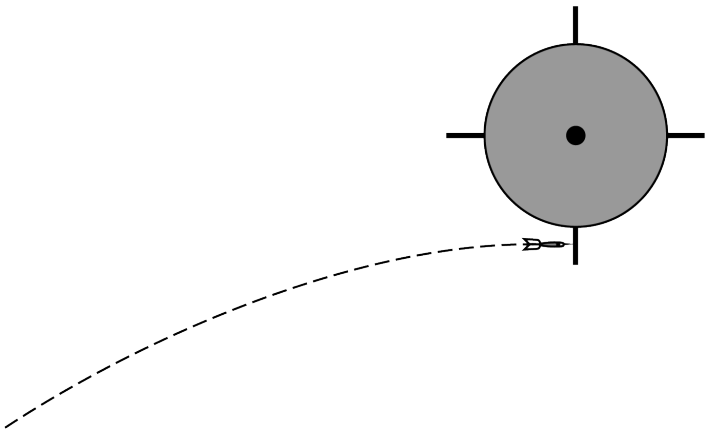

The dart is now launched so that it collides and sticks to a wheel at the instant its velocity is completely horizontal, as shown above. The wheel is free to rotate about a pivot at its center that has negligible friction.

(d) Indicate whether the linear momentum of the dart-wheel system will be constant during the collision. Justify your answer.

chapter1partc

5. This question is a short free-response question. Show your work for each part of the question. (10 points, suggested time 15 minutes)

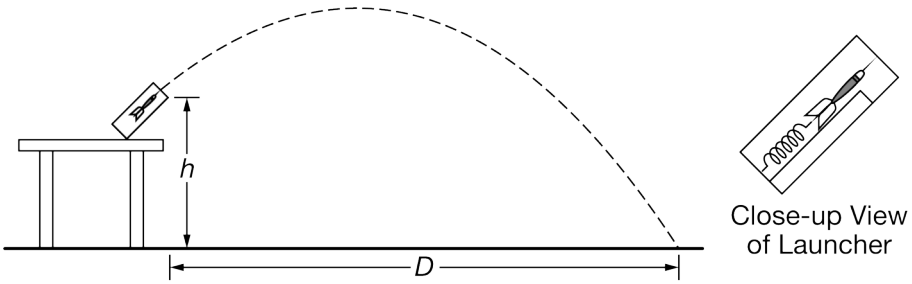

A launcher is used to launch a dart with initial speed v from a table at an angle, as shown above. The dart exits the end of the launcher at a height h above the floor and lands a horizontal distance D from the end of the launcher. A close-up view is included that shows the dart in the launcher immediately before being launched. Inside the launcher, the dart rests on a platform with negligible friction, and a compressed spring is released to push the dart out of the launcher. Assume air resistance is negligible.

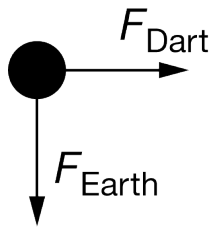

(a) A student creates the incorrect diagram shown above of the forces exerted on the dart at an instant in time after it has been launched but before it reaches the floor. Indicate what aspect of the diagram is incorrect. Assume air resistance is negligible.

A student produces the three possibly incorrect graphs shown below representing properties of the motion of the dart after it is launched.

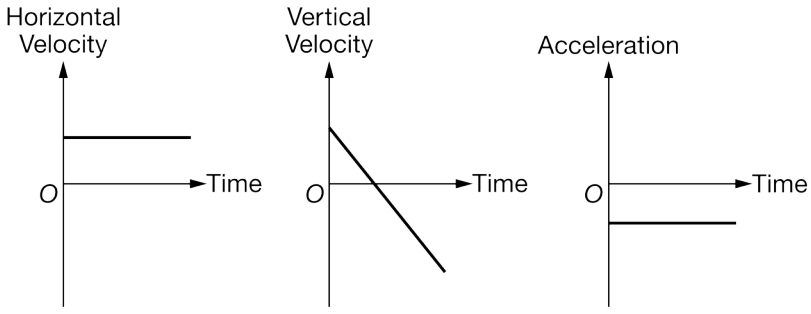

(b) Another student claims that the horizontal velocity graph is not correct because the dart is accelerating, and therefore the horizontal velocity is not constant. Is the student's claim valid? Justify your answer.

(c) From the instant the dart is launched until it reaches the highest point in its trajectory, the magnitude of the dart's velocity decreases. In a clear, coherent, paragraph-length response, explain the following:

chapter1partc

why the magnitude of the dart's velocity decreases until the dart reaches its highest point and why the magnitude of the dart's velocity does not decrease to zero.

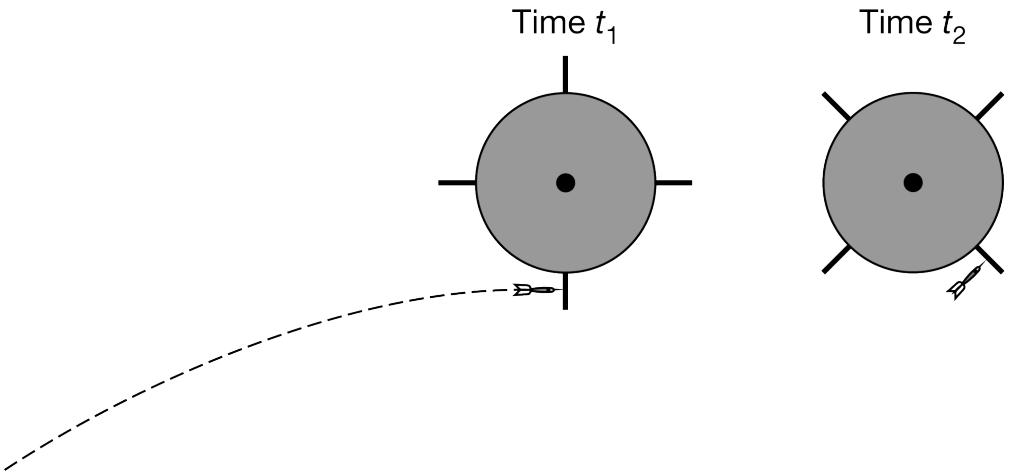

The dart is now launched so that it collides with and sticks to a wheel at time t_1, which is the instant the dart's velocity is completely horizontal, as shown above at left. The wheel is initially at rest and is free to rotate about a pivot at its center that has negligible friction. A short time later, at time t_2, the dart-wheel system is still rotating in a counterclockwise direction, as shown above at right.

(d) At time t_2, is the angular speed of the dart-wheel system about the pivot increasing, decreasing, or constant? Justify your answer.

chapter1partc

6. This question is a short free-response question. Show your work for each part of the question. (10 points, suggested time 15 minutes)

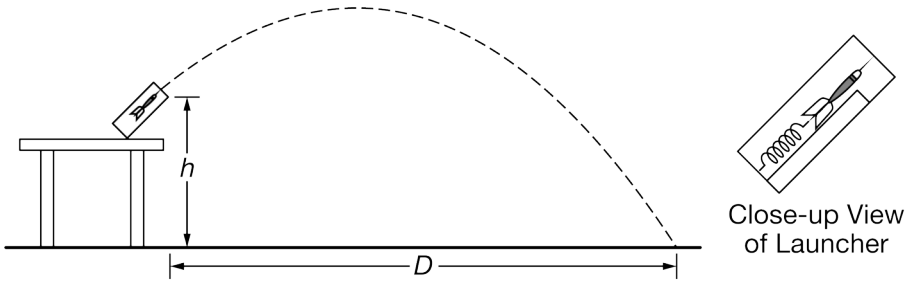

A launcher is used to launch a dart with initial speed v from a table at an angle, as shown above. The dart exits the end of the launcher at a height h above the floor and lands a horizontal distance D from the end of the launcher. A close-up view is included that shows the dart in the launcher immediately before being launched. Inside the launcher, the dart rests on a platform with negligible friction, and a compressed spring is released to push the dart out of the launcher. Assume air resistance is negligible.

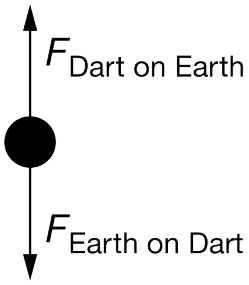

(a) A student creates the incorrect diagram shown above of the forces exerted on the dart at an instant in time after it has been launched but before it reaches the floor. Indicate what aspect of the diagram is incorrect. Assume air resistance is negligible.

The three graphs shown below represent properties of the motion of the dart from the instant it is launched at time $t = 0$ until immediately before it hits the floor at time t_f.

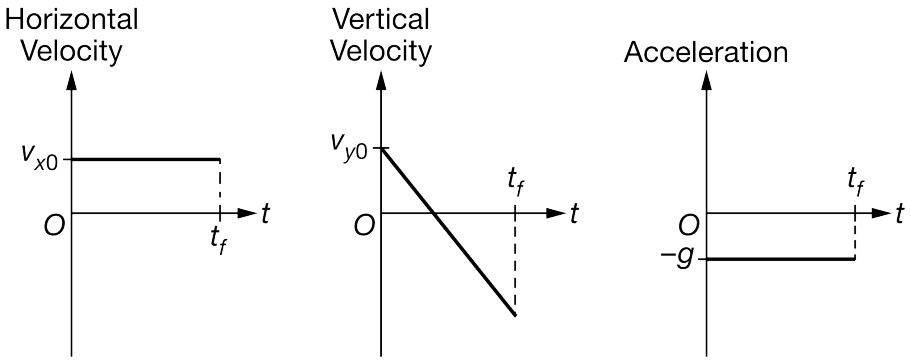

(b) Assuming the values of v_{x0}, v_{y0}, t_f, and g are known, which of the above graphs could lead to a

determination of the height h, and how could a student use the chosen graph to determine h ?

(c) After the dart passes the highest point of its trajectory, the angle between the velocity vector of the dart and the acceleration vector of the dart decreases until the dart strikes the ground. In a clear, coherent, paragraph-length response, explain the following:

- why the angle between the dart's velocity and acceleration continues to decrease and
- why, no matter how large the height h of the end of the launcher is, the angle between the dart's velocity and acceleration can never reach zero degrees.

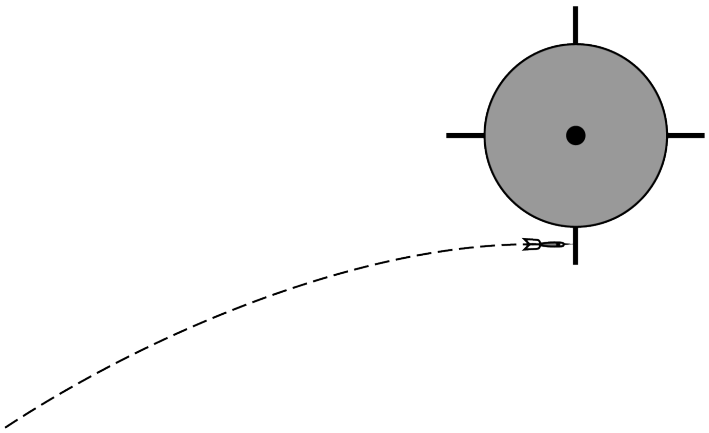

The dart is now launched so that it collides and sticks to a wheel at the instant its velocity is completely horizontal, as shown above. The wheel is free to rotate about a pivot at its center that has negligible friction.

(d) Indicate whether the angular momentum of the dart-wheel system about the pivot will be constant during the collision. Justify your answer.

chapter1partc

7. This question is a short free-response question. Show your work for each part of the question. (10 points, suggested time 15 minutes)

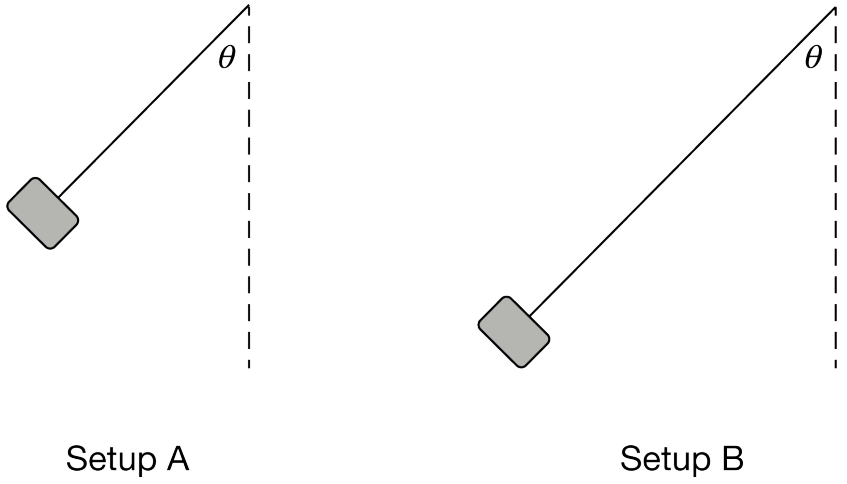

Setup A Setup B

Note: Figure not drawn to scale.

Students construct two experimental setups A and B, as shown above. Each setup consists of a small block of known mass M attached to a string of negligible mass, where the string in setup A is shorter than the string in setup B. The tops of the strings are fixed in place. The blocks are held so that the strings make an angle θ (theta) with the vertical. The blocks are then released from rest.

(a) The angular momentum of an object of mass m moving with speed v in a circle of radius r has a magnitude of mvr about the center of the circle. When the blocks are in motion and the strings are instantaneously vertical, is the magnitude of the angular momentum about the fixed end of the string greater for the block in setup A, greater for the block in setup B, or the same for both blocks?

(b) In a clear, coherent, paragraph-length response, explain your reasoning for your response to part (a).

chapter1partc

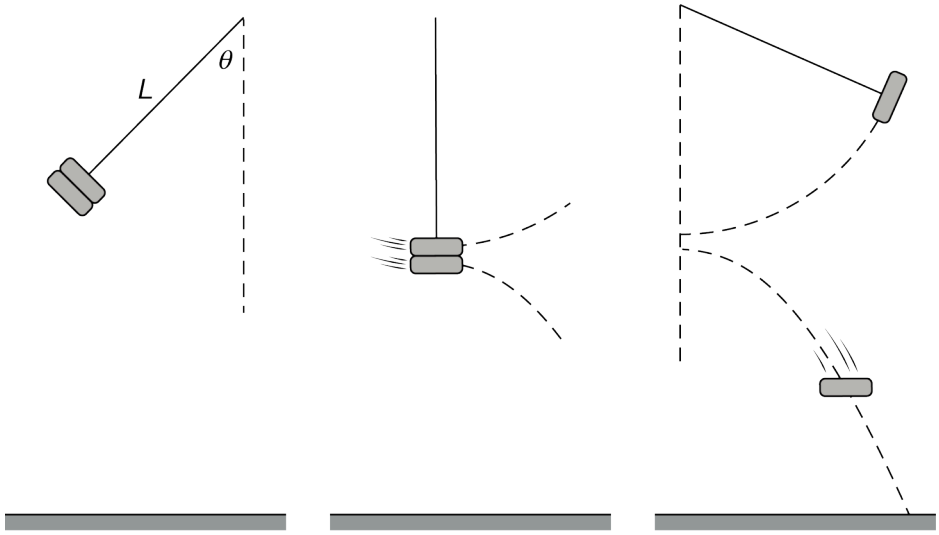

Note: Figures not drawn to scale.

Another experimental setup is created, this time with two blocks of equal mass that are taped together, as shown above at left. At the instant the string is vertical, as shown above center, the tape fails and the bottom block separates from the top block and falls to the floor. The top block is still attached to the string and reaches the highest point of its swing before the bottom block reaches the floor, as shown above at right.

(c) For the blocks-Earth system, is the total mechanical energy of the system the same immediately after the blocks are released as it is when the top block first reaches the highest point of its swing? Briefly explain your reasoning.

(d) Consider the top block and assume the size of the blocks is small compared to the length of the string so that the center of mass of the top block is not appreciably different from the center of mass of the original two blocks. Indicate which of the following time intervals is longer, if either. If the intervals are the same, write “the same.” Briefly explain your reasoning.

Interval 1: The time interval from when the blocks are initially released to when the string is vertical
Interval 2: The time interval from when the string is vertical to when the top block reaches the highest point of its swing

chapter1partc

8. This question is a short free-response question. Show your work for each part of the question. (10 points, suggested time 15 minutes)

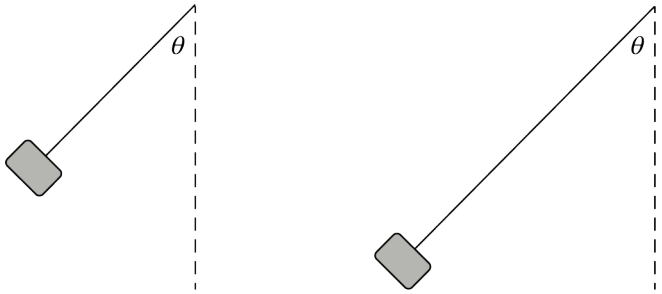

Setup A Setup B

Note: Figures not drawn to scale.

Students construct two experimental setups A and B, as shown above. Each setup consists of a small block of known mass M attached to a string of negligible mass, where the string in setup A is shorter than the string in setup B. The tops of the strings are fixed in place. The blocks are held so that the strings make an angle θ (theta) with the vertical. The blocks are then released from rest.

(a) Consider the instant in each block's motion when the string is vertical. Is the speed of the block at this instant greater for setup A, greater for setup B, or the same for both setups?

(b) The acceleration is the same for both blocks when the strings are vertical. In a clear, coherent, paragraph-length response, do the following.

Explain your reasoning for your response to part (a).
Explain why the acceleration could be the same for both blocks when the strings are vertical.

You do not need to show mathematically that the accelerations are equal. You only need to provide reasoning for why they could be equal.

chapter1partc

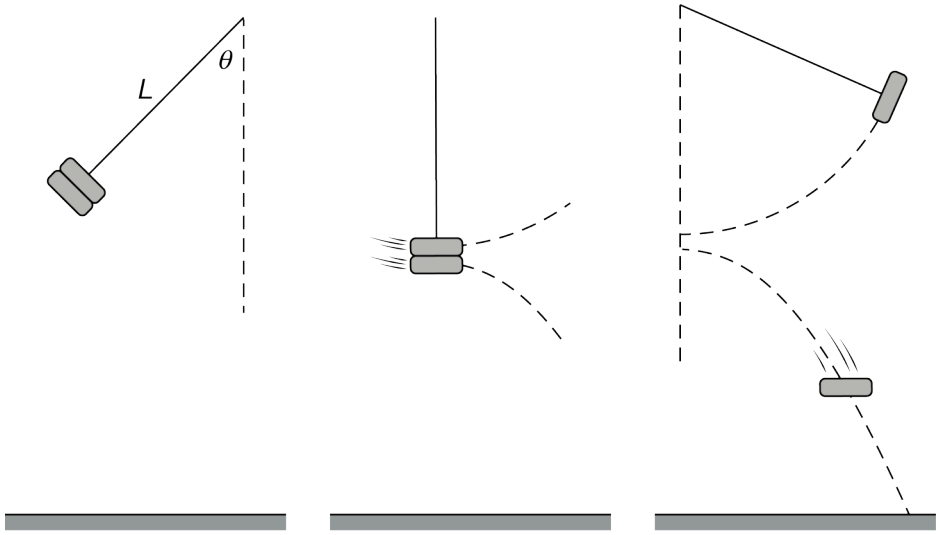

Note: Figures not drawn to scale.

Another experimental setup is created, this time with two blocks of equal mass that are taped together, as shown above at left. When the string is vertical, as shown above center, the tape fails and the bottom block separates from the top block and falls to the floor. The top block is still attached to the string and reaches the highest point of its swing before the bottom block reaches the floor, as shown above at right.

(c) For the system consisting of the two blocks only, and not Earth, in which of the following time intervals, if any, is the total mechanical energy of the system the same at the beginning and end of the interval? Be sure to indicate all time intervals that apply, or to write "none" if none of the time intervals apply. Briefly explain your reasoning.

Interval A: Immediately after the blocks are released to immediately before the tape fails
Interval B: Immediately before the tape fails to immediately after the tape fails
Interval C: Immediately after the tape fails to the instant the top block reaches its maximum height

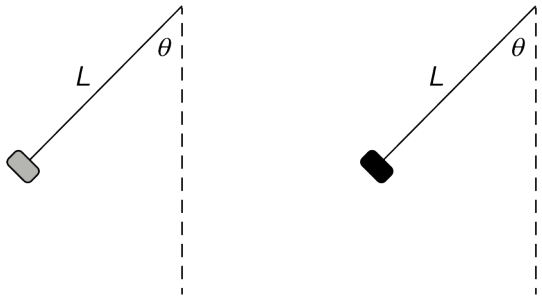

Note: Figures not drawn to scale.

Now two experimental setups are constructed that use strings of the same length and blocks of different masses. The strings are at the same initial angle from the vertical when each block is released, as shown above. The two setups are at the same height above the floor.

chapter1partc

This time, the string in each experiment breaks when it is vertical, as shown below in the middle figure for one experiment. Each block then falls to the floor, as shown at right below.

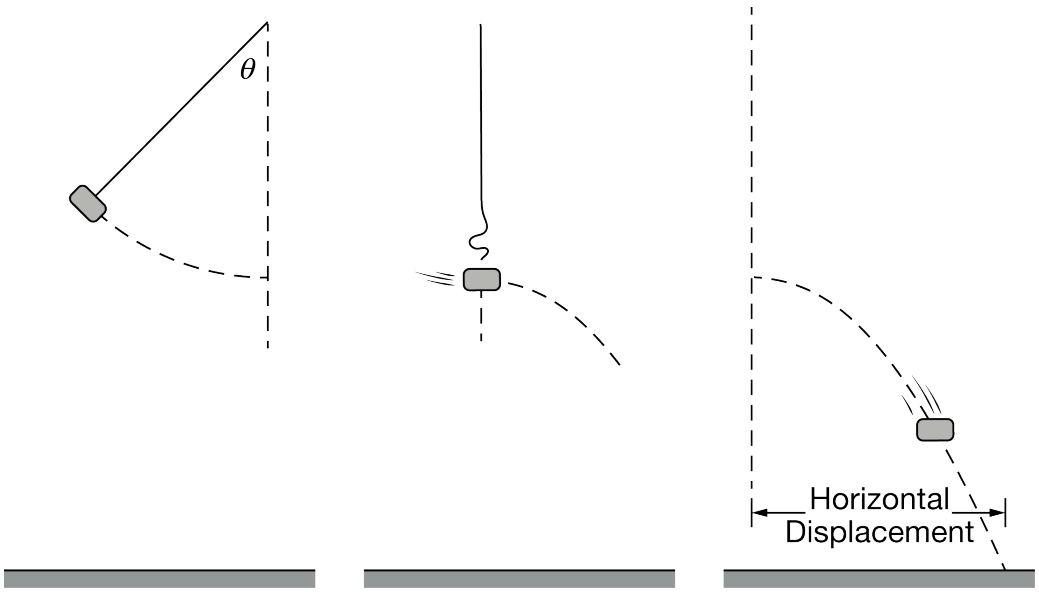

Note: Figures not drawn to scale.

(d) Is the horizontal displacement, from where the string breaks to where the block hits the floor, greater for the lighter block, greater for the heavier block, or the same for both blocks? Briefly explain your reasoning.

chapter1partc

9. This question is a short free-response question. Show your work for each part of the question. (10 points, suggested time 15 minutes)

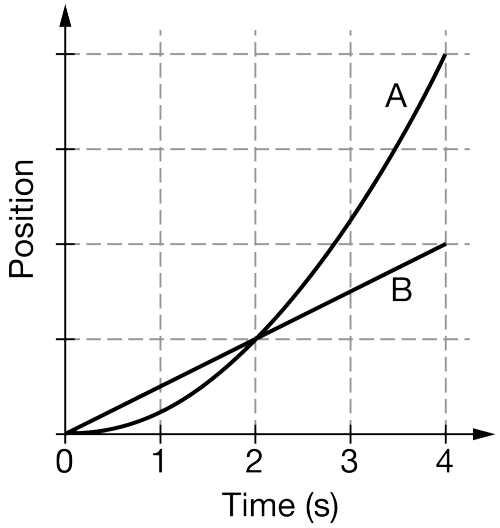

Two identical objects, A and B, move along straight, parallel, horizontal tracks. The graph above represents the position as a function of time for the two objects.

(a) At a time of 2 seconds, where the lines intersect, do the displacements of the two objects from their initial positions have the same magnitude? Briefly explain your answer.

(b) At a time of 2 seconds, where the lines intersect, do the velocities of the two objects have the same magnitude? Briefly explain your answer.

(c) At a time of 2 seconds, where the lines intersect, which object, if either, has a net force with a greater magnitude exerted on it? If the net force has the same magnitude for both objects, indicate this explicitly.

(d) In a clear, coherent paragraph-length response, explain your response to part (c). Be sure to reference and compare the graphed information for both objects A and B.

chapter1partc

10. This question is a short free-response question. Show your work for each part of the question. (10 points, suggested time 15 minutes)

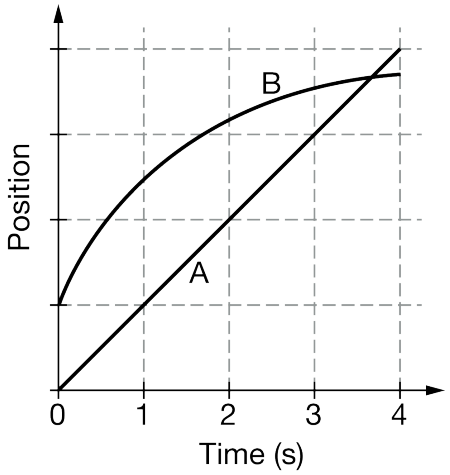

Two identical objects, A and B, move along straight, parallel, horizontal tracks. The graph above represents the position as a function of time for the two objects.

(a) At approximately which time or times, if any, are the objects moving at the same speed? If the objects are never moving with the same speed during the interval shown, indicate this explicitly. Briefly explain your answer.

(b) Describe what is happening to the positions of objects A and B between 3 seconds and 4 seconds.

(c) Which object, if either, has an acceleration with a greater magnitude during the time interval shown in the graph? If the accelerations have the same magnitude for both objects, indicate this explicitly.

(d) In a clear, coherent, paragraph-length response, explain your response to part (c). Be sure to reference and compare the graphed information for both objects A and B.

chapter1partc

11.

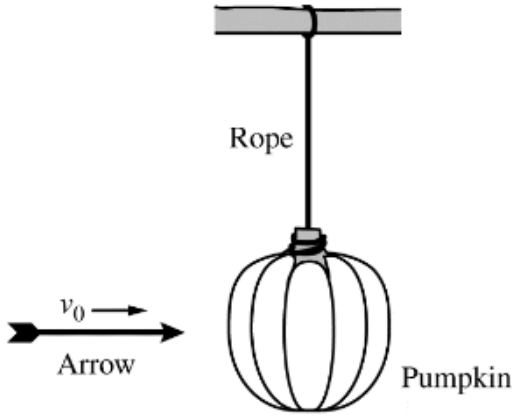

An archer tests various arrowheads by shooting arrows at a pumpkin that is suspended from a tree branch by a rope, as shown to the right. When struck head-on by the arrow, the pumpkin swings upward on the rope. The maximum angle θ that the rope makes with the vertical is different for each arrowhead that the archer tests. Each arrow, including its arrowhead, has the same mass m and is shot with the same velocity v_0 toward the right.

The arrowheads are made of different materials, however, and each behaves differently when it strikes the pumpkin, as described below.

- *Embedded arrow:* Strikes the pumpkin and remains embedded, while the pumpkin swings to angle θ_{emb}.
- *Pass arrow:* Passes all the way through the pumpkin and continues traveling away from the archer, while the pumpkin swings to angle θ_{pass}.
- Bounce arrow: Bounces off the pumpkin back toward the archer, while the pumpkin swings to angle θ_{bounce}.

a. Rank the three angles θ_{emb}, θ_{pass}, and θ_{bounce} from greatest to least in the spaces indicated below. Use "1" for the greatest angle, "2" for the next greatest, and so on. If any two or all three angles are the same, use the same number for their ranking.

_____θ_{emb} _____θ_{pass} _____θ_{bounce}

b. In a clear, coherent, paragraph-length response that may also contain figures and/or equations, justify your ranking.

chapter1partc

12. This question is a short free-response question. Show your work for each part of the question. (10 points, suggested time 15 minutes)

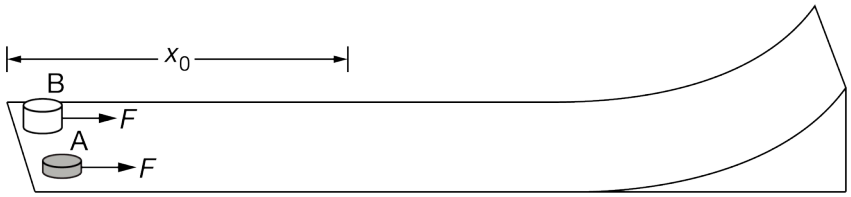

Two disks, A and B, are initially at rest at the left end of a track, as shown above. Disk B is more massive than disk A. The track has a horizontal section and then curves upward at the right end. The disks are each pushed to the right over a distance x_0 by identical constant horizontal forces of magnitude F. There is negligible friction between the track and the disks.

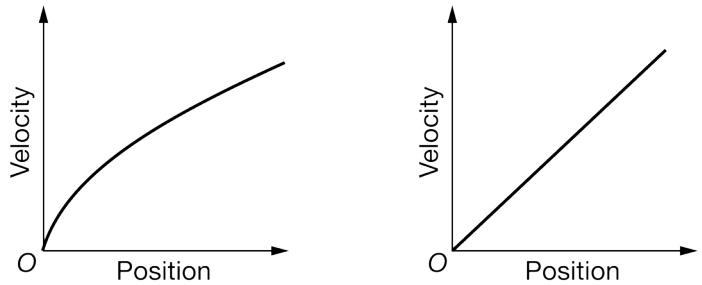

(a) Which of the graphs shown above correctly models the velocity of disk A as a function of position as it is being pushed by the force? Justify your answer.

(b) After sliding across the horizontal portion of the track, both disks slide partway up the curved section of the track. Identify which disk, if either, reaches a greater maximum height. If both disks reach the same maximum height, state this explicitly.

(c) In a clear, coherent paragraph-length response, justify your answer to part (b).

(d) Consider the case where friction is not negligible and the coefficient of kinetic friction between each disk and the track is the same. The disks are again pushed by the same force over the same distance, and each disk slides partway up the ramp. Identify which disk, if either, would reach a greater maximum height than the other in this case. If both disks reach the same maximum height in this case, state this explicitly. Briefly justify your answer.

chapter1partc

13. This question is a short free-response question. Show your work for each part of the question. (10 points, suggested time 15 minutes)

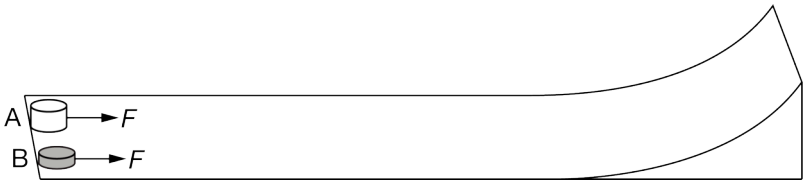

Two disks, A and B, are initially at rest at the left end of a track, as shown above. Disk A is more massive than disk B. The track has a horizontal section and then curves upward at the right end. The disks are simultaneously pushed to the right by identical, constant, horizontal forces of magnitude *F* for the same amount of time. The forces are removed before the disks reach the curved section of the track, and there is negligible friction between the track and the disks.

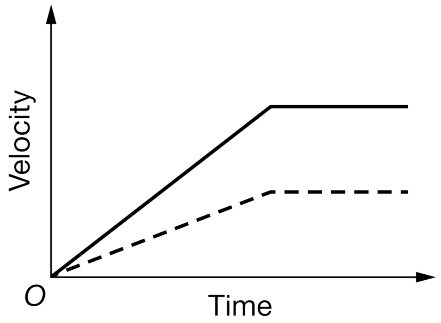

(a) The graph above shows the velocity of each disk as a function of time while the disks are moving on the horizontal section. Identify which disk's motion is represented by the solid line. Explain your reasoning.

(b) When the horizontal forces are removed, which disk, if either, has a greater momentum? If the disks have equal momentum, state this explicitly. Briefly justify your answer in terms of the impulse acting on each disk.

(c) After sliding across the horizontal section of the track, both disks slide partway up the curved section of the track. Identify which disk, if either, reaches a greater maximum height. If both disks reach the same maximum height, state this explicitly.

(d) In a clear, coherent, paragraph-length response, justify your answer to part (c).

chapter1partc

14. This question is a short free-response question. Show your work for each part of the question. (10 points, suggested time 15 minutes)



Two identical disks, X and Y, are initially at rest at the left end of a track, as shown above. The track has a horizontal section and then curves upward at the right end. The disks are pushed to the right over a distance x_0. Disk X is pushed by a horizontal force of magnitude F, and disk Y is pushed by a horizontal force of magnitude $2F$. There is negligible friction between the track and the disks.

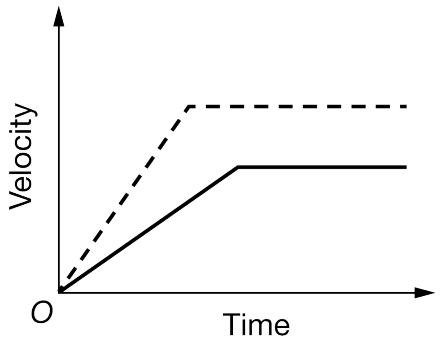

(a) The graph above shows the velocity of each disk as a function of time while both disks are on the horizontal section of the track. Identify which disk's motion is represented by the dashed line and explain your reasoning.

(b) After sliding across the horizontal portion of the track, both disks slide partway up the curved section of the track. Identify which disk, if either, reaches a greater maximum height. If both disks reach the same maximum height, state this explicitly.

(c) In a clear, coherent paragraph-length response, justify your answer to part (b).

(d) Consider the case where friction is not negligible and the coefficient of kinetic friction between each disk and the track is the same. Each disk is again pushed by the same force as in the original scenario over a distance x_0, and each disk slides partway up the ramp. Identify which disk, if either, would reach a greater maximum height than the other in this case. If both disks reach the same maximum height in this case, state this explicitly. Briefly justify your answer.

chapter1partc

15. This question is a short free-response question. Show your work for each part of the question. (10 points, suggested time 15 minutes)



Two identical disks, A and B, are initially at rest at the left end of a track, as shown above. The track has a horizontal section and then curves upward at the right end. The disks are simultaneously pushed to the right for the same amount of time. Disk A is pushed by a horizontal force of magnitude 2*F*, and disk B is pushed by a horizontal force of magnitude *F*. The forces are removed before the disks reach the curved section of the track, and there is negligible friction between the track and the disks.

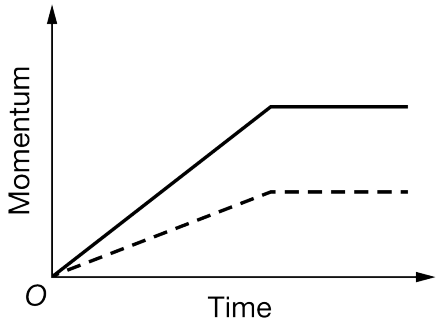

(a) The graph above shows the momentum of each disk as a function of time while the disks are moving horizontally. Identify which disk's motion is represented by the solid line. Explain your reasoning.

(b) During the time interval that the forces are exerted on the disks, which disk, if either, travels a greater distance along the horizontal section of the track? If the disks travel the same distance, state this explicitly. Briefly explain your answer.

(c) After sliding across the horizontal section of the track, both disks slide partway up the curved section of the track. Identify which disk, if either, reaches a greater maximum height. If both disks reach the same maximum height, state this explicitly.

(d) In a clear, coherent, paragraph-length response, justify your answer to part (c).

chapter1partc

16. This question is a short free-response question. Show your work for each part of the question. (10 points, suggested time 15 minutes)

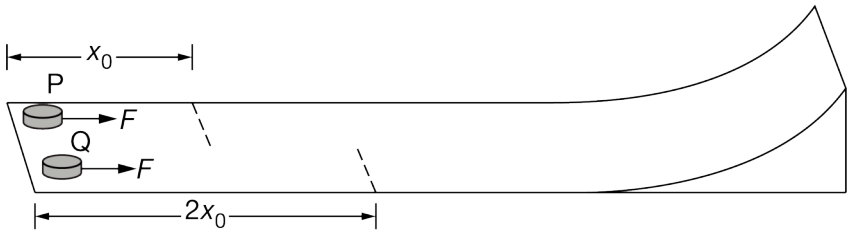

Two identical disks, P and Q, are initially at rest at the left end of a track, as shown above. The track has a horizontal section and then curves upward at the right end. The disks are each pushed to the right with a horizontal force with constant magnitude F. Disk P is pushed to the right for a distance of x_0, and disk Q is pushed to the right for a distance of $2x_0$. There is negligible friction between the track and the disks.

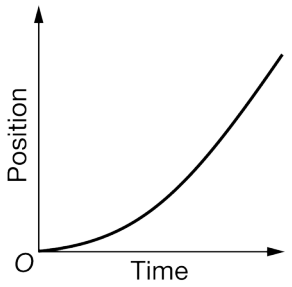

Graph 1

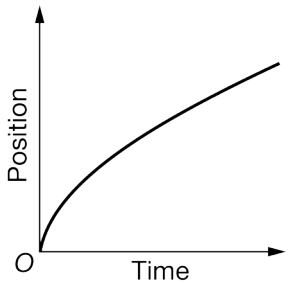

Graph 2

(a) The figure above shows two possible graphs of position as a function of time for disk P while it is being pushed along the horizontal section of the track. Which graph best represents the motion of disk P? Briefly justify your selection.

(b) After sliding across the horizontal portion of the track, both disks slide partway up the curved section of the track. Identify which disk, if either, reaches a greater maximum height. If both disks reach the same maximum height, state this explicitly.

(c) In a clear, coherent paragraph-length response, justify your answer to part (b).

(d) Consider the case where friction is not negligible and the coefficient of kinetic friction between each disk and the track is the same. Each disk is again pushed by the same force F over the same distance as in the original scenario, and each disk slides partway up the ramp. Identify which disk, if either, would reach a greater maximum height than the other disk in this case. If both disks reach the same maximum height in this case, state this explicitly. Briefly justify your answer.

chapter1partc

17. This question is a short free-response question. Show your work for each part of the question.

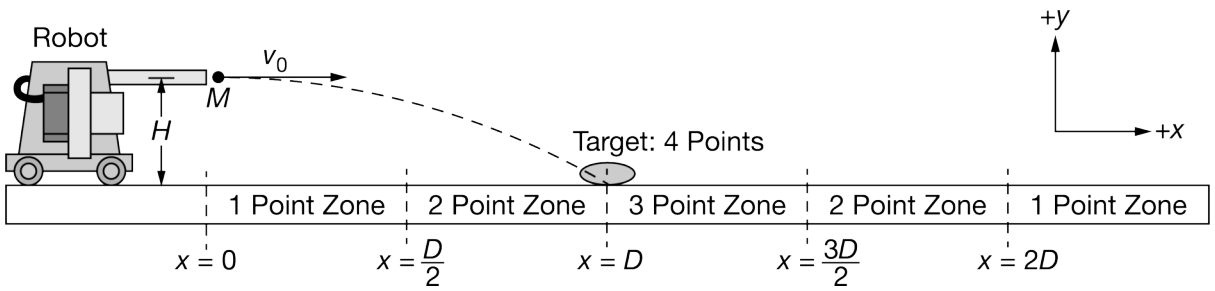

A group of students prepare for a robotic competition and build a robot that can launch large spheres of mass M in the horizontal direction with a variable speed and from a variable vertical position and a fixed horizontal position $x = 0$. The robot is calibrated by adjusting the speed at which the sphere is launched and the height of the robot's sphere launcher. Depending on where the spheres land on the ground, students earn points based on the accuracy of the robot. The robot is calibrated so that when the spheres are launched from a vertical position $y = H$ and speed v_0, they consistently land on the ground on a target that is at a position $x = D$. Positive directions for vector quantities are indicated in the figure.

(a) On the axes below, sketch the graphs of the horizontal and vertical components of the sphere's velocity v as a function of time t between $t = 0$, when the sphere is launched and $t = T$, when the sphere hits the target. Label $t = T$ for the horizontal component of the sphere's velocity and the vertical component of the sphere's velocity.

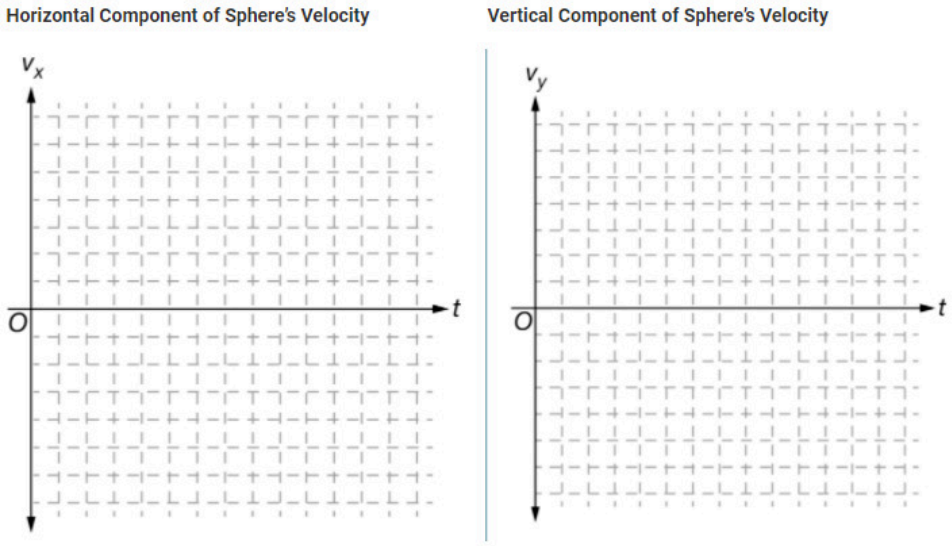

When the students arrive at the competition, it is determined that the height of the sphere launcher can no longer be adjusted due to a mechanical malfunction. Therefore, the spheres must be launched at a vertical position of $y = \frac{H}{2}$. However, the spheres may be launched at speed v_0 or $2v_0$.

(b) In a clear, coherent paragraph-length response that may also contain diagrams and/or equations, describe the speed at which a sphere should be launched so that the students earn the maximum number of points in the competition.

chapter1partc

18. This question is a short free-response question. Show your work for each part of the question. (10 points, suggested time 15 minutes)

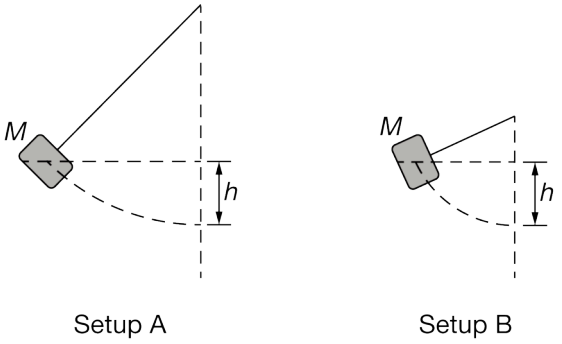

Note: Figures not drawn to scale.

Students construct two experimental setups A and B, as shown above. In each setup one end of a string of negligible mass is fixed in place and the other end is attached to a block of mass M. The string in setup A is longer than the string in setup B. The blocks are held so that the center of the blocks have the same vertical displacement h above the lowest point in the swing, as shown above. The blocks are then released from rest.

(a) Consider the instant in each block's motion when the string is vertical. Is the magnitude of the acceleration of the block at this instant greater for setup A, greater for setup B, or the same for both setups?

(b) In a clear, coherent, paragraph-length response, explain your reasoning for your response to part (a).

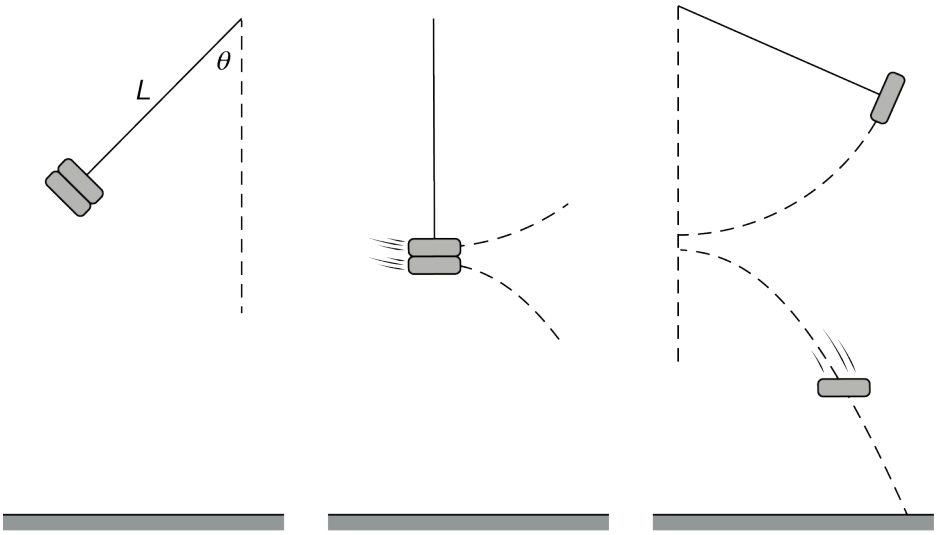

Note: Figures not drawn to scale.

Another experimental setup is created, this time with two blocks of equal mass that are taped together, as shown above at left. When the string is vertical, as shown above center, the tape fails and the bottom block separates from the top block and falls to the floor. The top block is still attached to the string and reaches the highest point of its

swing before the bottom block reaches the floor, as shown above at right.

(c) For the blocks-Earth system, in which of the following time intervals, if any, is the total mechanical energy of the system the same at the beginning and end of the interval? Be sure to indicate all time intervals that apply, or to write "none" if none of the time intervals apply. Briefly explain your reasoning.

- Interval A: Immediately after the blocks are released to immediately before the tape fails
- Interval B: Immediately before the tape fails to immediately after the tape fails
- Interval C: Immediately after the tape fails to the instant the top block reaches its maximum height

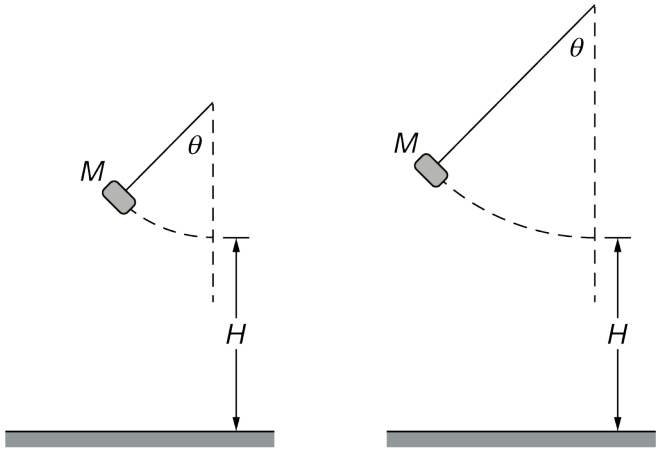

Note: Figures not drawn to scale.

Now two experimental setups are constructed that use strings of different lengths and identical blocks of mass M. The strings are at the same initial angle from the vertical when each block is released, as shown above. The setups are adjusted so that the blocks are at the same height H above the floor when the strings are vertical, as shown above.

This time, the string breaks when it is vertical, as shown below in the middle figure for one setup. Each block then falls to the floor, as shown at right below.

chapter1partc

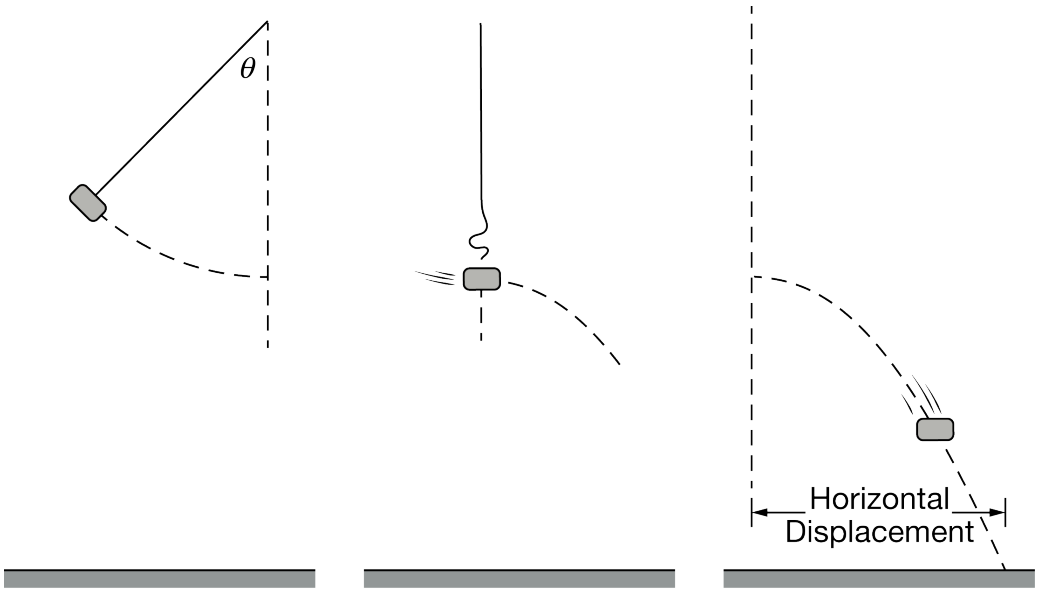

Note: Figures not drawn to scale.

(d) Is the horizontal displacement, from where the string breaks to where the block hits the floor, greater for the block with the shorter string, greater for the block with the longer string, or the same for both blocks? Briefly explain your reasoning.

chapter1partc

19. This question is a short free-response question. Show your work for each part of the question. (10 points, suggested time 15 minutes)

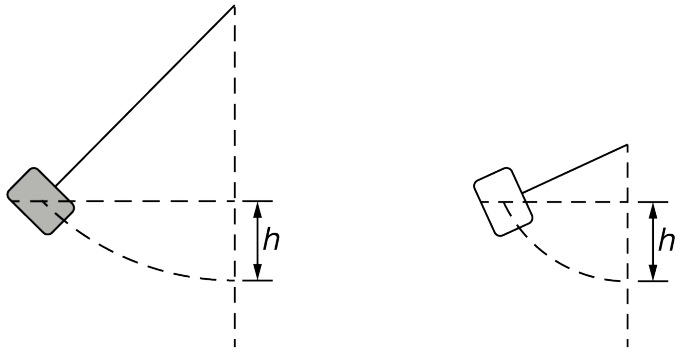

Setup A Setup B

Note: Figure not drawn to scale.

Students construct two experimental setups A and B, as shown above. In each setup one end of a string of negligible mass is fixed in place and the other end is attached to a block. The string in setup A is longer than the string in setup B and the blocks have different masses. The blocks are held so that the center of the blocks have the same vertical displacement h above the lowest point in the swing, as shown above. The blocks are then released from rest.

(a) Consider the instant in each block's motion when the string is vertical. Is the speed of the block at this instant in setup B greater than, less than, or equal to the speed of the block in setup A?

(b) The string tension is the same for both setups when the strings are instantaneously vertical with the blocks in motion. In a clear, coherent, paragraph-length response, do the following.

Explain your reasoning for your response to part (a).
Explain why the string tension could be the same for both pendulums when the strings are instantaneously vertical.

You do not need to show mathematically that the tensions are equal. You only need to provide reasoning for why they could be equal.

chapter1partc

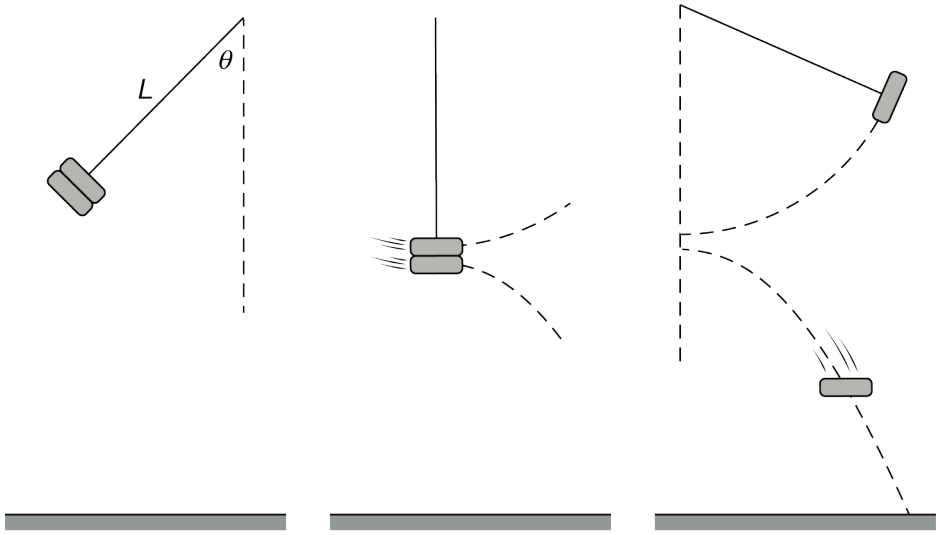

Note: Figures not drawn to scale.

Another experimental setup is created, this time with two blocks of equal mass that are taped together, as shown above at left. At the instant the string is vertical, as shown above, the tape fails and the bottom block separates from the top block and falls to the floor, as shown above center. The top block is still attached to the string and reaches the highest point of its swing before the bottom block reaches the floor, as shown above at right.

(c) The angular momentum of an object of mass m moving with speed v in a circle of radius r has a magnitude of mvr about the center of the circle. For the system consisting of the two blocks only, and not Earth, consider the angular momentum about the top end of the string, which is attached to the ceiling. Is the angular momentum constant from when the block is released to when the string is vertical? Briefly explain your reasoning.

(d) When the top block reaches the highest point of its swing for the first time after the tape fails, is it higher than, lower than, or at the same height as it was when the blocks were initially released? Briefly explain your reasoning.

chapter1partc

20. This question is a short free-response question. Show your work for each part of the question. (10 points, suggested time 15 minutes)

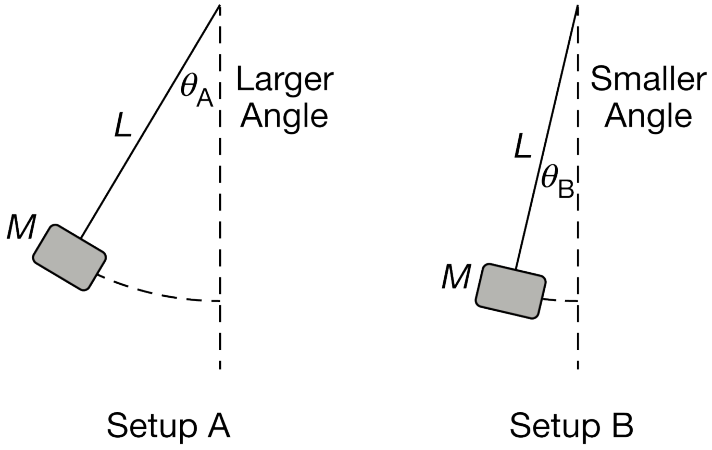

Note: Figures not drawn to scale.

Students construct two experimental setups A and B, as shown above. Each setup consists of a small block of known mass M attached to a string with negligible mass and length L. The tops of the strings are fixed in place. The blocks are held so that the strings make different angles θ_A (theta A) and θ_B (theta B) with the vertical, where $\theta_A > \theta_B$ as shown above. The blocks are then released from rest.

(a) When the blocks are in motion and the strings are instantaneously vertical, is the tension in the string in setup A greater than, less than, or equal to the tension in the string in setup B?

(b) In a clear, coherent, paragraph-length response, explain your reasoning for your response to part (a).

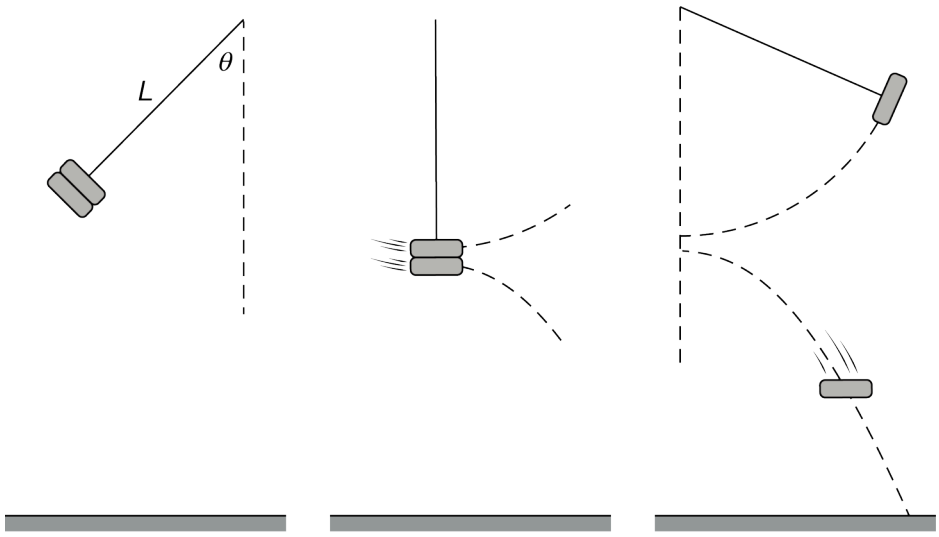

Note: Figures not drawn to scale.

chapter1partc

Another experimental setup is created, this time with two blocks of equal mass that are taped together, as shown above at left. At the instant the string is vertical, as shown above center, the tape fails and the bottom block separates from the top block and falls to the floor. The top block is still attached to the string and reaches the highest point of its swing before the bottom block reaches the floor, as shown above at right.

(c) For the system consisting of the two blocks only, and not Earth, is the total mechanical energy of the system the same immediately after the blocks are released as it is when the top block first reaches the highest point of its swing? Briefly explain your reasoning.

(d) When the top block reaches the highest point of its swing for the first time after the tape fails, is the angle made by the string with the vertical larger than, smaller than, or equal to the angle when the blocks were initially released? Note that the figures are not drawn to scale. Briefly explain your reasoning.

chapter1partc

21. This question is a short free-response question. Show your work for each part of the question. (10 points, suggested time 15 minutes)

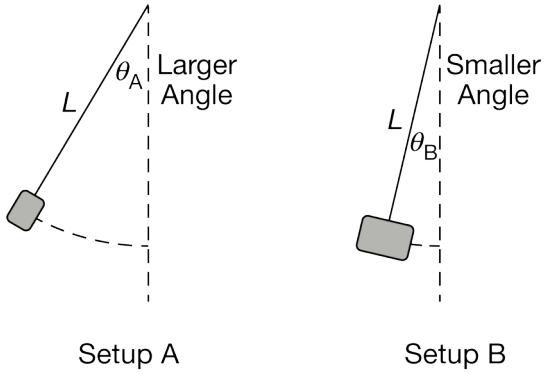

Note: Figures not drawn to scale.

Students construct two experimental setups A and B, as shown above. Each setup consists of a small block attached to a string with negligible mass and length L. The block in setup A is less massive than the block in setup B. The tops of the strings are fixed in place. The blocks are held so that the strings make different angles θ_A (theta A) and θ_B (theta B) with the vertical, where $\theta_A > \theta_B$. The blocks are then released from rest.

(a) Consider the instant in each block's motion when the string is vertical. Is the speed of the block at this instant greater for setup A, greater for setup B, or the same for both setups?

(b) The tension in the string is the same for both setups when the strings are vertical. In a clear, coherent, paragraph-length response, do the following.

Explain your reasoning for your response to part (a).
Explain why the string tension could be the same for both setups when the strings are vertical.

You do not need to show mathematically that the tensions are equal. You only need to provide reasoning for why they could be equal.

chapter1partc

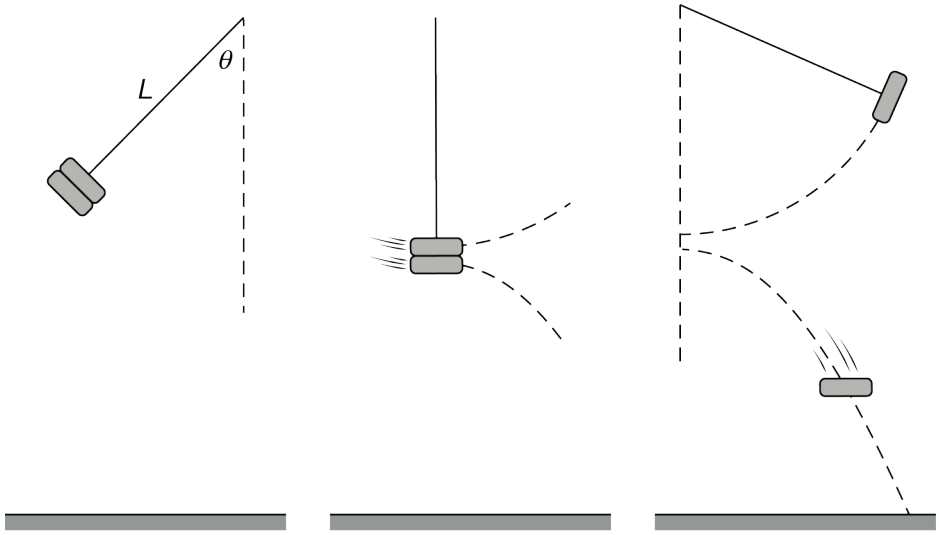

Note: Figures not drawn to scale.

Another experimental setup is created, this time with two blocks of equal mass that are taped together, as shown above at left. When the string is vertical, as shown above center, the tape fails and the bottom block separates from the top block and falls to the floor. The top block is still attached to the string and reaches the highest point of its swing before the bottom block reaches the floor, as shown above at right.

(c) Consider the time interval from immediately after the tape fails to the instant the top block reaches the highest point of its swing. Is there a system that includes one or more of the objects listed below for which the total mechanical energy of the system is constant during this interval? If so, write the object or objects in the system from the list below. If there is no such system using the objects listed below, indicate "no such system." Briefly explain your reasoning.

The top block
The bottom block
Earth

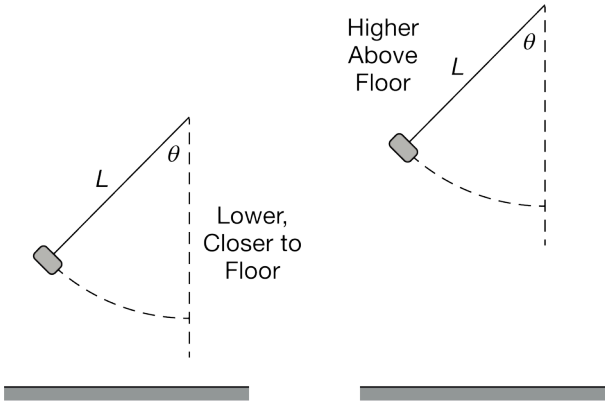

Note: Figures not drawn to scale.

Now two experimental setups are constructed that use strings of the same length L and identical blocks. The

strings are at the same initial angle from the vertical when each block is released, as shown above. However, one of the setups is positioned higher above the floor. This time, the string in each setup breaks when it is vertical, as shown below in the middle figure for one setup. Each block then falls to the floor, as shown at right below.

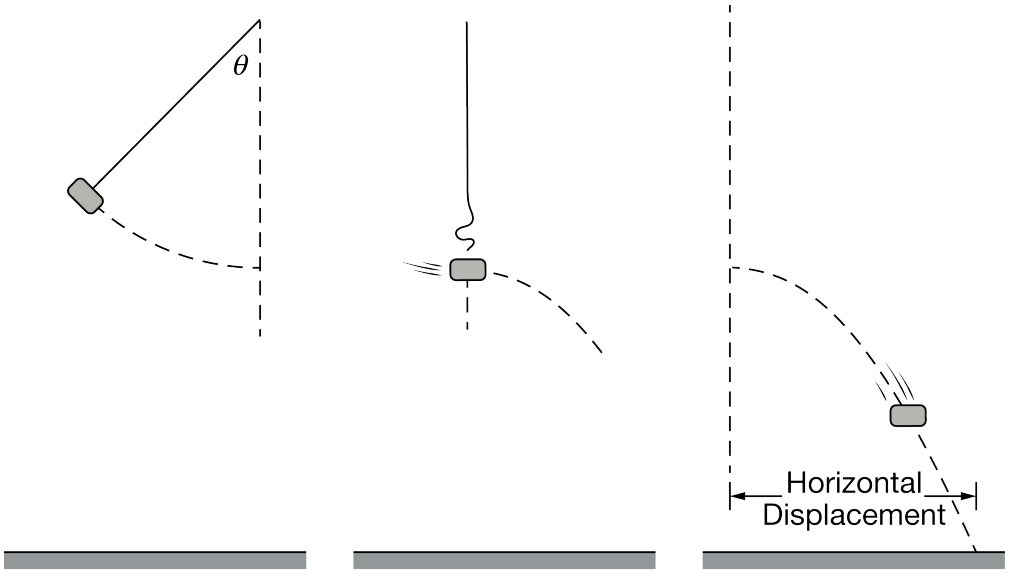

Note: Figures not drawn to scale.

(d) Is the horizontal displacement, from where the string breaks to where the block hits the floor, greater for the block that was closer to the floor, greater for the block that was higher above the floor, or the same for both blocks? Briefly explain your reasoning.

chapter1partc

22.

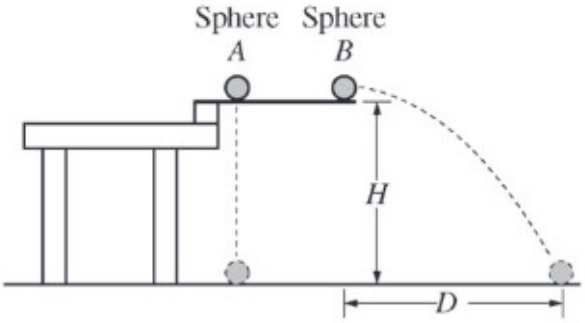

Two identical spheres are released from a device at time t = 0 from the same height H, as shown above. Sphere A has no initial velocity and falls straight down. Sphere B is given an initial horizontal velocity of magnitude v_0 and travels a horizontal distance D before it reaches the ground. The spheres reach the ground at the same time t_f, even though sphere B has more distance to cover before landing. Air resistance is negligible.

(a) The dots below represent spheres A and B. Draw a free-body diagram showing and labeling the forces (not components) exerted on each sphere at time $\frac{t_f}{2}$.

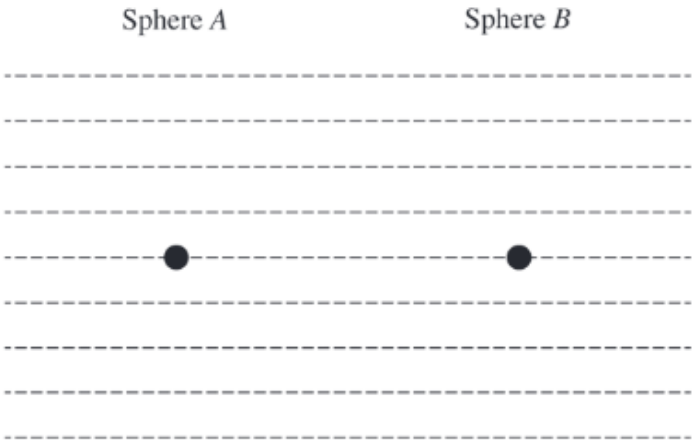

(b) On the axes below, sketch and label a graph of the horizontal component of the velocity of sphere A and of sphere B as a function of time.

chapter1partc

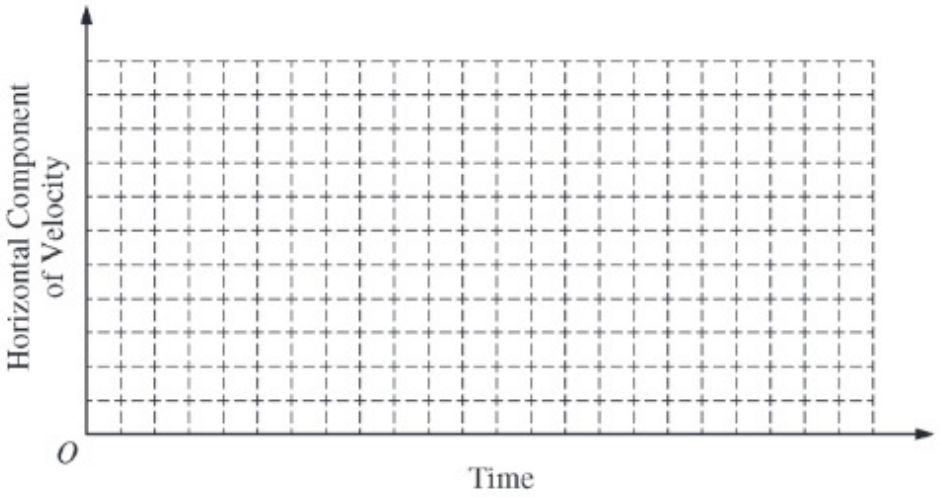

(c) In a clear, coherent, paragraph-length response, explain why the spheres reach the ground at the same time even though they travel different distances. Include references to your answers to parts (a) and (b).

chapter1partc

23. This question is a short free-response question. Show your work for each part of the question. (10 points, suggested time 15 minutes)

A class of physics students is investigating projectile motion using a variety of equipment. Assume air resistance can be ignored in all cases.

One group constructs a long ramp as shown in Ramp 1 below. In their experiment, they release a disk from the left side of the ramp and allow the disk to launch off the right side. The ramp is smooth enough that friction can be ignored. The left side of the ramp is supported by the top of a shelf, and the other side is supported by the top of a desk. The left and right sides of the ramp are at angles θ_{L} and θ_{R1} with the horizontal respectively.

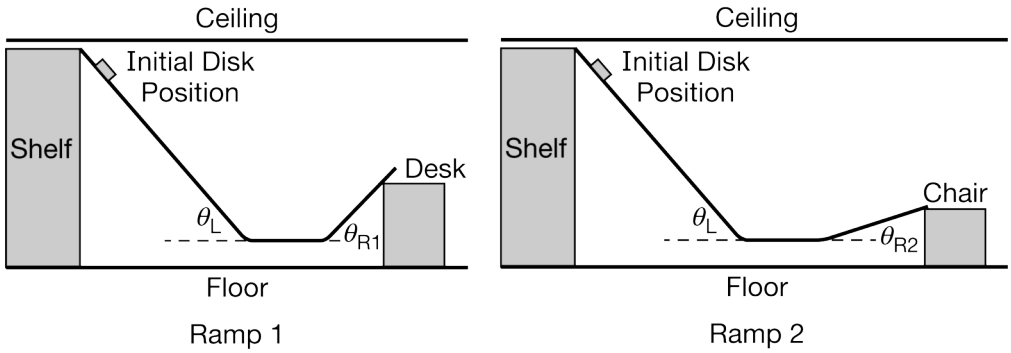

Note: Figures not drawn to scale.

The students release a disk and measure the maximum height it reaches after leaving the right side of the ramp. The students then adjust the ramp so that $\theta_{\mathrm{R2}} < \theta_{\mathrm{R1}}$ and the height of the right side of the ramp is lower as shown in the Ramp 2 configuration above. Assume the length of the right section of the ramp is the same in both cases.

(a) Will the disk launched from Ramp 2 reach a maximum height that is greater than, less than, or equal to the maximum height reached by the disk launched from Ramp 1? Justify your answer.

chapter1partc

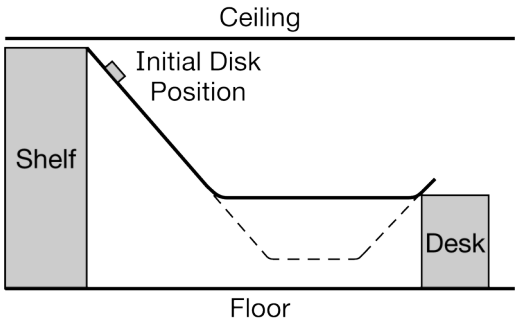

Ramp 3

Note: Figure not drawn to scale.

Finally, the students adjust the ramp into the configuration labeled Ramp 3 above in which the horizontal section of the ramp is at a greater height than in Ramp 1, which is represented by the dotted line. The students release the disk on Ramp 3.

(b) On which ramp, Ramp 1 or Ramp 3, if either, does the disk spend more time on the horizontal section of the ramp before launching off the right side? Explain your answer.

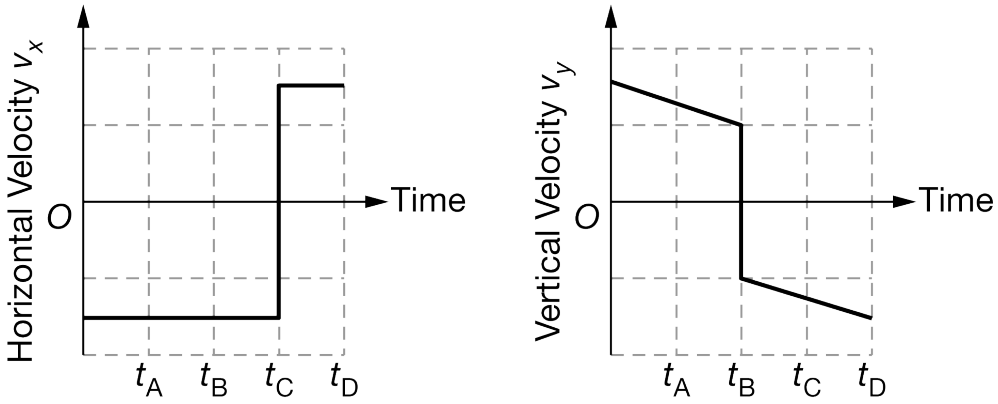

One group uses a device that can launch a steel ball. The group launches the ball and it bounces off the ceiling, floor, and wall several times though not necessarily in that order. Each collision can be modeled as elastic, and friction between the ball and the surfaces is negligible. The graphs above show the horizontal and vertical components of the velocity of the ball during some time interval in the ball's motion. The positive direction is taken to be upward.

(c) During the time interval shown in the graphs, the ball has two collisions. In a clear, coherent, paragraph-length response, identify the times when these collisions occur using the times indicated on the graph, and explain how you know whether each collision is with the wall, the ceiling, or the floor.

chapter1partc

24. This question is a short free-response question. Show your work for each part of the question. (10 points, suggested time 15 minutes)

A class of physics students is investigating projectile motion using a variety of equipment. Assume air resistance can be ignored in all cases.

One group constructs a long ramp as shown in Ramp 1 below. In their experiment, they release a disk from the left side of the ramp and allow the disk to launch off the right side. The ramp is smooth enough that friction can be ignored. The left side of the ramp is supported by the top of a shelf, and the other side is supported by the top of a desk. The left and right sides of the ramp are at angles θ_{L1} and θ_{R} with the horizontal respectively.

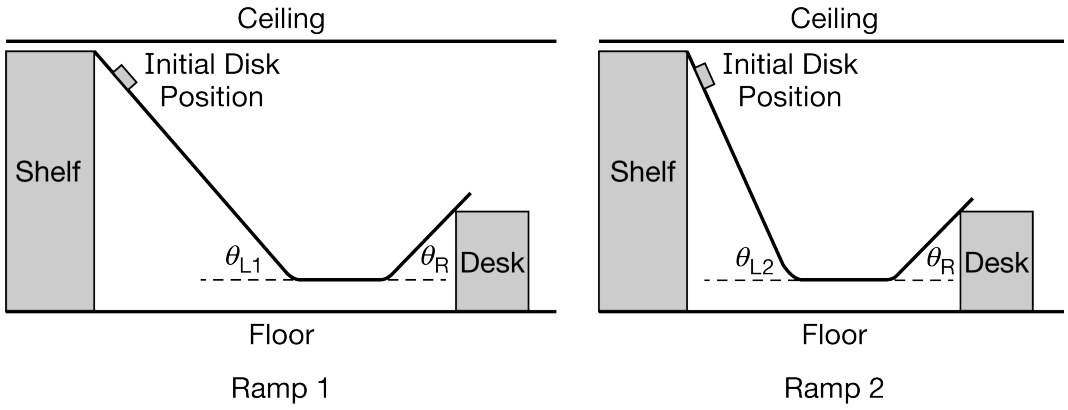

Note: Figures not drawn to scale.

The students release a disk from Ramp 1 and measure the maximum height it reaches after leaving the right side of the ramp. The students then increase the angle of the left ramp so that $\theta_{\mathrm{L1}} < \theta_{\mathrm{L2}}$, and they keep the top of the ramp against the shelf as shown in the Ramp 2 configuration above so that the disk is released at the same height.

(a) Will the disk launched from Ramp 2 reach a maximum height that is greater than, less than, or equal to the maximum height reached by the disk launched from Ramp 1? Justify your answer.

chapter1partc

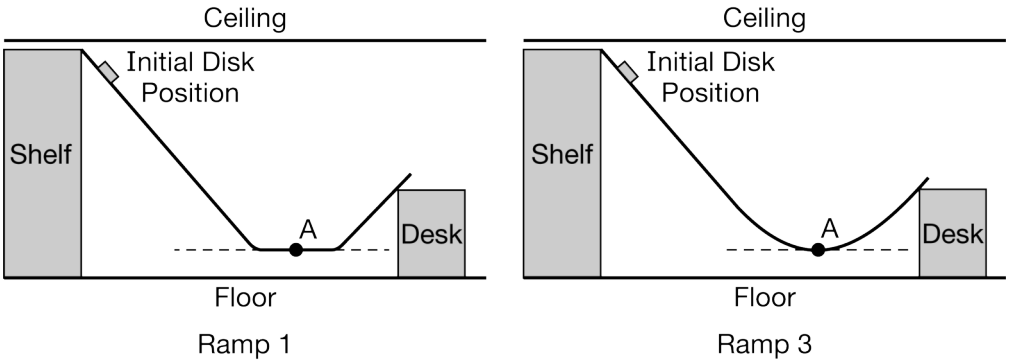

Note: Figures not drawn to scale.

Next, the students adjust the ramp into the configuration labeled Ramp 3 in which the lowest part of the ramp has been shaped into a circular curve. The lowest point of Ramp 3 is at the same height as the lowest section of Ramp 1. Both ramps are shown above.

(b) On which ramp, Ramp 1 or Ramp 3, is the force exerted by the ramp on the disk at point A greater? Explain your answer.

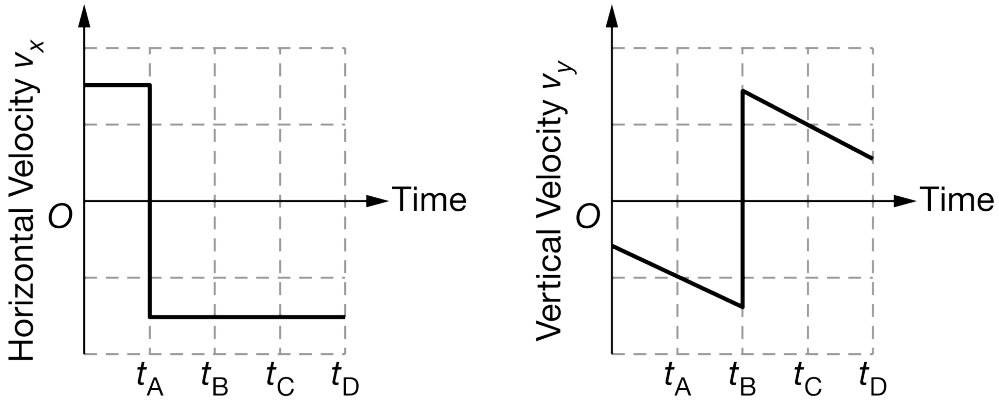

Another group uses a device that can launch a steel ball. The group launches the ball and it bounces off the ceiling, floor, and wall several times though not necessarily in that order. Each collision can be modeled as elastic, and friction between the ball and the surfaces is negligible. The graphs above show the horizontal and vertical components of the velocity of the ball during some time interval in the ball's motion. The positive direction is taken to be upward.

(c) During the time interval shown in the graphs, the ball has two collisions. In a clear, coherent, paragraph-length response, identify the times when each of these collisions occur using the times indicated on the graph, and explain how you know whether each collision is with the wall, the ceiling, or the floor.

chapter1partc

25. This question is a short free-response question. Show your work for each part of the question. (10 points, suggested time 15 minutes)

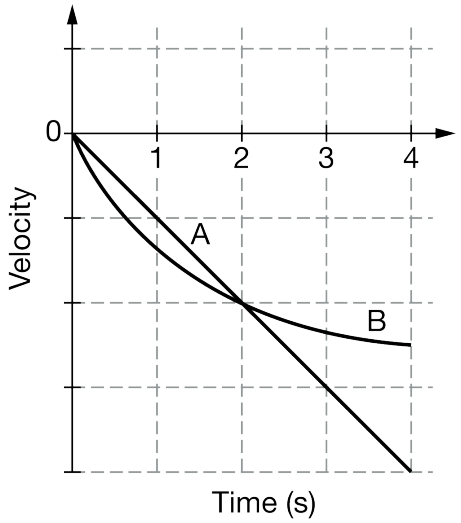

Two identical objects, A and B, move along straight, parallel, horizontal tracks. The graph above represents the velocity as a function of time for the two objects.

(a) Indicate which of the two objects, if either, has a decreasing speed during the time interval shown. If neither object has a decreasing speed, indicate this explicitly. Briefly explain your answer.

(b) Indicate at approximately which time or times, if any, the objects are moving at the same speed. If the objects are never moving with the same speed during the interval shown, indicate this explicitly. Briefly explain your answer.

(c) For which object, if either, is the magnitude of the net work done on it greater for the time interval shown? If the net work has the same magnitude for both objects, indicate this explicitly.

(d) In a clear, coherent paragraph-length response, explain your response to part (c).