AP Physics B
2001 Free-Response Questions

The materials included in these files are intended for use by AP teachers for course and exam preparation in the classroom; permission for any other use must be sought from the Advanced Placement Program. Teachers may reproduce them, in whole or in part, in limited quantities, for face-to-face teaching purposes but may not mass distribute the materials, electronically or otherwise. These materials and any copies made of them may not be resold, and the copyright notices must be retained as they appear here. This permission does not apply to any third-party copyrights contained herein.

These materials were produced by Educational Testing Service (ETS), which develops and administers the examinations of the Advanced Placement Program for the College Board. The College Board and Educational Testing Service (ETS) are dedicated to the principle of equal opportunity, and their programs, services, and employment policies are guided by that principle.

The College Board is a national nonprofit membership association dedicated to preparing, inspiring, and connecting students to college and opportunity. Founded in 1900, the association is composed of more than 3,900 schools, colleges, universities, and other educational organizations. Each year, the College Board serves over three million students and their parents, 22,000 high schools, and 3,500 colleges, through major programs and services in college admission, guidance, assessment, financial aid, enrollment, and teaching and learning. Among its best-known programs are the SAT®, the PSAT/NMSQT™, the Advanced Placement Program® (AP®), and Pacesetter®. The College Board is committed to the principles of equity and excellence, and that commitment is embodied in all of its programs, services, activities, and concerns.

Copyright © 2001 by College Entrance Examination Board. All rights reserved. College Board, Advanced Placement Program, AP, and the acorn logo are registered trademarks of the College Entrance Examination Board.

AP® PHYSICS B EQUATIONS FOR 2001

NEWTONIAN MECHANICS

$v = v_0 + at$

$x = x_0 + v_0 t + \frac{1}{2} at^2$

$v^2 = {v_0}^2 + 2a(x - x_0)$

$\sum \mathbf{F} = \mathbf{F}_{net} = m\mathbf{a}$

$F_{fric} \leq \mu N$

$a_c = \frac{v^2}{r}$

$\tau = rF \sin \theta$

$\mathbf{p} = m\mathbf{v}$

$\mathbf{J} = \mathbf{F}\Delta t = \Delta\mathbf{p}$

$K = \frac{1}{2} mv^2$

$\Delta U_g = mgh$

$W = \mathbf{F} \cdot \mathbf{s} = Fs \cos \theta$

$P_{avg} = \frac{W}{\Delta t}$

$P = Fv$

$\mathbf{F}_s = -k\mathbf{x}$

$U_s = \frac{1}{2} kx^2$

$T_s = 2\pi\sqrt{\frac{m}{k}}$

$T_p = 2\pi\sqrt{\frac{\ell}{g}}$

$T = \frac{1}{f}$

$F_G = -\frac{Gm_1 m_2}{r^2}$

$U_G = -\frac{Gm_1 m_2}{r}$

a = acceleration
F = force
f = frequency
h = height
J = impulse
K = kinetic energy
k = spring constant
ℓ = length
m = mass
N = normal force
P = power
p = momentum
r = radius or distance
s = displacement
T = period
t = time
U = potential energy
v = velocity or speed
W = work
x = position
μ = coefficient of friction
θ = angle
τ = torque

ELECTRICITY AND MAGNETISM

$F = \frac{1}{4\pi\epsilon_0} \frac{q_1 q_2}{r^2}$

$\mathbf{E} = \frac{\mathbf{F}}{q}$

$U_E = qV = \frac{1}{4\pi\epsilon_0} \frac{q_1 q_2}{r}$

$E_{avg} = -\frac{V}{d}$

$V = \frac{1}{4\pi\epsilon_0} \sum_i \frac{q_i}{r_i}$

$C = \frac{Q}{V}$

$C = \frac{\epsilon_0 A}{d}$

$U_c = \frac{1}{2} QV = \frac{1}{2} CV^2$

$I_{avg} = \frac{\Delta Q}{\Delta t}$

$R = \frac{\rho\ell}{A}$

$V = IR$

$P = IV$

$C_p = \sum_i C_i$

$\frac{1}{C_s} = \sum_i \frac{1}{C_i}$

$R_s = \sum_i R_i$

$\frac{1}{R_p} = \sum_i \frac{1}{R_i}$

$F_B = qvB \sin \theta$

$F_B = BI\ell \sin \theta$

$B = \frac{\mu_0}{2\pi} \frac{I}{r}$

$\phi_m = \mathbf{B} \cdot \mathbf{A} = BA \cos \theta$

$\mathcal{E}_{avg} = -\frac{\Delta\phi_m}{\Delta t}$

$\mathcal{E} = B\ell v$

A = area
B = magnetic field
C = capacitance
d = distance
E = electric field
$\mathcal{E}$ = emf
F = force
I = current
ℓ = length
P = power
Q = charge
q = point charge
R = resistance
r = distance
t = time
U = potential (stored) energy
V = electric potential or potential difference
v = velocity or speed
ρ = resistivity
ϕ_m = magnetic flux

AP® PHYSICS B EQUATIONS FOR 2001

THERMAL PHYSICS

$\Delta \ell = \alpha \ell_0 \Delta T$

$Q = mL$

$Q = mc\Delta T$

$p = \frac{F}{A}$

$pV = nRT$

$K_{avg} = \frac{3}{2} k_B T$

$v_{rms} = \sqrt{\frac{3RT}{M}} = \sqrt{\frac{3k_B T}{\mu}}$

$W = p\Delta V$

$Q = nc\Delta T$

$\Delta U = Q - W$

$\Delta U = nc_V \Delta T$

$e = \frac{W}{Q_H} = \frac{Q_H - Q_C}{Q_H}$

$e_c = \frac{T_H - T_C}{T_H}$

A = area
c = specific heat or molar specific heat
e = efficiency
K_{avg} = average molecular kinetic energy
L = heat of transformation
ℓ = length
M = molecular mass
m = mass of sample
n = number of moles
p = pressure
Q = heat transferred
T = temperature
U = internal energy
V = volume
v_{rms} = root-mean-square velocity
W = work done by system
α = coefficient of linear expansion
μ = mass of molecule

WAVES AND OPTICS

$v = f\lambda$

$n = \frac{c}{v}$

$n_1 \sin \theta_1 = n_2 \sin \theta_2$

$\sin \theta_c = \frac{n_2}{n_1}$

$\frac{1}{s_i} + \frac{1}{s_0} = \frac{1}{f}$

$M = \frac{h_i}{h_0} = -\frac{s_i}{s_0}$

$f = \frac{R}{2}$

$d \sin \theta = m\lambda$

$x_m \approx \frac{m\lambda L}{d}$

d = separation
f = frequency or focal length
h = height
L = distance
M = magnification
m = an integer
n = index of refraction
R = radius of curvature
s = distance
v = speed
x = position
λ = wavelength
θ = angle

ATOMIC AND NUCLEAR PHYSICS

$E = hf = pc$

$K_{\max} = hf - \phi$

$\lambda = \frac{h}{p}$

$\Delta E = (\Delta m)c^2$

E = energy
f = frequency
K = kinetic energy
m = mass
p = momentum
λ = wavelength
ϕ = work function

GEOMETRY AND TRIGONOMETRY

Rectangle
$A = bh$
Triangle
$A = \frac{1}{2} bh$
Circle
$A = \pi r^2$
$C = 2\pi r$
Parallelepiped
$V = \ell wh$
Cylinder
$V = \pi r^2 \ell$
$S = 2\pi r\ell + 2\pi r^2$
Sphere
$V = \frac{4}{3} \pi r^3$
$S = 4\pi r^2$
Right Triangle
$a^2 + b^2 = c^2$
$\sin \theta = \frac{a}{c}$
$\cos \theta = \frac{b}{c}$
$\tan \theta = \frac{a}{b}$

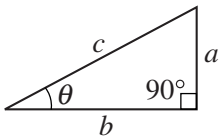

A = area
C = circumference
V = volume
S = surface area
b = base
h = height
ℓ = length
w = width
r = radius

PHYSICS B

SECTION II

Time—90 minutes

7 Questions

Directions: Answer all seven questions, which are weighted according to the points indicated. The suggested time is about 15 minutes for answering each of questions 1-4, and about 10 minutes for answering each of questions 5-7. The parts within a question may not have equal weight. Show all your work in the pink booklet in the spaces provided after each part, NOT in this green insert.

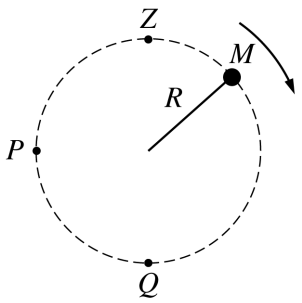

Side View

1. (15 points)

A ball of mass M is attached to a string of length R and negligible mass. The ball moves clockwise in a vertical circle, as shown above. When the ball is at point P, the string is horizontal. Point Q is at the bottom of the circle and point Z is at the top of the circle. Air resistance is negligible. Express all algebraic answers in terms of the given quantities and fundamental constants.

(a) On the figures below, draw and label all the forces exerted on the ball when it is at points P and Q, respectively.

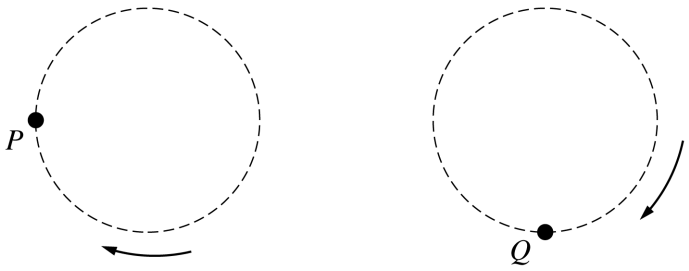

(b) Derive an expression for v_{min}, the minimum speed the ball can have at point Z without leaving the circular path.

(c) The maximum tension the string can have without breaking is T_{max}. Derive an expression for v_{max}, the maximum speed the ball can have at point Q without breaking the string.

(d) Suppose that the string breaks at the instant the ball is at point P. Describe the motion of the ball immediately after the string breaks.

Copyright © 2001 by College Entrance Examination Board. All rights reserved.
Advanced Placement Program and AP are registered trademarks of the College Entrance Examination Board.

GO ON TO THE NEXT PAGE.

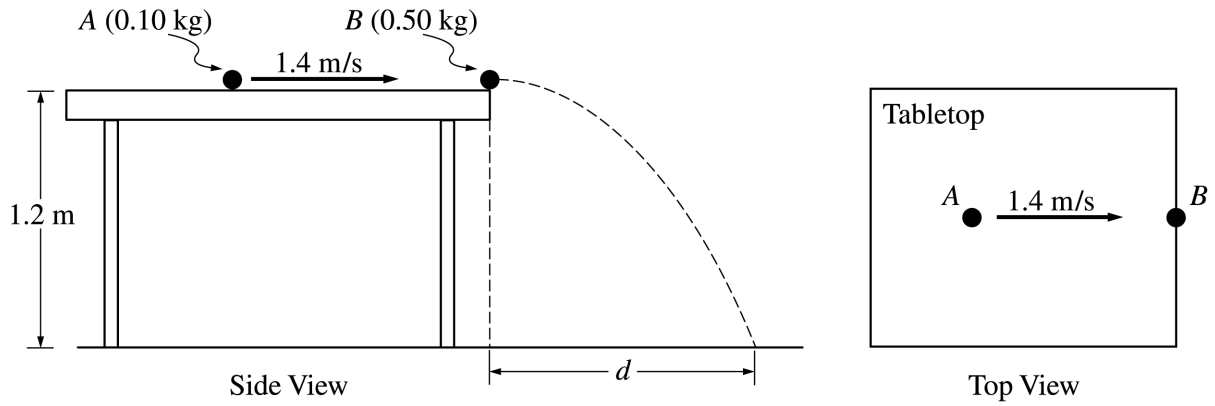

Note: Figures not drawn to scale.

2. (15 points)

An incident ball A of mass 0.10 kg is sliding at 1.4 m/s on the horizontal tabletop of negligible friction shown above. It makes a head-on collision with a target ball B of mass 0.50 kg at rest at the edge of the table. As a result of the collision, the incident ball rebounds, sliding backwards at 0.70 m/s immediately after the collision.

(a) Calculate the speed of the 0.50 kg target ball immediately after the collision.

The tabletop is 1.20 m above a level, horizontal floor. The target ball is projected horizontally and initially strikes the floor at a horizontal displacement d from the point of collision.

(b) Calculate the horizontal displacement d.

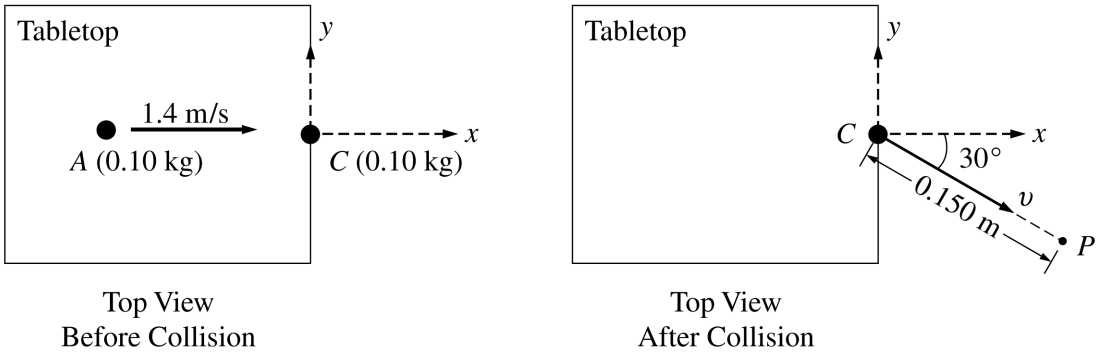

In another experiment on the same table, the target ball B is replaced by target ball C of mass 0.10 kg. The incident ball A again slides at 1.4 m/s, as shown above left, but this time makes a glancing collision with the target ball C that is at rest at the edge of the table. The target ball C strikes the floor at point P, which is at a horizontal displacement of 0.15 m from the point of the collision, and at a horizontal angle of 30° from the $+x$-axis, as shown above right.

(c) Calculate the speed v of the target ball C immediately after the collision.

(d) Calculate the y-component of incident ball A's momentum immediately after the collision.

Copyright © 2001 by College Entrance Examination Board. All rights reserved.
Advanced Placement Program and AP are registered trademarks of the College Entrance Examination Board.

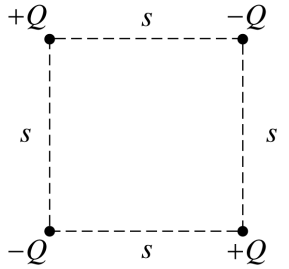

Arrangement 1

3. (15 points)

Four charged particles are held fixed at the corners of a square of side s. All the charges have the same magnitude Q, but two are positive and two are negative. In Arrangement 1, shown above, charges of the same sign are at opposite corners. Express your answers to parts (a) and (b) in terms of the given quantities and fundamental constants.

(a) For Arrangement 1, determine the following.

i. The electrostatic potential at the center of the square

ii. The magnitude of the electric field at the center of the square

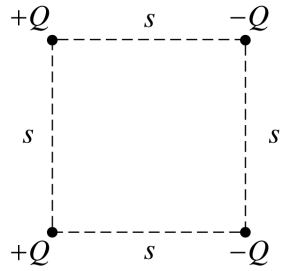

Arrangement 2

The bottom two charged particles are now switched to form Arrangement 2, shown above, in which the positively charged particles are on the left and the negatively charged particles are on the right.

(b) For Arrangement 2, determine the following.

i. The electrostatic potential at the center of the square

ii. The magnitude of the electric field at the center of the square

(c) In which of the two arrangements would more work be required to remove the particle at the upper right corner from its present position to a distance a long way away from the arrangement?

___ Arrangement 1 ___ Arrangement 2

Justify your answer.

Copyright © 2001 by College Entrance Examination Board. All rights reserved.
Advanced Placement Program and AP are registered trademarks of the College Entrance Examination Board.

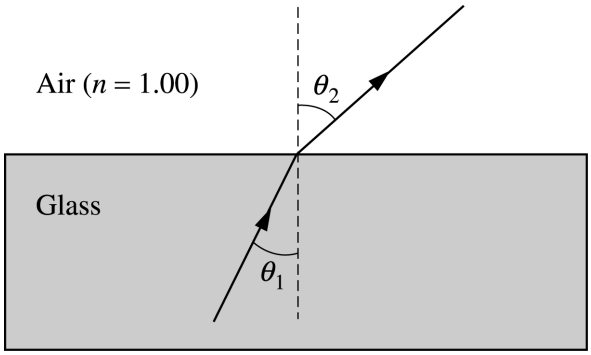

4. (15 points)

In an experiment a beam of red light of wavelength 675 nm in air passes from glass into air, as shown above. The incident and refracted angles are θ_1 and θ_2, respectively. In the experiment, angle θ_2 is measured for various angles of incidence θ_1, and the sines of the angles are used to obtain the line shown in the following graph.

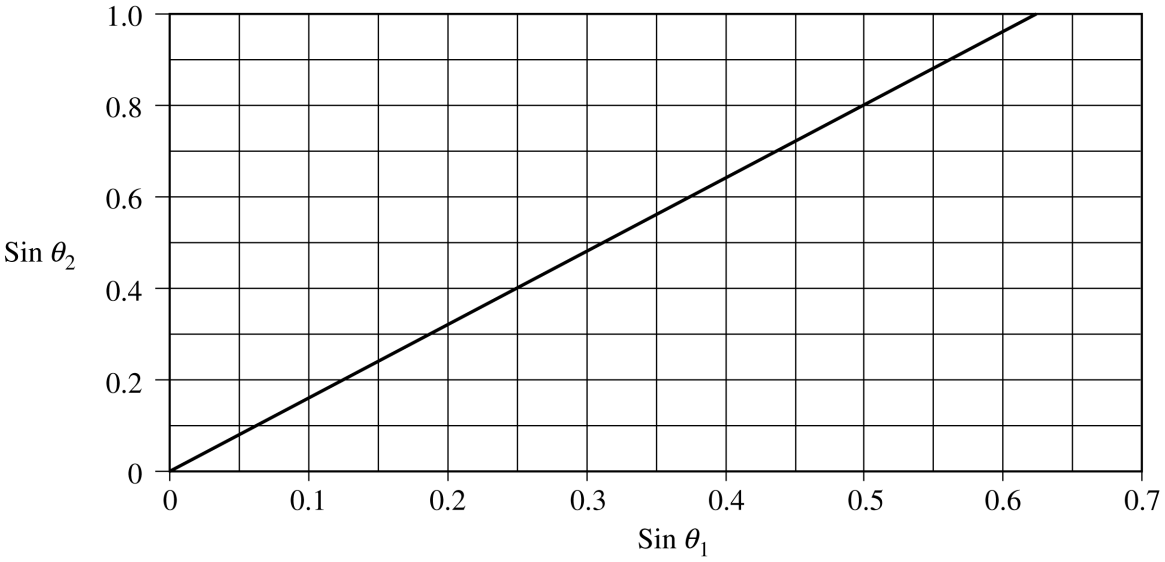

(a) Assuming an index of refraction of 1.00 for air, use the graph to determine a value for the index of refraction of the glass for the red light. Explain how you obtained this value.

Copyright © 2001 by College Entrance Examination Board. All rights reserved.
Advanced Placement Program and AP are registered trademarks of the College Entrance Examination Board.

(b) For this red light, determine the following.

i. The frequency in air

ii. The speed in glass

iii. The wavelength in glass

(c) The index of refraction of this glass is 1.66 for violet light, which has wavelength 425 nm in air.

i. Given the same incident angle θ_1, show on the ray diagram on the previous page how the refracted ray for the violet light would vary from the refracted ray already drawn for the red light.

ii. Sketch the graph of sin θ_2 *versus* sin θ_1 for the violet light on the figure on the previous page that shows the same graph already drawn for the red light.

(d) Determine the critical angle of incidence θ_c for the violet light in the glass in order for total internal reflection to occur.

Copyright © 2001 by College Entrance Examination Board. All rights reserved.
Advanced Placement Program and AP are registered trademarks of the College Entrance Examination Board.

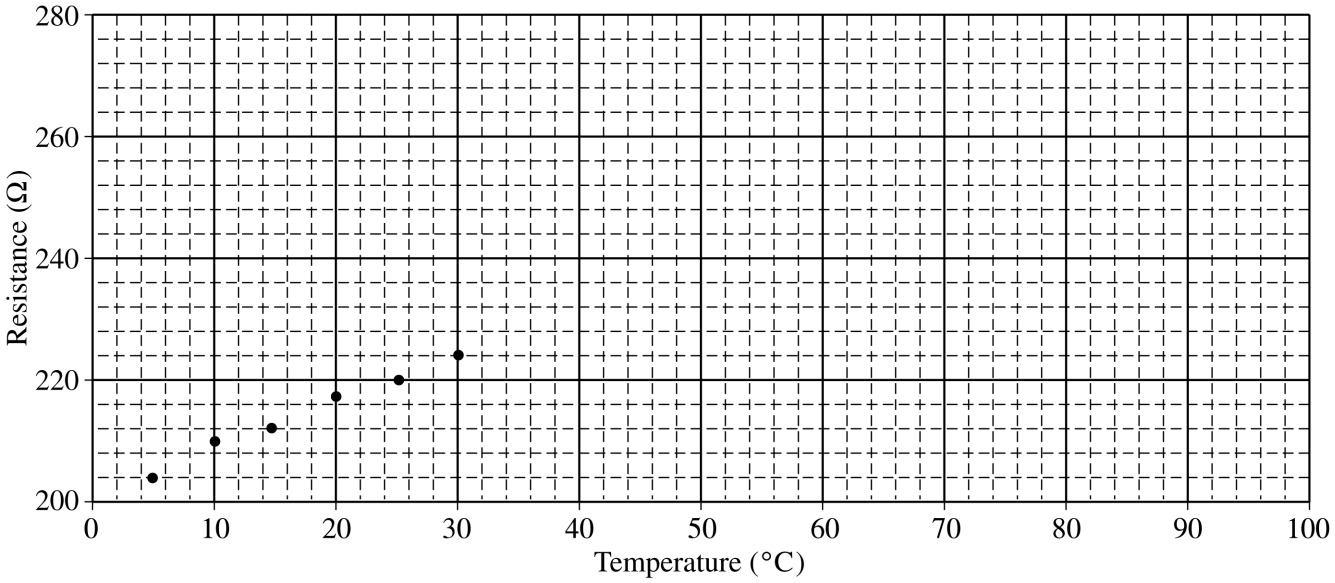

5. (10 points)

A platinum resistor has a resistance that changes with temperature. Values of the resistance were obtained experimentally for several temperatures from 5°C to 30°C only and plotted on the graph above. Design a procedure in which this resistor can be used as a thermometer to measure the temperature of a liquid that is in the 50°C to 75°C range. The resistor can be safely immersed in liquids. Along with the resistor and the container of the liquid of unknown temperature, the following equipment and materials may be used.

Power supply
Ammeter (Note: The ammeter and the voltmeter cannot
Voltmeter be used directly as an ohmmeter.)
Connecting wires
Ice-water bath
Boiling-water bath

(a) Sketch a diagram (with labels) to show how equipment is to be connected to make the necessary measurements, and briefly outline the steps to be followed.

(b) Discuss what measurements will be taken to determine the temperature of the unknown liquid.

(c) Discuss one assumption that must be made regarding equipment or procedure in order to use the method you have described.

Copyright © 2001 by College Entrance Examination Board. All rights reserved.
Advanced Placement Program and AP are registered trademarks of the College Entrance Examination Board.

GO ON TO THE NEXT PAGE.

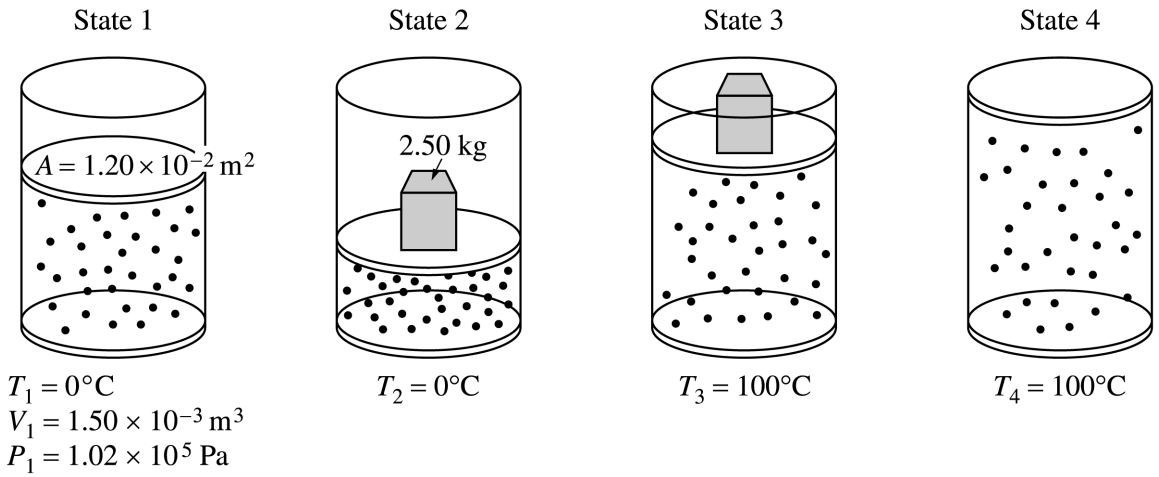

Note: Figures not drawn to scale.

6. (10 points)

A cylinder is fitted with a freely moveable piston of area $1.20 \times 10^{-2}\ \text{m}^2$ and negligible mass. The cylinder below the piston is filled with a gas. At state 1, the gas has volume $1.50 \times 10^{-3}\ \text{m}^3$, pressure $1.02 \times 10^5\ \text{Pa}$, and the cylinder is in contact with a water bath at a temperature of 0°C. The gas is then taken through the following four-step process.

- A 2.50 kg metal block is placed on top of the piston, compressing the gas to state 2, with the gas still at 0°C.
- The cylinder is then brought in contact with a boiling water bath, raising the gas temperature to 100°C at state 3.
- The metal block is removed and the gas expands to state 4 still at 100°C.
- Finally, the cylinder is again placed in contact with the water bath at 0°C, returning the system to state 1.

(a) Determine the pressure of the gas in state 2.

(b) Determine the volume of the gas in state 2.

(c) Indicate below whether the process from state 2 to state 3 is isothermal, isobaric, or adiabatic.

___ Isothermal ___ Isobaric ___ Adiabatic

Explain your reasoning.

(d) Is the process from state 4 to state 1 isobaric? ____ Yes ____ No

Explain your reasoning.

(e) Determine the volume of the gas in state 4.

Copyright © 2001 by College Entrance Examination Board. All rights reserved.
Advanced Placement Program and AP are registered trademarks of the College Entrance Examination Board.

7. (10 points)

Consider the following nuclear fusion reaction that uses deuterium as fuel.

$$3\left({}^{2}_{1}\mathrm{H}\right) \rightarrow {}^{4}_{2}\mathrm{He} + {}^{1}_{1}\mathrm{H} + {}^{1}_{0}\mathrm{n}$$

(a) Determine the mass defect of a single reaction, given the following information.

$${}^{2}_{1}\mathrm{H} = 2.0141\ \mathrm{u} \qquad {}^{4}_{2}\mathrm{He} = 4.0026\ \mathrm{u} \qquad {}^{1}_{1}\mathrm{H} = 1.0078\ \mathrm{u} \qquad {}^{1}_{0}\mathrm{n} = 1.0087\ \mathrm{u}$$

(b) Determine the energy in joules released during a single fusion reaction.

(c) The United States requires about $10^{20}\ \mathrm{J}$ per year to meet its energy needs. How many deuterium atoms would be necessary to provide this magnitude of energy?

(d) Assume that 0.015% of the hydrogen atoms in seawater $(\mathrm{H_2O})$ are deuterium. The atomic mass number of oxygen is 16. About how many kilograms of seawater would be needed per year to provide the hydrogen fuel for fusion reactors to meet the energy needs of the United States?

END OF EXAMINATION

Copyright © 2001 by College Entrance Examination Board. All rights reserved.
Advanced Placement Program and AP are registered trademarks of the College Entrance Examination Board.