2022

AP CollegeBoard

AP® Physics C: Mechanics

Sample Student Responses and Scoring Commentary Set 1

Inside:

Free-Response Question 1

- ☑ **Scoring Guidelines**
- ☑ **Student Samples**
- ☑ **Scoring Commentary**

© 2022 College Board. College Board, Advanced Placement, AP, AP Central, and the acorn logo are registered trademarks of College Board. Visit College Board on the web: collegeboard.org.

AP Central is the official online home for the AP Program: apcentral.collegeboard.org.

Question 1: Free-Response Question — 15 points

(a) For correctly drawing and labeling the force of gravity and the normal force on the block of mass m — **1 point**

For correctly drawing and labeling the force of friction on the block of mass m — **1 point**

For correctly drawing and labeling the force of tension on the block of mass m — **1 point**

Example Response

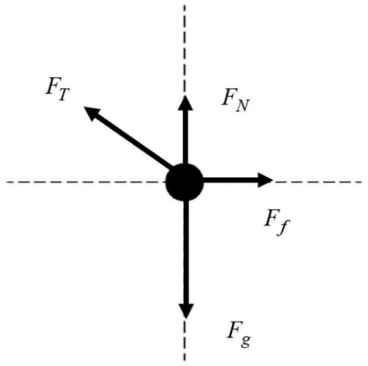

Scoring Notes:

- Examples of appropriate labels for the force due to gravity include: F_G, F_g, F_{grav}, W, mg, Mg, "grav force," "F Earth on block," "F on block by Earth" $F_{\text{Earth on block}}$, $F_{E,Block}$. The labels G and g are not appropriate labels for the force due to gravity. F_n, F_N, N, "normal force," "ground force," or similar labels may be used for the normal force. F_{string}, F_s, F_T, $F_{Tension}$, T, "string force," "tension force," or similar labels may be used for the tension force exerted by the string.
- A response with extraneous forces or vectors can earn a maximum of two points.

Total for part (a) — 3 points

(b) For a trigonometric expression relating the angle to the horizontal distance of the block from the left corner of the table, x. — **1 point**

For any correct trigonometric expression for θ in terms of the given quantities — **1 point**

Example Responses

First Point	Second Point
$\sin\theta = \dfrac{H}{\sqrt{H^2 + x^2}}$	$\theta = \sin^{-1}\left(\dfrac{H}{\sqrt{H^2 + x^2}}\right)$
$\cos\theta = \dfrac{x}{\sqrt{H^2 + x^2}}$	$\theta = \cos^{-1}\left(\dfrac{x}{\sqrt{H^2 + x^2}}\right)$
$\tan\theta = \dfrac{H}{x}$	$\theta = \tan^{-1}\left(\dfrac{H}{x}\right)$

Total for part (b) — 2 points

© 2022 College Board

(c)(i) For using Newton's second law to sum the forces in the vertical direction and write an equation that is consistent with part (a) **1 point**

$\Sigma F_y = ma$

$F_{net,y} = F_N + F_{T,y} - F_g = 0$

$F_N = F_g - F_{T,y}$

For correctly substituting the vertical component of the tension in terms of the given variables consistent with part (b) **1 point**

$F_N = mg - F_T \sin\theta$

$F_N = mg - F_T\left(\frac{H}{\sqrt{H^2 + x^2}}\right)$

(c)(ii) For using Newton's second law to sum the forces in the horizontal direction and write an equation that is consistent with part (a) **1 point**

$F_{net,x} = F_{T,x} - F_f$

For correctly substituting the horizontal component of the force of tension in terms of the given variables consistent with part (b) **1 point**

$F_{net,x} = F_T \cos\theta - F_f$

$F_{net,x} = F_T\left(\frac{(x)}{\sqrt{H^2 + x^2}}\right) - F_f$

For correctly substituting the expression for the normal force from part (c)(i) into the expression for the force of friction **1 point**

$F_{net,x} = F_T\left(\frac{(x)}{\sqrt{H^2 + x^2}}\right) - \mu_k F_N$

$F_{net,x} = F_T\left(\frac{(x)}{\sqrt{H^2 + x^2}}\right) - \mu_k\left(mg - F_T\left(\frac{H}{\sqrt{H^2 + x^2}}\right)\right)$

Total for part (c) 5 points

(d) For any indication that the work done on the block by the string is due only to the horizontal component of the tension in the string **1 point**

$W = \int F_{T,x} dx$

For using the horizontal component of the force of tension consistent with part (c) **1 point**

For indicating that work is the integral of the force with respect to x, including limits or a constant of integration **1 point**

$W = \int_{x=L}^{x=0} -F_T\left(\frac{x}{\sqrt{H^2 + x^2}}\right) dx$

Total for part (d) 3 points

© 2022 College Board

(e)	For selecting "More work …" with an attempt at a relevant justification	**1 point**
	For a correct justification relating the smaller angle to a larger component of the force of tension, thus resulting in greater work.	**1 point**

Example Response

F_T stays the same for both halves, the displacement is the same in both halves, but from $x = L$ to $x = L/2$ the angle is smaller, resulting in a larger component of the tension force that aligns with the displacement.

Total for part (e) 2 points

Total for question 1 15 points

© 2022 College Board

Question 1

Begin your response to **QUESTION 1** on this page.

PHYSICS C: MECHANICS

SECTION II

Time—45 minutes

3 Questions

Directions: Answer all three questions. The suggested time is about 15 minutes for answering each of the questions, which are worth 15 points each. The parts within a question may not have equal weight. Show all your work in this booklet in the spaces provided after each part.

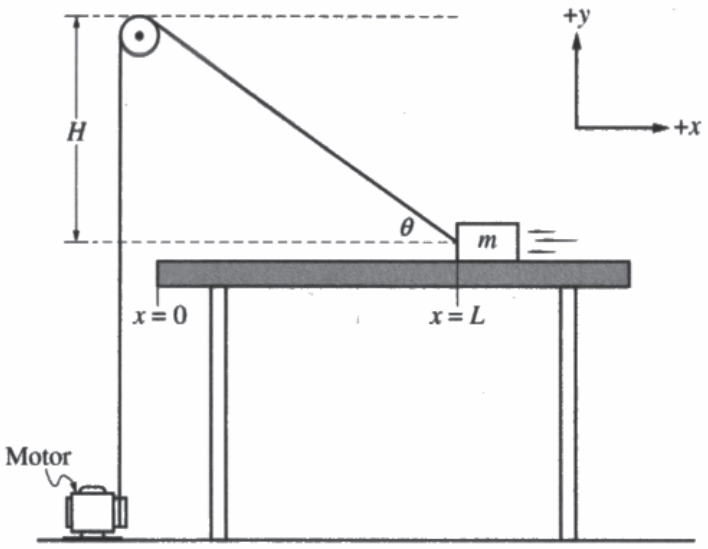

1. A block of mass m is pulled across a rough horizontal table by a string connected to a motor that is attached to the floor. The string passes over a pulley with negligible friction that is vertically aligned with the left edge of the table as shown. The string and pulley both have negligible mass. The pulley is at height H above the table. The motor exerts a constant force of tension F_T on the string, and the block remains in contact with the table at all times as the block slides across the table from $x = L$ to $x = 0$. The coefficient of kinetic friction between the table and the block is μ_k. Express all algebraic answers in terms of m, H, F_T, x, μ_k, L, and physical constants as appropriate.

Unauthorized copying or reuse of this page is illegal.

GO ON TO THE NEXT PAGE.

Use a pencil or a pen with black or dark blue ink. Do NOT write your name. Do NOT write outside the box.

Question 1

Continue your response to **QUESTION 1** on this page.

(a) On the dot below that represents the block, draw and label the forces (not components) that act on the block when the block is at $x = L$. Each force must be represented by a distinct arrow starting on, and pointing away from, the dot.

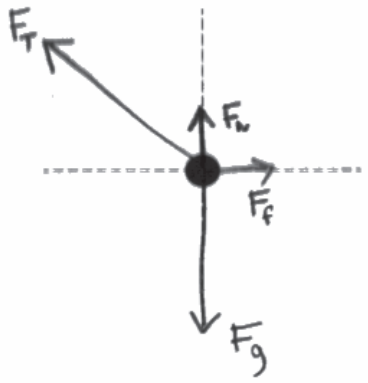

(b) Derive an expression for the angle θ that the string makes with the horizontal as a function of x.

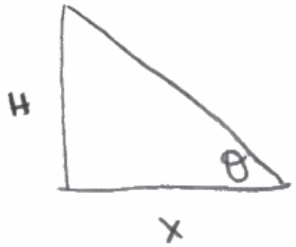

$$\tan(\theta) = \frac{H}{x}$$

$$\theta(x) = \tan^{-1}\left(\frac{H}{x}\right)$$

Unauthorized copying or reuse of this page is illegal.

GO ON TO THE NEXT PAGE.

Use a pencil or a pen with black or dark blue ink. Do NOT write your name. Do NOT write outside the box.

1004539

Q5143/3

Question 1

Continue your response to **QUESTION 1** on this page.

(c)

i. Derive an expression for the normal force F_N exerted on the block by the table as a function of the block's position x.

$F_{NET(y)} = 0 = \sum F_y$

$F_T \sin\theta + F_N - F_g = F_{NET}(y) = 0$

$F_T \sin\theta + F_N = F_g$

$F_N = mg - F_T \sin\theta$

$F_N = mg - F_T \sin\left(\tan^{-1}\left(\frac{H}{x}\right)\right)$

ii. Derive an expression for the magnitude of the net horizontal force F_{net} exerted on the block as a function of the position x.

$F_{NET(x)} = F_T \cos\theta - F_f$

$F_{NET} = F_T \cos\left(\tan^{-1}\left(\frac{H}{x}\right)\right) - \mu_k F_N$

$F_{NET} = F_T \cos\left(\tan^{-1}\left(\frac{H}{x}\right)\right) - \mu_k \left(mg - F_T \sin\left(\tan^{-1}\left(\frac{H}{x}\right)\right)\right)$

Unauthorized copying or reuse of this page is illegal.

GO ON TO THE NEXT PAGE.

Use a pencil or a pen with black or dark blue ink. Do NOT write your name. Do NOT write outside the box.

Question 1

Continue your response to **QUESTION 1** on this page.

(d) Write, but do not solve, an integral expression that could be used to solve for the work W done by the string on the block as the block moves from $x = L$ to $x = 0$.

$W = \int_0^L F_x \, dx$

$F_{Tx} = F_T \cos\theta = F_T \cos\left(\tan^{-1}\left(\frac{H}{x}\right)\right)$

$W = \int_0^L \left[F_T \cos\left(\tan^{-1}\left(\frac{H}{x}\right)\right)\right] dx$

(e) Does the string do more, less, or the same amount of work on the block as the block moves from $x = L$ to $x = \frac{L}{2}$ compared to when the block moves from $x = \frac{L}{2}$ to $x = 0$?

✓ More work when the block moves from $x = L$ to $x = \frac{L}{2}$

_____ Less work when the block moves from $x = L$ to $x = \frac{L}{2}$

_____ The same amount of work when the block moves from $x = L$ to $x = \frac{L}{2}$

Justify your answer.

The string is more horizontal so a greater component of F_T is doing work on the block.

Unauthorized copying or reuse of this page is illegal.

GO ON TO THE NEXT PAGE.

Use a pencil or a pen with black or dark blue ink. Do NOT write your name. Do NOT write outside the box.

Question 1

Begin your response to **QUESTION 1** on this page.

PHYSICS C: MECHANICS

SECTION II

Time—45 minutes

3 Questions

Directions: Answer all three questions. The suggested time is about 15 minutes for answering each of the questions, which are worth 15 points each. The parts within a question may not have equal weight. Show all your work in this booklet in the spaces provided after each part.

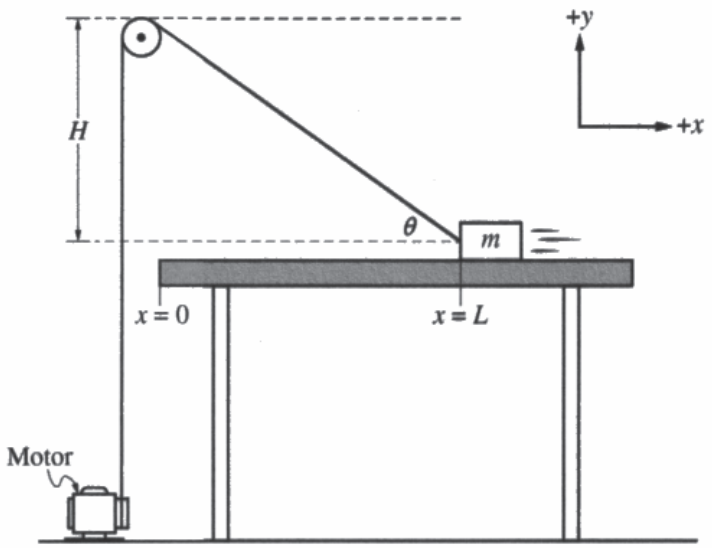

1. A block of mass m is pulled across a rough horizontal table by a string connected to a motor that is attached to the floor. The string passes over a pulley with negligible friction that is vertically aligned with the left edge of the table as shown. The string and pulley both have negligible mass. The pulley is at height H above the table. The motor exerts a constant force of tension F_T on the string, and the block remains in contact with the table at all times as the block slides across the table from $x = L$ to $x = 0$. The coefficient of kinetic friction between the table and the block is μ_k. Express all algebraic answers in terms of m, H, F_T, x, μ_k, L, and physical constants as appropriate.

Unauthorized copying or reuse of this page is illegal.

GO ON TO THE NEXT PAGE.

Use a pencil or a pen with black or dark blue ink. Do NOT write your name. Do NOT write outside the box.

Question 1

Continue your response to **QUESTION 1** on this page.

(a) On the dot below that represents the block, draw and label the forces (not components) that act on the block when the block is at $x = L$. Each force must be represented by a distinct arrow starting on, and pointing away from, the dot.

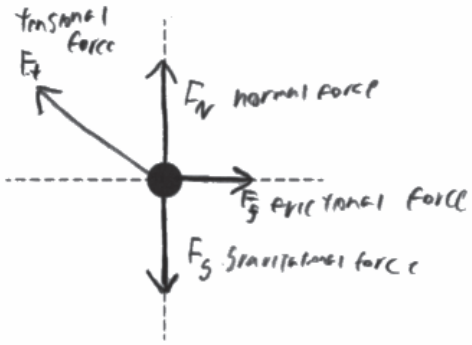

(b) Derive an expression for the angle θ that the string makes with the horizontal as a function of x.

$H = \tan\theta \cdot x$

$\frac{H}{x} = \tan\theta$

$\arctan\left(\frac{H}{x}\right) = \theta$

or

$\tan^{-1}\left(\frac{H}{x}\right) = \theta$

Unauthorized copying or reuse of this page is illegal.

GO ON TO THE NEXT PAGE.

Use a pencil or a pen with black or dark blue ink. Do NOT write your name. Do NOT write outside the box.

0020361

Q5143/3

Question 1

Continue your response to **QUESTION 1** on this page.

(c)

i. Derive an expression for the normal force F_N exerted on the block by the table as a function of the block's position x.

$F_g = F_N + F_{ty}$ $\quad F_N = mg - F_T \sin\theta$

$F_{ty} = F_T \sin\theta$

$F_g = mg$

$F_N = F_g - F_T \sin\theta$

ii. Derive an expression for the magnitude of the net horizontal force F_{net} exerted on the block as a function of the position x.

$F_N \cdot \mu_K = F_f$ $\quad F_N = mg - F_T \sin\theta$

$F_{Tx} = F_T \cos\theta$

$F_{net} = F_f - F_{Tx}$

$F_{net} = \mu_K (mg - F_T \sin\theta) - F_T \cos\theta$

$F_{net} = F_T \cos\theta - \mu_K (mg - F_T \sin\theta)$

Unauthorized copying or reuse of this page is illegal.

GO ON TO THE NEXT PAGE.

Use a pencil or a pen with black or dark blue ink. Do NOT write your name. Do NOT write outside the box.

Question 1

Continue your response to **QUESTION 1** on this page.

(d) Write, but do not solve, an integral expression that could be used to solve for the work W done by the string on the block as the block moves from $x = L$ to $x = 0$.

$\int_0^L F_{net}$

$\int_0^L F_t \cos\theta - \mu_K(mg - F_t \sin\theta)$

(e) Does the string do more, less, or the same amount of work on the block as the block moves from $x = L$ to $x = \frac{L}{2}$ compared to when the block moves from $x = \frac{L}{2}$ to $x = 0$?

___ More work when the block moves from $x = L$ to $x = \frac{L}{2}$

___ Less work when the block moves from $x = L$ to $x = \frac{L}{2}$.

X The same amount of work when the block moves from $x = L$ to $x = \frac{L}{2}$.

Justify your answer.

as the block approaches $x = 0$ the normal force will be decreasing as the y component of the string will be doing the same amount of work the whole time, however what will change it the work will be moving from being mostly x-component, To being mostly y-component.

Use a pencil or a pen with black or dark blue ink. Do NOT write your name. Do NOT write outside the box.

0020361

Q5143/5

Question 1

Begin your response to **QUESTION 1** on this page.

PHYSICS C: MECHANICS

SECTION II

Time—45 minutes

3 Questions

Directions: Answer all three questions. The suggested time is about 15 minutes for answering each of the questions, which are worth 15 points each. The parts within a question may not have equal weight. Show all your work in this booklet in the spaces provided after each part.

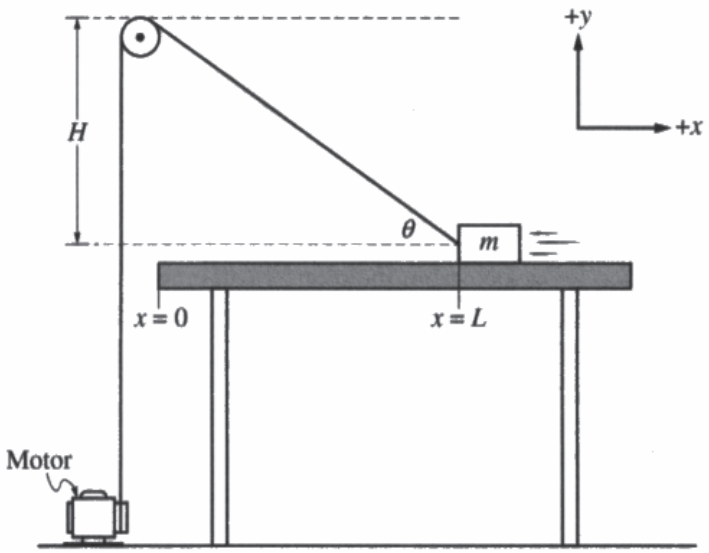

1. A block of mass m is pulled across a rough horizontal table by a string connected to a motor that is attached to the floor. The string passes over a pulley with negligible friction that is vertically aligned with the left edge of the table as shown. The string and pulley both have negligible mass. The pulley is at height H above the table. The motor exerts a constant force of tension F_T on the string, and the block remains in contact with the table at all times as the block slides across the table from $x = L$ to $x = 0$. The coefficient of kinetic friction between the table and the block is μ_k. Express all algebraic answers in terms of m, H, F_T, x, μ_k, L, and physical constants as appropriate.

Unauthorized copying or reuse of this page is illegal.

GO ON TO THE NEXT PAGE.

Use a pencil or a pen with black or dark blue ink. Do NOT write your name. Do NOT write outside the box.

Question 1

Continue your response to **QUESTION 1** on this page.

(a) On the dot below that represents the block, draw and label the forces (not components) that act on the block when the block is at $x = L$. Each force must be represented by a distinct arrow starting on, and pointing away from, the dot.

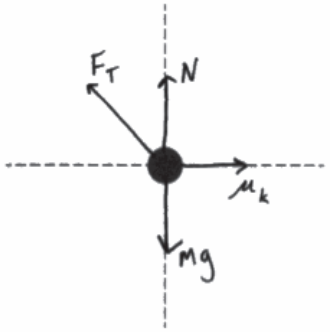

(b) Derive an expression for the angle θ that the string makes with the horizontal as a function of x.

$F_x = -F_T \cos\theta - f = ma$ $\quad f = \mu N$

$F_y = F_T \sin\theta + N - mg = 0$

$N = mg - F\sin\theta$

$-F_T \cos\theta - \mu_k(mg - F_T \sin\theta) = ma$

$-F_T \cos\theta - \mu_k mg - \mu_k F_T \sin\theta = ma$

$-F_T(\cos\theta + \mu_k \sin\theta) = ma + \mu_k mg$

$\cos\theta = \dfrac{ma + \mu_k mg}{-F_T} - \mu_k \sin\theta$

$v^2 = v_0^2 + 2a\Delta x$

$v^2 = 0 + 2a(-L)$

$-\dfrac{v^2}{2L} = a$

$$\theta = \cos^{-1}\left(\frac{ma + \mu_k mg}{-F_T} - \mu_k \sin\theta\right)$$

Unauthorized copying or reuse of this page is illegal.

GO ON TO THE NEXT PAGE.

Use a pencil or a pen with black or dark blue ink. Do NOT write your name. Do NOT write outside the box.

1002754

Q5143/3

Question 1

Continue your response to **QUESTION 1** on this page.

(c)

i. Derive an expression for the normal force F_N exerted on the block by the table as a function of the block's position x.

$-F_T\cos\theta - f = ma$

$f = \mu(mg - F\sin\theta)$

$N = mg - F\sin\theta$

$F_N = mg - F\left(\frac{H}{\sqrt{H^2+x^2}}\right)$

$F_N = mg - \frac{F_T H}{\sqrt{H^2+x^2}}$

ii. Derive an expression for the magnitude of the net horizontal force F_{net} exerted on the block as a function of the position x.

$F_{Net} = mg - \frac{F_T H}{\sqrt{H^2+x^2}}$

$F_x = -F_T\cos\theta - f = ma$

$F_y = F_T\sin\theta + N - mg$

Question 1

Continue your response to **QUESTION 1** on this page.

(d) Write, but do not solve, an integral expression that could be used to solve for the work W done by the string on the block as the block moves from $x = L$ to $x = 0$.

~~$F_T(\cos\theta + \mu\sin\theta) = ma + \mu mg$~~

$N = mg - F_T \sin\theta$

~~$\mu N = \frac{F_T H}{\sqrt{H^2+x^2}} = \mu mg + F_T \sin\theta$~~

$$F_T = \frac{\mu mg \cos\theta H}{\sqrt{H^2+x^2}}$$

(e) Does the string do more, less, or the same amount of work on the block as the block moves from $x = L$ to $x = \frac{L}{2}$ compared to when the block moves from $x = \frac{L}{2}$ to $x = 0$?

_____ More work when the block moves from $x = L$ to $x = \frac{L}{2}$

✓ Less work when the block moves from $x = L$ to $x = \frac{L}{2}$

_____ The same amount of work when the block moves from $x = L$ to $x = \frac{L}{2}$

Justify your answer.

B/c The angle θ gets more severe/steep so it is more difficult for horizontal movement as θ increases

Unauthorized copying or reuse of this page is illegal.

GO ON TO THE NEXT PAGE.

Use a pencil or a pen with black or dark blue ink. Do NOT write your name. Do NOT write outside the box.

1002754

Question 1

Note: Student samples are quoted verbatim and may contain spelling and grammatical errors.

Overview

The responses were expected to demonstrate the ability to:

- Draw free body diagrams indicating forces exerted on a system and the direction with appropriate labels.
- Determine an expression for an angle in terms of position. This requires the application of the geometric definitions of trigonometric functions and representing the angle in terms of the position for a moving object.
- Apply Newton's second law.
- Identify different types of forces, such as normal force, tension, gravitational force, and friction. Derive expressions for normal force and net horizontal force. This requires correct identification of the vector force components and representing those components in terms of the position of the object rather than the angle.
- Derive an expression for the work done by a varying force. This requires application of the integral definition of work and substituting/using the correct vector component.
- Correctly apply the dot product in a given scenario.

Sample: 1A
Score: 15

Part (a) earned 3 points. The first point was earned because normal force and gravitational force are drawn and labeled correctly. The second point was earned because tension force is drawn and labeled correctly. The third point was earned because the friction force is drawn and labeled correctly. Part (b) earned 2 points. The first point was earned because the derivation includes the distance x. The second point was earned because the angle is described correctly by a trigonometric expression in terms of x. Part (c)(i) earned 2 points. The first point was earned because Newton's second law is used correctly to derive the normal force by stating that the sum of the forces, consistent with part (a), is equal to zero. The second point was earned because the expression for the angle in part (b) is correctly substituted into the equation. Part (c)(ii) earned 3 points. The first point was earned because the sum of the forces is correctly written consistent with part (a). The second point was earned because the expression for the angle from part (b) is substituted correctly into the horizontal component of tension. The third point was earned because the normal force from part (c)(i) is substituted correctly into the friction force. Part (d) earned 3 points. The first point was earned because the answer correctly indicates that only the horizontal component of tension is responsible for the work done by the spring. The second point was earned because the expression for the horizontal component of tension consistent with part (c) is substituted correctly into the equation. The third point was earned because the integral has the correct limits and differential. Part (e) earned 2 points. The first point was earned because the correct choice is indicated and there is a relevant justification. The second point was earned because the justification is sufficient.

© 2022 College Board.
Visit College Board on the web: collegeboard.org.

Question 1 (continued)

Sample: 1B
Score: 8

Part (a) earned 3 points. The first point was earned because normal force and gravitational force are drawn and labeled correctly. The second point was earned because tension force is drawn and labeled correctly. The third point was earned because the friction force is drawn and labeled correctly. Part (b) earned 2 points. The first point was earned because the derivation includes the distance x. The second point was earned because the angle is described correctly by a trigonometric expression in terms of x. Part (c)(i) earned 0 points. The first point was not earned because Newton's second law is not used to derive the normal force. The response does not start with a statement that the sum of the forces, consistent with part (a), is equal to zero. The second point was not earned because the expression for the angle in part (b) is not substituted into the vertical component of tension.
Part (c)(ii) earned 2 points. The first point was earned because the sum of the forces is correctly written consistent with part (a). The second point was not earned because the expression for the angle from part (b) is not substituted correctly into the horizontal component of tension. The third point was earned because the normal force from part (c)(i) is substituted correctly into the friction force. Part (d) earned 1 point. The first point was not earned because the response does not indicate that only the horizontal component of tension is responsible for the work done by the spring. The second point was earned because the expression for the horizontal component of tension consistent with part (c) is substituted correctly into the equation. The third point was not earned because the integral is missing the differential. Part (e) earned 0 points. The first point was not earned because an incorrect choice is indicated. The second point was not earned because the justification is insufficient.

Sample: 1C
Score: 3

Part (a) earned 2 points. The first point was earned because normal force and gravitational force are drawn and labeled correctly. The second point was earned because tension force is drawn and labeled correctly. The third point was not earned because the friction force is drawn but is not labeled correctly. Part (b) earned 0 points. The first point was not earned because the derivation does not include the distance x. The second point was not earned because the angle is not described correctly by a trigonometric expression in terms of x. Part (c)(i) earned 1 point. The first point was not earned because Newton's second law is not used to derive the normal force. The response does not start with a statement that the sum of the forces, consistent with part (a), is equal to zero. The second point was earned because the correct expression for the angle in part (b) is substituted into the vertical component of tension. Part (c)(ii) earned 0 points. The first point was not earned because the sum of the forces is not correctly written consistent with part (a). The horizontal component of tension should be positive. The second point was not earned because the expression for the angle from part (b) is not substituted correctly into the horizontal component of tension. The third point was not earned because the normal force from part (c)(i) is not substituted into the friction force. Part (d) earned 0 points. The first point was not earned because the response does not indicate that only the horizontal component of tension is responsible for the work done by the spring. The second point was not earned because the expression for the horizontal component of tension consistent with part (c) is not substituted into the equation. The third point was not earned because there is no integral. Part (e) earned 0 points. The first point was not earned because an incorrect choice is indicated. The second point was not earned because the justification is insufficient.

© 2022 College Board.
Visit College Board on the web: collegeboard.org.