2022

AP® CollegeBoard

AP® Physics C: Mechanics

Sample Student Responses and Scoring Commentary Set 2

Inside:

Free-Response Question 1

- ☑ **Scoring Guidelines**
- ☑ **Student Samples**
- ☑ **Scoring Commentary**

© 2022 College Board. College Board, Advanced Placement, AP, AP Central, and the acorn logo are registered trademarks of College Board. Visit College Board on the web: collegeboard.org.

AP Central is the official online home for the AP Program: apcentral.collegeboard.org.

Question 1: Free-Response Question — 15 points

(a) For correctly drawing and labeling the force of gravity and the normal force on the sled — **1 point**

For correctly drawing and labeling the force of friction on the on the sled — **1 point**

For correctly drawing and labeling the force of tension on the on the sled — **1 point**

Example Response

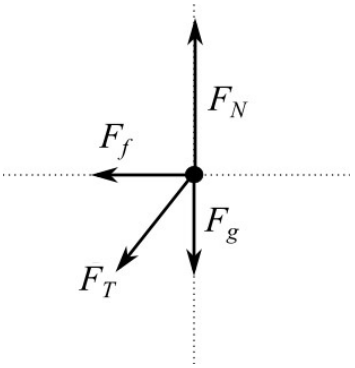

Scoring Notes:

- Examples of appropriate labels for the force due to gravity include: F_G, F_g, F_{grav}, W, mg, Mg, "grav force," "F Earth on block," "F on block by Earth," $F_{\text{Earth on block}}$, $F_{E,Block}$. The labels G and g are not appropriate labels for the force due to gravity. F_n, F_N, N, "normal force," "ground force," or similar labels may be used for the normal force. F_{string}, F_s, F_T, $F_{Tension}$, T, "string force," "tension force," or similar labels may be used for the tension force exerted by the string.
- A response with extraneous forces or vectors can earn a maximum of two points.

Total for part (a) — **3 points**

(b) For any correct trigonometric expression for θ in terms of the given quantities — **1 point**

$$\sin\theta = \frac{x}{\sqrt{y^2 + x^2}} \qquad \therefore \theta = \sin^{-1}\left(\frac{x}{\sqrt{y^2 + x^2}}\right)$$

OR

$$\cos\theta = \frac{y}{\sqrt{y^2 + x^2}} \qquad \therefore \theta = \cos^{-1}\frac{y}{\sqrt{y^2 + x^2}}$$

OR

$$\tan\theta = \frac{x}{y} \qquad \therefore \theta = \tan^{-1}\frac{x}{y}$$

Total for part (b) — **1 point**

© 2022 College Board

(c)(i) For beginning the derivation with Newton's second law to write an equation that is consistent with part (a). **1 point**

$\Sigma F = ma$

$F_N - F_{T,y} - F_g = 0$

$F_N = F_{T,y} + F_g$

Scoring Note: Derivation must start with a statement of Newton's second law to earn this point.

For correctly substituting the vertical component of the tension in terms of the given variables consistent with part (b) **1 point**

$F_N = mg + F_T \cos\theta$

$F_N = mg + F_T\left(\frac{y}{\sqrt{y^2 + x^2}}\right)$

(c)(ii) For summing the forces in the horizontal direction, consistent with parts (a) and (b) **1 point**

$F_{net} = -F_{T,x} - F_f$

For correctly substituting the horizontal component of the force of tension in terms of the given variables **1 point**

$F_{net} = -F_T \sin\theta - F_f$

$F_{net} = -F_T\left(\frac{x}{\sqrt{y^2 + x^2}}\right) - F_f$

For correctly substituting the expression for the normal force from part (c)(i) into the expression for the force of friction **1 point**

$F_{net} = -F_T\left(\frac{x}{\sqrt{y^2 + x^2}}\right) - \mu_k F_N$

$F_{net} = -F_T\left(\frac{x}{\sqrt{y^2 + x^2}}\right) - \mu_k\left(mg + F_T\left(\frac{y}{\sqrt{y^2 + x^2}}\right)\right)$

Total for part (c) 5 points

© 2022 College Board

(d) For using the integral definition of work to derive an expression for the work done by the force of tension **1 point**

$W = \int F \cdot dx$

For any indication that the work done on the sled by the string is due only to the horizontal component of the tension in the string **1 point**

$W = \int F_{T,x} dx$

For using the horizontal component of the force of tension consistent with part (b) or (c) **1 point**

$W = \int_{x=0}^{x=L} -F_T \left(\frac{x}{\sqrt{y^2 + x^2}} \right) dx$

For correct limits of integration, x= 0 to x= L, and indicating that the work done is negative **1 point**

let $u = y^2 + x^2$, then $du = 2x\, dx$

$W = -F_T \int_{x=0}^{x=L} \frac{1}{2} \left(\frac{1}{\sqrt{u}} \right) du$

$W = -F_T \left(\sqrt{y^2 + x^2} \right) \Big|_{x=0}^{x=L}$

$W = -F_T \left(\sqrt{y^2 + L^2} - \sqrt{y^2} \right)$

Total for part (d) 4 points

(e) For selecting "$E_1 > E_2$" with an attempt at a relevant justification **1 point**

For a justification that correctly relates the force of friction to the normal force, and the normal force to the position or the angle **1 point**

Example Response

The vertical component of the string force is the largest when the string is more vertical $(0 < x < L)$*. A larger vertical component of the string tension leads to a larger normal force and, hence, a larger friction force.*

Total for part (e) 2 points

Total for question 1 15 points

© 2022 College Board

Question 1

Begin your response to **QUESTION 1** on this page.

PHYSICS C: MECHANICS

SECTION II

Time—45 minutes

3 Questions

Directions: Answer all three questions. The suggested time is about 15 minutes for answering each of the questions, which are worth 15 points each. The parts within a question may not have equal weight. Show all your work in this booklet in the spaces provided after each part.

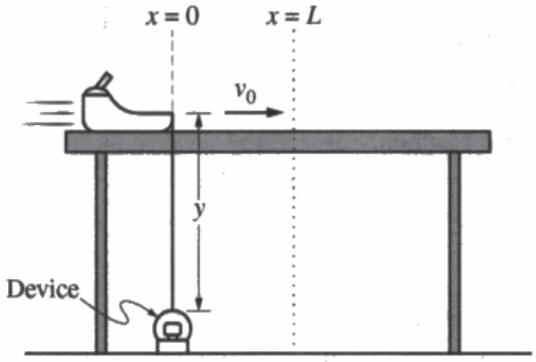

Figure 1

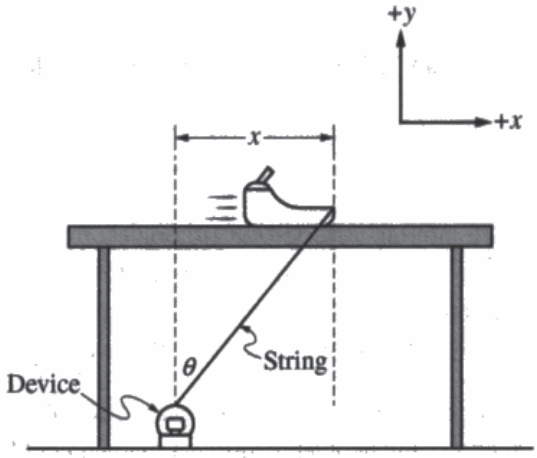

Figure 2

Note: Figures not drawn to scale.

1. A small sled slides across a rough horizontal table with an initial velocity v_0. The coefficient of kinetic friction between the sled and the table is μ_k. A string connects the sled to a device on the ground. The device maintains constant tension F_T in the string by unwinding the string as the sled slides to the right. The total mass of the sled is m. The string is attached to the device at $x = 0$ and at a height of y, as shown in Figure 1. The horizontal position of the sled is represented by x, as shown in Figure 2. Express all algebraic answers in terms of m, μ_k, F_T, x, y, and physical constants, as appropriate.

Unauthorized copying or reuse of this page is illegal.

GO ON TO THE NEXT PAGE.

Use a pencil or a pen with black or dark blue ink. Do NOT write your name. Do NOT write outside the box.

Question 1

Continue your response to **QUESTION 1** on this page.

(a) On the dot below that represents the sled, draw and label the forces (not components) that are exerted on the sled a short time after $t = 0$ but before the sled has come to rest. Each force must be represented by a distinct arrow starting on, and pointing away from, the dot.

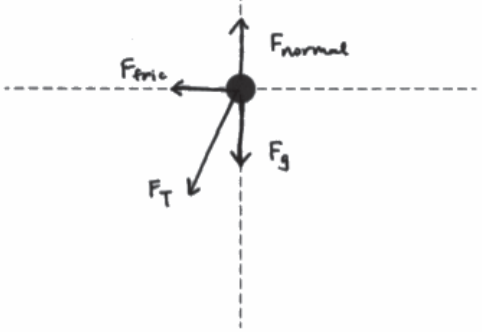

(b) Determine an expression for the angle θ that the string makes with the vertical when the sled has traveled a horizontal distance x.



$\rightarrow \tan\theta = \frac{x}{y} \rightarrow \boxed{\theta = \tan^{-1}\left(\frac{x}{y}\right)}$

Unauthorized copying or reuse of this page is illegal.

GO ON TO THE NEXT PAGE.

Use a pencil or a pen with black or dark blue ink. Do NOT write your name. Do NOT write outside the box.

0006269

Q5140/3

Question 1

Continue your response to **QUESTION 1** on this page.

(c)

i. Derive an expression for the normal force F_N exerted on the sled by the table as a function of the position x.

No vertical acceleration of the sled.

Since $F_{net} = ma_y$, the F_{net} in vertical direction = 0.



← all vertical forces on the sled are here

$F_N = -(F_T + F_g)$. The vertical component of F_T is $F_T \cos\theta$, where $\theta = \tan^{-1}\left(\frac{x}{y}\right)$.

$F_T \cos\theta = F_T \cdot \frac{y}{\sqrt{x^2+y^2}}$

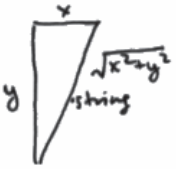

$\rightarrow F_N = F_{T,\text{vertical}} + F_g = \boxed{F_T \cdot \frac{y}{\sqrt{x^2+y^2}} + mg}$

ii. Derive an expression for the magnitude of the net horizontal force F_{net} exerted on the sled as a function of the position x.

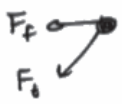

all horizontal forces are depicted on the left.

$F_f = \mu_k F_N = \mu_k\left(F_T \cdot \frac{y}{\sqrt{x^2+y^2}} + mg\right)$

$F_{T,\text{horizontal}} = F_T \cdot \frac{x}{\sqrt{x^2+y^2}}$ by same reasoning as part (c)

$\rightarrow$ magnitude of F_{net} =

~~$F_T \cdot \frac{x}{\sqrt{x^2+y^2}}$~~

$\boxed{\mu_k\left(F_T \cdot \frac{y}{\sqrt{x^2+y^2}} + mg\right) + F_T \cdot \frac{x}{\sqrt{x^2+y^2}}}$

(direction: leftward)

Unauthorized copying or reuse of this page is illegal.

GO ON TO THE NEXT PAGE.

Use a pencil or a pen with black or dark blue ink. Do NOT write your name. Do NOT write outside the box.

Question 1

Continue your response to **QUESTION 1** on this page.

(d) Derive an expression for the work W done by the string on the sled as the sled moves from $x = 0$ to $x = L$.

since movement of sled is in horizontal direction, we only consider the horizontal component of F_T to find work.

this horizontal component = $F_T \cdot \frac{x}{\sqrt{x^2+y^2}}$.

$$W = \int_0^L F\,dx = \int_0^L -F_T \cdot \frac{x}{\sqrt{x^2+y^2}}\,dx = -F_T \cdot \int_0^L \frac{x}{\sqrt{x^2+y^2}}\,dx.$$

Let $u = x^2 + y^2 \Rightarrow du = 2x\,dx \Rightarrow dx = \frac{du}{2x}$. Then new bounds are $y^2 \to L^2 + y^2$.

$$-F_T \cdot \int_0^L \frac{x}{\sqrt{x^2+y^2}}\,dx$$

$$= -F_T \cdot \int_{y^2}^{L^2+y^2} \frac{1}{2\sqrt{u}}\,du = -F_T \left(u^{1/2} \Big|_{y^2}^{L^2+y^2} \right)$$

$$= \boxed{-F_T\left(\sqrt{L^2+y^2} - y\right)}$$

(e) The sled comes to rest after traveling a horizontal distance $x = 2L$. As the system slides from $x = 0$ to $x = L$, the energy dissipated by friction is E_1. As the sled slides from $x = L$ to $x = 2L$, the energy dissipated by friction is E_2. Is E_1 greater than, less than, or equal to E_2 ?

✓ $E_1 > E_2$ ___ $E_1 < E_2$ ___ $E_1 = E_2$

Justify your answer.

From $x=0$ to $x=L$, the vertical component of the tension in the string is larger, so the normal force is larger. As a result, the frictional force is larger. Since both $x=0$ to $x=L$ and $x=L$ to $x=2L$ cover the same amount of distance, and friction has a greater magnitude in the former interval, it does a greater magnitude of work and dissipates more energy.

Unauthorized copying or reuse of this page is illegal.

GO ON TO THE NEXT PAGE.

Use a pencil or a pen with black or dark blue ink. Do NOT write your name. Do NOT write outside the box.

0006269

Q5140/5

Question 1

Begin your response to **QUESTION 1** on this page.

PHYSICS C: MECHANICS

SECTION II

Time—45 minutes

3 Questions

Directions: Answer all three questions. The suggested time is about 15 minutes for answering each of the questions, which are worth 15 points each. The parts within a question may not have equal weight. Show all your work in this booklet in the spaces provided after each part.

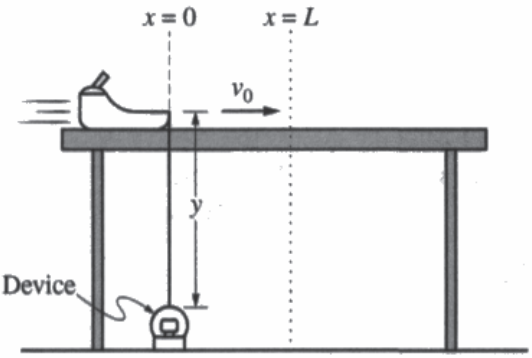

Figure 1

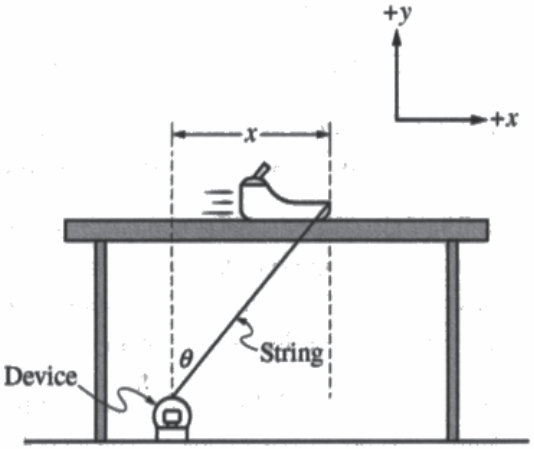

Figure 2

Note: Figures not drawn to scale.

1. A small sled slides across a rough horizontal table with an initial velocity v_0. The coefficient of kinetic friction between the sled and the table is μ_k. A string connects the sled to a device on the ground. The device maintains constant tension F_T in the string by unwinding the string as the sled slides to the right. The total mass of the sled is m. The string is attached to the device at $x = 0$ and at a height of y, as shown in Figure 1. The horizontal position of the sled is represented by x, as shown in Figure 2. Express all algebraic answers in terms of m, μ_k, F_T, x, y, and physical constants, as appropriate.

Unauthorized copying or reuse of this page is illegal.

GO ON TO THE NEXT PAGE.

Use a pencil or a pen with black or dark blue ink. Do NOT write your name. Do NOT write outside the box.

Question 1

Continue your response to **QUESTION 1** on this page.

(a) On the dot below that represents the sled, draw and label the forces (not components) that are exerted on the sled a short time after $t = 0$ but before the sled has come to rest. Each force must be represented by a distinct arrow starting on, and pointing away from, the dot.

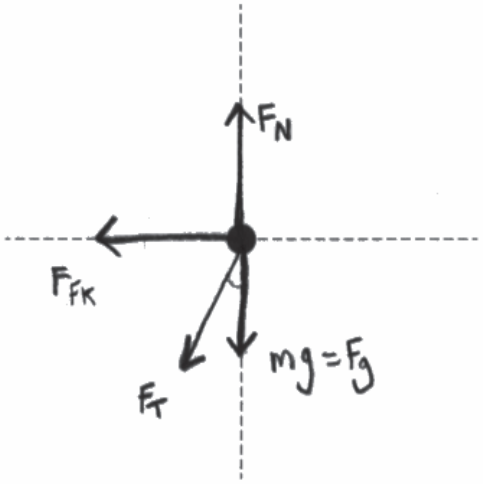

(b) Determine an expression for the angle θ that the string makes with the vertical when the sled has traveled a horizontal distance x.



$$\frac{x}{y} = \tan\theta$$

$$\theta = \tan^{-1}\left(\frac{x}{y}\right)$$

nauthorized copying or reuse of this page is illegal.

GO ON TO THE NEXT PAGE.

Use a pencil or a pen with black or dark blue ink. Do NOT write your name. Do NOT write outside the box.

1001549

5140/3

Question 1

Continue your response to **QUESTION 1** on this page.

(c)

i. Derive an expression for the normal force F_N exerted on the sled by the table as a function of the position x.

$F_N = F_{T_y} + F_g$

$mg + F_T \cos\theta = F_N$

$\theta = \tan^{-1}\left(\frac{x}{y}\right)$

$F_N = mg + F_T \cos\left(\tan^{-1}\left(\frac{x}{y}\right)\right)$

ii. Derive an expression for the magnitude of the net horizontal force F_{net} exerted on the sled as a function of the position x.

$F_{NET} = -F_{TX} - F_{FK}$

$= -F_T \sin\theta - F_N N_K$

$F_{NET} = -F_T \sin\left(\tan^{-1}\left(\frac{x}{y}\right)\right) - N_K\left(mg + F_T \cos\left(\tan^{-1}\left(\frac{x}{y}\right)\right)\right)$

Unauthorized copying or reuse of this page is illegal.

GO ON TO THE NEXT PAGE.

Use a pencil or a pen with black or dark blue ink. Do NOT write your name. Do NOT write outside the box.

Question 1

Continue your response to **QUESTION 1** on this page.

(d) Derive an expression for the work W done by the string on the sled as the sled moves from $x = 0$ to $x = L$.

$W = F \cdot d$ PARALLEL FORCE → ~~VERTICAL~~ HORIZONTAL

$W = -F_{TX} \cdot (L - 0)$

$= -F_T \sin\theta\,(L - 0) = -F_T \sin(\tan^{-1}(\frac{x}{y})) \cdot L = W$

(e) The sled comes to rest after traveling a horizontal distance $x = 2L$. As the system slides from $x = 0$ to $x = L$, the energy dissipated by friction is E_1. As the sled slides from $x = L$ to $x = 2L$, the energy dissipated by friction is E_2. Is E_1 greater than, less than, or equal to E_2 ?

___ $E_1 > E_2$ ___ $E_1 < E_2$ X $E_1 = E_2$

Justify your answer.

$\frac{1}{2}mv_0^2 - E_1 - E_2 = 0$

$E_2 = E_1$ BECAUSE THE FRICTIONAL FORCE IS CONSTANT AND THE DISTANCE TRAVELED IS THE SAME, SO $\Delta E = F \cdot d$, SO THEY ARE EQUAL

nauthorized copying or reuse of this page is illegal.

GO ON TO THE NEXT PAGE.

Use a pencil or a pen with black or dark blue ink. Do NOT write your name. Do NOT write outside the box.

1001549

Question 1

Begin your response to **QUESTION 1** on this page.

PHYSICS C: MECHANICS

SECTION II

Time—45 minutes

3 Questions

Directions: Answer all three questions. The suggested time is about 15 minutes for answering each of the questions, which are worth 15 points each. The parts within a question may not have equal weight. Show all your work in this booklet in the spaces provided after each part.

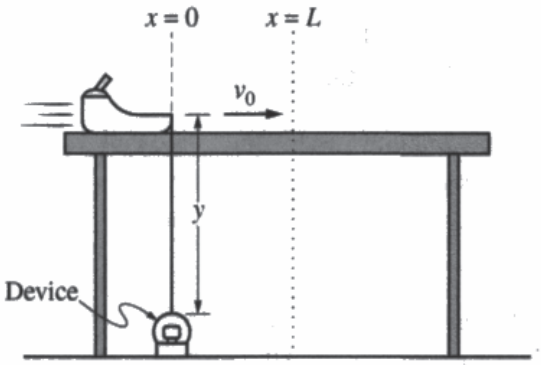

Figure 1

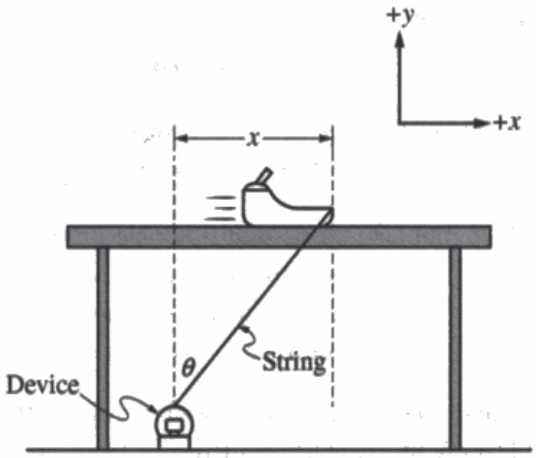

Figure 2

Note: Figures not drawn to scale.

1. A small sled slides across a rough horizontal table with an initial velocity v_0. The coefficient of kinetic friction between the sled and the table is μ_k. A string connects the sled to a device on the ground. The device maintains constant tension F_T in the string by unwinding the string as the sled slides to the right. The total mass of the sled is m. The string is attached to the device at $x = 0$ and at a height of y, as shown in Figure 1. The horizontal position of the sled is represented by x, as shown in Figure 2. Express all algebraic answers in terms of m, μ_k, F_T, x, y, and physical constants, as appropriate.

Unauthorized copying or reuse of this page is illegal.

GO ON TO THE NEXT PAGE.

Use a pencil or a pen with black or dark blue ink. Do NOT write your name. Do NOT write outside the box.

Question 1

Continue your response to **QUESTION 1** on this page.

(a) On the dot below that represents the sled, draw and label the forces (not components) that are exerted on the sled a short time after $t = 0$ but before the sled has come to rest. Each force must be represented by a distinct arrow starting on, and pointing away from, the dot.

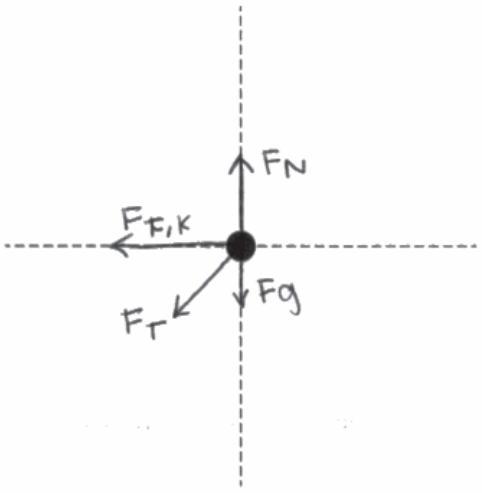

(b) Determine an expression for the angle θ that the string makes with the vertical when the sled has traveled a horizontal distance x.

~~sin(θ) = x/y~~

$\tan(\theta) = \frac{x}{y}$

$\theta = \tan^{-1}\left(\frac{x}{y}\right)$

~~θ = tan⁻¹(x/y)~~

Unauthorized copying or reuse of this page is illegal.

GO ON TO THE NEXT PAGE.

Use a pencil or a pen with black or dark blue ink. Do NOT write your name. Do NOT write outside the box.

0006853

Q5140/3

Question 1

Continue your response to **QUESTION 1** on this page.

(c)

i. Derive an expression for the normal force F_N exerted on the sled by the table as a function of the position x.

$F_N = mg + F_T\cos(\theta)$

$\theta = \tan^{-1}\left(\frac{x}{y}\right)$

$\tan(\theta) = \frac{x}{y}$

$\frac{\sin(\theta)}{\cos(\theta)} = \frac{x}{y}$

$\cos(\theta) = \frac{\sin(\theta)y}{x}$

$F_N = mg + F_T\left(\frac{\sin(\theta)y}{x}\right)$

ii. Derive an expression for the magnitude of the net horizontal force F_{net} exerted on the sled as a function of the position x.

$F_{net} = F_{fric} + F_T\sin(\theta)$

$F_{fric} = mg\mu_K$

$\frac{\sin(\theta)}{\cos(\theta)} = \frac{x}{y}$

$\sin(\theta) = \frac{x\cos(\theta)}{y}$

$F_{net} = mg\mu_K + \frac{x\cos(\theta)}{y}$

Unauthorized copying or reuse of this page is illegal.

GO ON TO THE NEXT PAGE.

Use a pencil or a pen with black or dark blue ink. Do NOT write your name. Do NOT write outside the box.

Question 1

Continue your response to **QUESTION 1** on this page.

(d) Derive an expression for the work W done by the string on the sled as the sled moves from $x = 0$ to $x = L$.

work = force · distance

force = F_T

$$\int_0^L F_T \, dx$$

(e) The sled comes to rest after traveling a horizontal distance $x = 2L$. As the system slides from $x = 0$ to $x = L$, the energy dissipated by friction is E_1. As the sled slides from $x = L$ to $x = 2L$, the energy dissipated by friction is E_2. Is E_1 greater than, less than, or equal to E_2 ?

___ $E_1 > E_2$ ___ $E_1 < E_2$ X $E_1 = E_2$

Justify your answer.

the change in energy is the work done on the sled by friction. Because work = force · distance, and both the force of friction & the distance travelled in E_1 & E_2 are the same, $E_1 = E_2$.

Unauthorized copying or reuse of this page is illegal.

GO ON TO THE NEXT PAGE.

Use a pencil or a pen with black or dark blue ink. Do NOT write your name. Do NOT write outside the box.

0006853

Q5140/5

Question 1

Note: Student samples are quoted verbatim and may contain spelling and grammatical errors.

Overview

The responses were expected to demonstrate the ability to:

- Draw free body diagrams indicating forces exerted on a system and their directions with appropriate labels.
- Determine an expression for an angle in terms of position. This requires application of the geometric definition of a trigonometric function and representing the angle in terms of the position for a moving object.
- Apply Newton's second law.
- Identify different types of forces, such as the normal force, tension, gravitational force, and friction.
- Derive expressions for the normal force and the net horizontal force. This requires correct identification of the vector force components and representing those components in terms of the position of the object rather than the angle.
- Derive an expression for the work done by a varying force. This requires application of the integral definition of work and substituting/using the correct vector component.
- Compare the energy dissipated in two intervals of motion and justify the comparison. This requires relating the friction force to the changing normal force and a justification for why the normal force changes with position.

Sample: 1A
Score: 15

Part (a) earned 3 points. The first point was earned for correctly showing the normal force and gravity force with appropriate labels. The magnitudes are not considered for scoring. The second point was earned for correctly showing the friction force with an appropriate label. The third point was earned for correctly showing the tension force from the string with an appropriate label. Part (b) earned 1 point. The point was earned for showing a correct expression that relates the angle θ to the position x. Part (c)(i) earned 2 points. The first point was earned by beginning derivation with a summation of forces or a statement of Newton's second law and showing or implying that the sum of the forces is zero. The derivation proceeds correctly from this point. The second point was earned by representing the vertical component of the tension force with correct substitution consistent with part (b). Part (c)(ii) earned 3 points. The first point was earned by beginning derivation with a summation of forces or a statement of Newton's second law. In this response, the work proceeds in reverse, identifying the components and then combining them to the net force. The second point was earned for correctly representing the horizontal component of the tension force with correct substitution consistent with part (b). The third point was earned for correctly using the normal force as written in part (c)(i). This point can be earned for consistency with part (c)(i) even if part (c)(i) is not correct. Part (d) earned 4 points. The first point was earned for beginning with the integral definition of work and using it to derive the expression. The second point was earned by indicating that the work is done only by the horizontal component of the tension force. The third point was earned by correctly substituting for the horizontal component of the tension consistent with prior work. The fourth point was earned for having the correct limits of integration and indicating that the work done is negative. Part (e) earned 2 points. The first point was earned by selecting the correct check box and attempting a relevant justification. The second point was earned for a justification correctly connecting the changing position to the changing normal force and the normal force to the friction force.

© 2022 College Board.
Visit College Board on the web: collegeboard.org.

Question 1 (continued)

Sample: 1B
Score: 10

Part (a) earned 3 points. The first point was earned for correctly showing the normal force and gravity force with appropriate labels. The second point was earned for correctly showing the friction force with an appropriate label. The third point was earned for correctly showing the tension force from the string with an appropriate label. Part (b) earned 1 point. The point was earned for showing a correct expression that relates the angle θ to the position *x*. Part (c)(i) earned 1 point. The first point was not earned. The response does not begin with a summation of forces or statement of Newton's second law. $F_N = F_{Ty} + F_g$ is not an acceptable starting point but is a second step in the derivation. The second point was earned by representing the vertical component of the tension force with correct substitution consistent with part (b). Note that this response represents θ in terms of $\tan^{-1}\frac{x}{y}$, rather than replacing the trig functions with ratios containing *x* or *y* and $x^2 + y^2$. Part (c)(ii) earned 3 points. The first point was earned by beginning derivation with a summation of forces or a statement of Newton's second law. The second point was earned for correctly representing the horizontal component of the tension force with correct substitution consistent with part (b). The third point was earned for correctly using the normal force as written in part (c)(i). Part (d) earned 2 points. The first point was not earned. The response did not begin with the integral definition of work. The second point was earned by indicating that the work is done only by the horizontal component of the tension force. The third point was earned by correctly substituting for the horizontal component of the tension consistent with prior work. The fourth point was not earned. The response had no limits of integration. Part (e) earned 0 points. The first point was not earned. The response selects the incorrect check box. The second point was not earned. No points can be earned for justification if the incorrect box is checked.

Sample: 1C
Score: 5

Part (a) earned 3 points. The first point was earned for correctly showing the normal force and gravity force with appropriate labels. The second point was earned for correctly showing the friction force with an appropriate label. The third point was earned for correctly showing the tension force from the string with an appropriate label. Part (b) earned 1 point. The point was earned for showing a correct expression that relates the angle θ to the position *x*. Part (c)(i) earned 0 points. The first point was not earned. The response does not begin with a summation of forces or statement of Newton's second law. The second point was not earned. The response leaves θ in the vector component of the tension force, and θ is not an allowed symbol for algebraic answers. Because there is an expression for θ in terms of *x* and *y*, that expression must be used to substitute for θ. Part (c)(ii) earned 1 point. The first point was earned by beginning derivation with a summation of forces or a statement of Newton's second law. The second point was not earned. The response makes an incorrect substitution for θ into the vector component of the tension force. The third point was not earned. The response incorrectly substitutes for the normal force, inconsistent with part (c)(i). Part (d) earned 0 points. The first point was not earned. The response does begin with the integral definition of work but does not use the integral in further steps. The second point was not earned. The response does not indicate that the work is done only by the horizontal component of the tension force. The third point was not earned. The response incorrectly substitutes for the horizontal component of the tension, consistent with prior work. The fourth point was not earned. The response does not indicate that the work is negative. Part (e) earned 0 points. The first point was not earned. The response selects the incorrect check box. The second point was not earned. No points can be earned for justification if the incorrect box is checked.

© 2022 College Board.
Visit College Board on the web: collegeboard.org.