2022

AP CollegeBoard

AP® Physics C: Mechanics

Sample Student Responses and Scoring Commentary Set 1

Inside:

Free-Response Question 2

- ☑ **Scoring Guidelines**
- ☑ **Student Samples**
- ☑ **Scoring Commentary**

© 2022 College Board. College Board, Advanced Placement, AP, AP Central, and the acorn logo are registered trademarks of College Board. Visit College Board on the web: collegeboard.org.

AP Central is the official online home for the AP Program: apcentral.collegeboard.org.

Question 2: Free-Response Question — 15 points

(a)

For selecting "Equal to" with an attempt at a relevant justification — **1 point**

For a correct justification — **1 point**

Example Response

Newton's third law says equal/opposite forces, time intervals are same during same collision, so magnitudes of impulse must be equal.

Total for part (a) 2 points

(b)

For correctly drawing the momentum for carts 1 and 2 for the time interval $0 < t < t_C$: Linear increasing momentum for Cart 1 and zero for Cart 2 — **1 point**

For drawing a horizontal line for Cart 1 when $t > t_C$ that is smaller in magnitude than the momentum of Cart 1 at time $t = t_C$ — **1 point**

For drawing a horizontal line for Cart 2 when $t > t_C$ that is greater in magnitude than the momentum of Cart 1 after time $t = t_C$ — **1 point**

For carts 1 and 2 having a change in momentum that is equal in magnitude, such that Cart 1 loses momentum and Cart 2 gains momentum or a response with changes in momentum consistent with the response in part (a) — **1 point**

Example Response

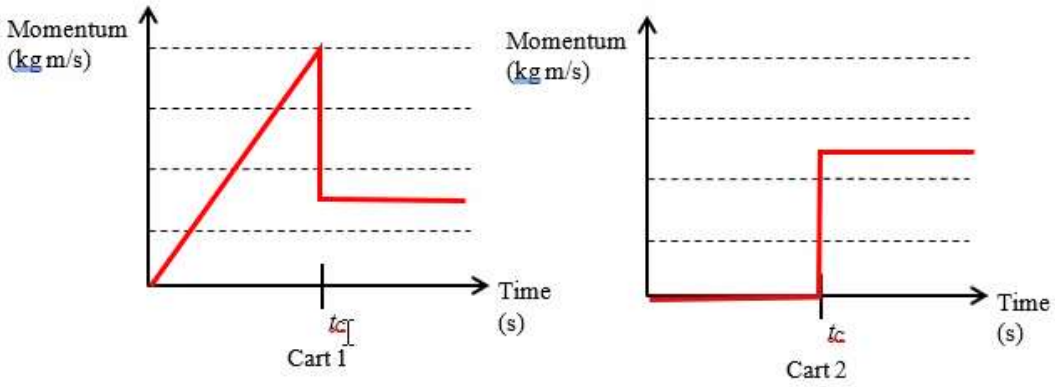

Total for part (b) 4 points

(c)

For using conservation of energy to find the speed of Cart 1 at the bottom of the incline — **1 point**

OR

For a correct substitution of acceleration and displacement in a kinematics equation to find the speed of Cart 1 at the bottom of the incline

For using conservation of momentum to find the speed of the two-cart system after the collision — **1 point**

For combining correct equations from above — **1 point**

© 2022 College Board

Example Response

Conservation of energy:

$m_1 gH = \frac{1}{2} m_1 v_1^2$

$v_1 = \sqrt{2gH}$

OR

$v_f^2 = v_i^2 + 2g\sin(\theta)L$

$H = L\sin(\theta)$

$v_f^2 = v_i^2 + 2g\sin(\theta)\left(\frac{H}{\sin\theta}\right)$

$v_f^2 = 2gH$

Conservation of momentum:

$m_1 v_1 = (m_1 + m_2) v_f$

$v_f = \frac{m_1}{m_1 + m_2} v_1$

Combining:

$v_f = \frac{m_1}{m_1 + m_2}\sqrt{2gH}$

$v_f = \sqrt{2g}\left(\frac{m_1}{m_1 + m_2}\right)\sqrt{H}$

Total for part (c) 3 points

© 2022 College Board

(d)(i) For drawing an appropriate best-fit line including approximately the same number of points above and below the line **1 point**

Example Response

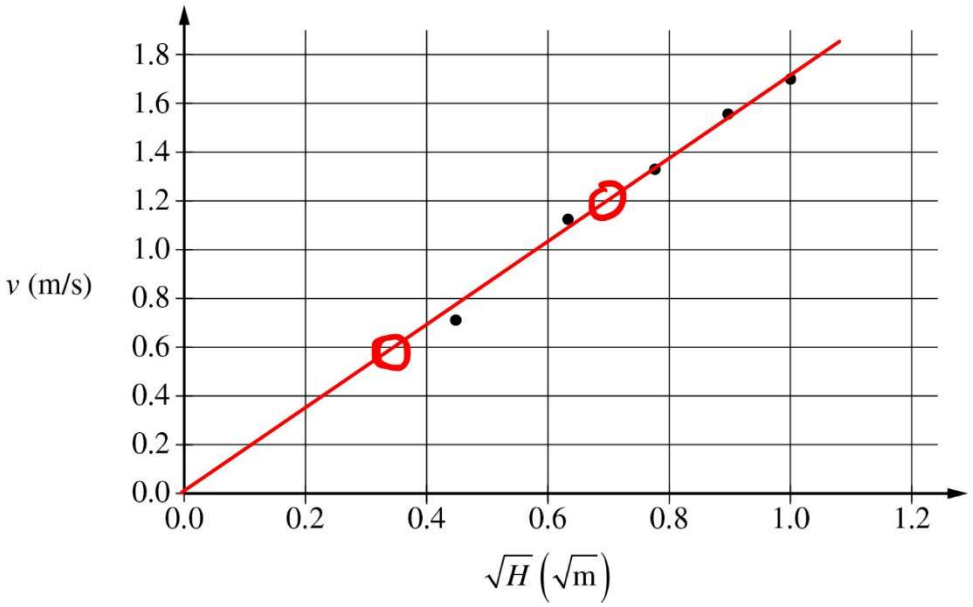

(d)(ii) For calculating the slope using two points on the best-fit line **1 point**

For correctly relating the slope of the best-fit line to the mass of Cart 2 **1 point**

For a correct mass of Cart 2 **1 point**

Example Response

$$slope = \frac{(1.20 - 0.60)\,\text{m/s}}{(0.70 - 0.35)\sqrt{\text{m}}} = 1.72\,\frac{\sqrt{\text{m}}}{\text{s}}$$

$$slope = \frac{m_1}{m_1 + m_2}\sqrt{2g}$$

$$m_2 = \frac{m_1\sqrt{2g}}{slope} - m_1$$

$$m_2 = \frac{(0.25\ \text{kg})\sqrt{2\left(9.8\,\frac{\text{m}}{\text{s}^2}\right)}}{1.72\,\frac{\sqrt{\text{m}}}{\text{s}}} - (0.25\ \text{kg})$$

$$\therefore m_2 = 0.39\ \text{kg}$$

Scoring Note: Acceptable responses for mass are 0.30 to 0.60 kg

Total for part (d) 4 points

© 2022 College Board

(e)	For selecting "$m_1' < 0.250$ kg" with an attempt at a relevant justification	**1 point**
	For a correct justification	**1 point**

Example Response

A smaller m_2 indicates that the initial energy and momentum was smaller. With identical slope and height H this means that the mass m_1' must be smaller.

Total for part (e) 2 points

Total for question 2 15 points

© 2022 College Board

Question 2

Begin your response to **QUESTION 2** on this page.

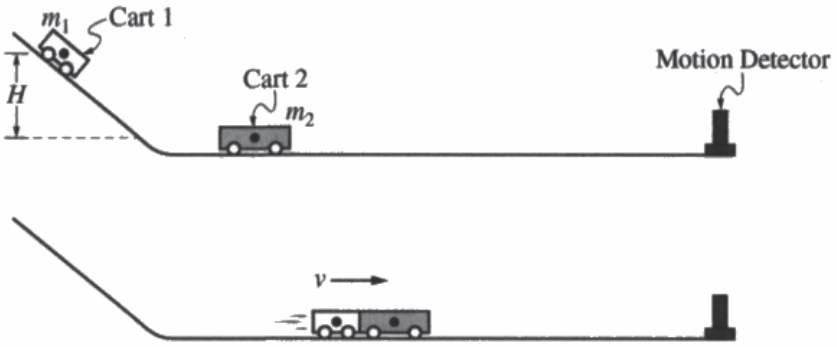

2. Cart 1 of mass m_1 is held at rest above the bottom of an incline. Cart 2 has mass m_2, where $m_2 > m_1$, and is at rest at the bottom of the incline. At time $t = 0$, Cart 1 is released and then travels down the incline and smoothly transitions to the horizontal section. The center of mass of Cart 1 moves a vertical distance of H, as shown. At time t_C, Cart 1 reaches the bottom of the incline and immediately collides with and sticks to Cart 2. After the collision, the two-cart system moves with constant speed v. Frictional and rotational effects are negligible.

(a) During the collision, is the impulse on Cart 1 from Cart 2 greater than, less than, or equal to the magnitude of the impulse on Cart 2 from Cart 1 ?

___ Greater than ___ Less than J Equal to

Justify your answer.

The impulse is equal during the collision, because they each exert the same force over the same time on each other.

Unauthorized copying or reuse of this page is illegal.

GO ON TO THE NEXT PAGE.

Use a pencil or a pen with black or dark blue ink. Do NOT write your name. Do NOT write outside the box.

Question 2

Continue your response to **QUESTION 2** on this page.

(b) On the following axes, draw graphs of the magnitude of the momentum of each cart as a function of time t, before and after t_C. The collision occurs in a negligible amount of time. The grid lines on each graph are drawn to the same scale.

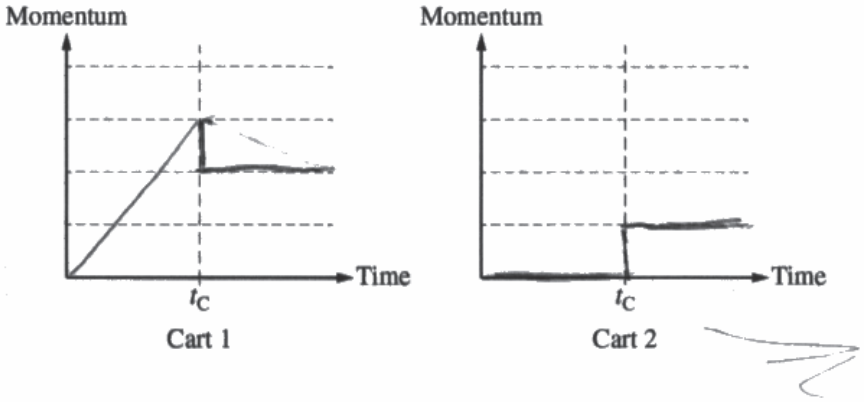

(c) Show that the velocity v of the two-cart system after the collision is given by the equation

$$v = \sqrt{2g}\left(\frac{m_1}{m_1 + m_2}\right)\sqrt{H}.$$

$m_1 v_1 + m_2 v_2 = v_F(m_1 + m_2)$

$m_1\sqrt{2gH} + 0 = v_F(m_1 + m_2)$

$\frac{1}{2}mv_1^2 = mgH$

$v_1 = \sqrt{2gH}$

$v_F = \frac{m_1\sqrt{2gH}}{(m_1 + m_2)}$

Unauthorized copying or reuse of this page is illegal.

GO ON TO THE NEXT PAGE.

Use a pencil or a pen with black or dark blue ink. Do NOT write your name. Do NOT write outside the box.

1001581

Q5143/7

Question 2

Continue your response to **QUESTION 2** on this page.

(d) A group of students use the setup to perform an experiment. They measure the mass of Cart 1 to be $m_1 = 0.250\ \text{kg}$. The mass of Cart 2 is unknown. The students perform several trials and in each trial, Cart 1 is released from a different height H and the final velocity of the two-cart system is measured. The students graph v as a function of $\sqrt{H}$, as shown below.

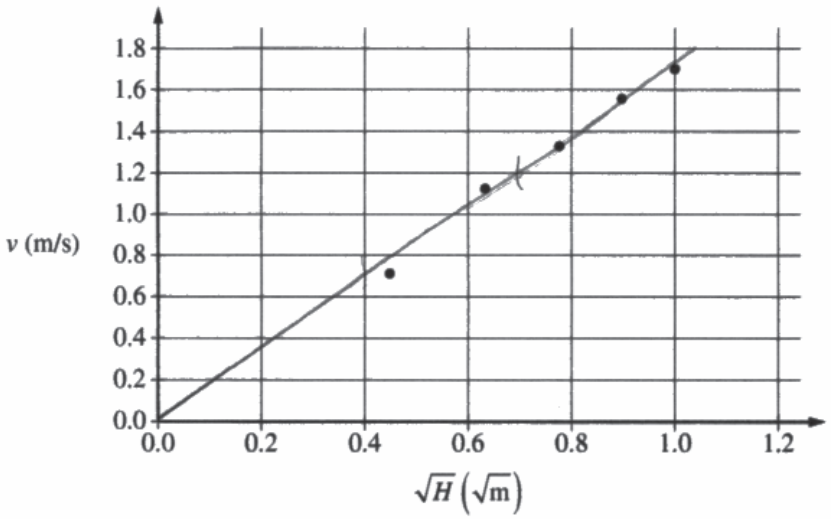

i. Draw a line that represents the best fit to the data points shown.

ii. Use the best-fit line to calculate the mass of Cart 2.

$$v_f = \frac{\sqrt{2g}\, m_1}{m_1 + m_2}\sqrt{H}$$

$$\frac{\sqrt{2g}\, m_1}{m_1 + m_2} = \frac{\Delta v_f}{\Delta\sqrt{H}} = \frac{(1.2 - 0.7)}{(0.7 - 0.4)} = \frac{5}{3}$$

$$\frac{\sqrt{20}\,(0.25)}{0.25 + m_2} = \frac{5}{3} \qquad m_2 = 0.4208\,\text{kg}$$

Unauthorized copying or reuse of this page is illegal.

GO ON TO THE NEXT PAGE.

Use a pencil or a pen with black or dark blue ink. Do NOT write your name. Do NOT write outside the box.

Question 2

Continue your response to **QUESTION 2** on this page.

(e) After the experiment, the students use a balance to measure the mass of Cart 2 and find it to be less than what was determined in part (d). To explain this discrepancy, one of the students proposes that the mass of Cart 1 was incorrectly measured at the beginning of the experiment. The students measure the mass of Cart 1 again and record a new value, m_1'.

Should the students expect that m_1' will be greater than 0.250 kg, less than 0.250 kg, or equal to 0.250 kg ?

_____ $m_1' > 0.250$ kg ___✓___ $m_1' < 0.250$ kg _____ $m_1' = 0.250$ kg

Justify your answer.

m_1' should be less than than the initial reading because the mass of cart 1 is proportional to that of cart 2 if the final velocities remain the same. In order to end with the same momentum, m_1' would also have to be less.

Use a pencil or a pen with black or dark blue ink. Do NOT write your name. Do NOT write outside the box.

Question 2

Begin your response to **QUESTION 2** on this page.

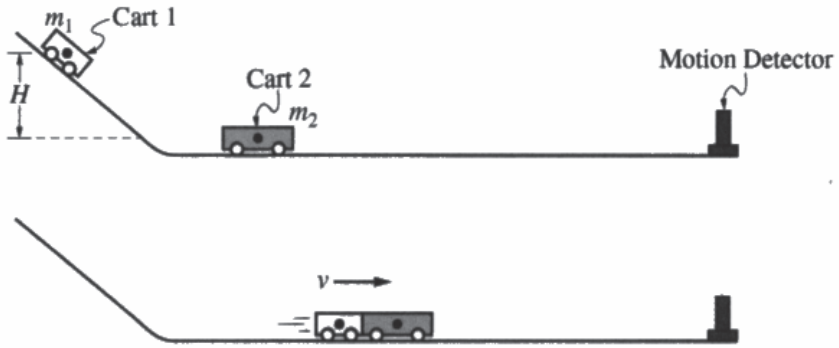

2. Cart 1 of mass m_1 is held at rest above the bottom of an incline. Cart 2 has mass m_2, where $m_2 > m_1$, and is at rest at the bottom of the incline. At time $t = 0$, Cart 1 is released and then travels down the incline and smoothly transitions to the horizontal section. The center of mass of Cart 1 moves a vertical distance of H, as shown. At time t_C, Cart 1 reaches the bottom of the incline and immediately collides with and sticks to Cart 2. After the collision, the two-cart system moves with constant speed v. Frictional and rotational effects are negligible.

(a) During the collision, is the impulse on Cart 1 from Cart 2 greater than, less than, or equal to the magnitude of the impulse on Cart 2 from Cart 1 ?

___ Greater than ___ Less than _X_ Equal to

Justify your answer.

Both cart 1 and cart 2 have the same velocity since they stick together. Impulse = Δp. $p = (m_1 + m_2)v$. Both masses share the same velocity, so they also share the same impulse.

Unauthorized copying or reuse of this page is illegal.

GO ON TO THE NEXT PAGE.

Use a pencil or a pen with black or dark blue ink. Do NOT write your name. Do NOT write outside the box.

Question 2

Continue your response to **QUESTION 2** on this page.

(b) On the following axes, draw graphs of the magnitude of the momentum of each cart as a function of time t, before and after t_C. The collision occurs in a negligible amount of time. The grid lines on each graph are drawn to the same scale.

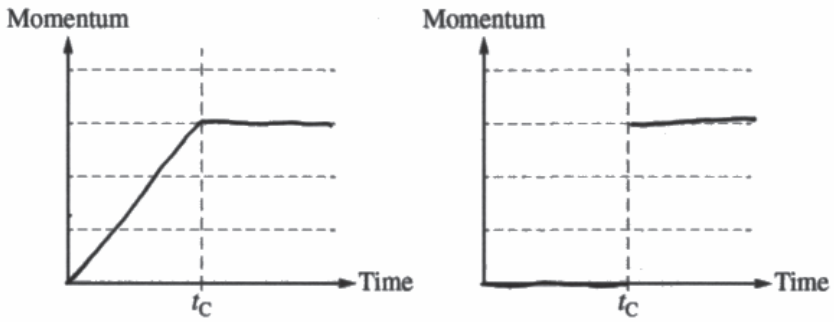

(c) Show that the velocity v of the two-cart system after the collision is given by the equation

$$v = \sqrt{2g}\left(\frac{m_1}{m_1 + m_2}\right)\sqrt{H}.$$

$$m_1 v_1 + m_2 v_2 = (m_1 + m_2) V$$

$$V = \frac{m_1 v_1 + m_2 v_2}{(m_1 + m_2)}$$

$$V = \frac{m_1 v_1 + m_2 (0)}{m_1 + m_2}$$

$$V = \frac{m_1 v_1}{m_1 + m_2}$$

Unauthorized copying or reuse of this page is illegal.

GO ON TO THE NEXT PAGE.

Use a pencil or a pen with black or dark blue ink. Do NOT write your name. Do NOT write outside the box.

0005356

Q5143/7

Question 2

Continue your response to **QUESTION 2** on this page.

(d) A group of students use the setup to perform an experiment. They measure the mass of Cart 1 to be $m_1 = 0.250\ \text{kg}$. The mass of Cart 2 is unknown. The students perform several trials and in each trial, Cart 1 is released from a different height H and the final velocity of the two-cart system is measured. The students graph v as a function of $\sqrt{H}$, as shown below.

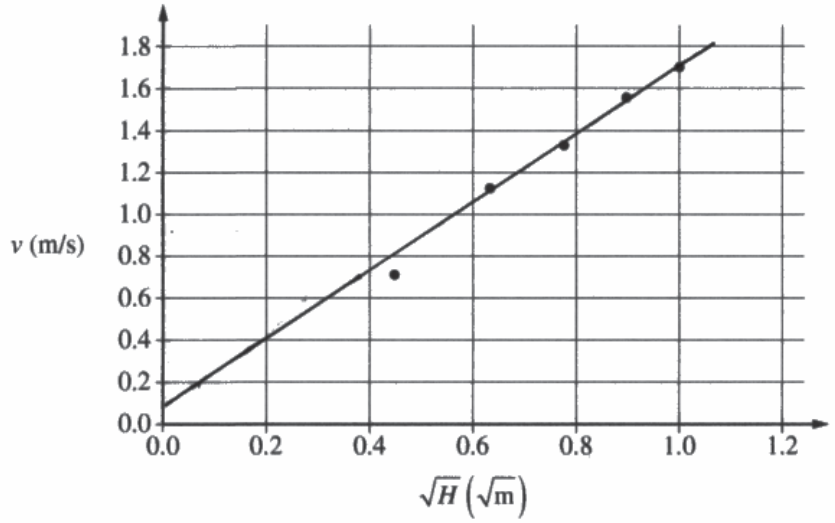

i. Draw a line that represents the best fit to the data points shown.

ii. Use the best-fit line to calculate the mass of Cart 2.

$$v = \sqrt{2g}\left(\frac{m_1}{m_1 + m_2}\right)\sqrt{H}$$

$$1.4 = \sqrt{2g}\left(\frac{.250}{.250 + m_2}\right)\sqrt{.8}$$

$$m_2 = .457\ \text{kg}$$

Unauthorized copying or reuse of this page is illegal.

GO ON TO THE NEXT PAGE.

Use a pencil or a pen with black or dark blue ink. Do NOT write your name. Do NOT write outside the box.

Question 2

Continue your response to **QUESTION 2** on this page.

(e) After the experiment, the students use a balance to measure the mass of Cart 2 and find it to be less than what was determined in part (d). To explain this discrepancy, one of the students proposes that the mass of Cart 1 was incorrectly measured at the beginning of the experiment. The students measure the mass of Cart 1 again and record a new value, m_1'.

Should the students expect that m_1' will be greater than 0.250 kg, less than 0.250 kg, or equal to 0.250 kg ?

____ $m_1' > 0.250$ kg _X_ $m_1' < 0.250$ kg ____ $m_1' = 0.250$ kg

Justify your answer.

$v = \sqrt{2g}\left(\frac{m_1}{m_1+m_2}\right)\sqrt{H}$

$1.4 = \sqrt{9.8 \cdot 2}\left(\frac{.15}{.15+m_2}\right)\sqrt{.8}$

value less than .250 chosen

$m_2 = .274$

$.274 < .457$

$m_1' < .250$ because the value of m_2 is proportional to the value of m_1, so if m_1 decreases so does m_2.

Use a pencil or a pen with black or dark blue ink. Do NOT write your name. Do NOT write outside the box.

Question 2

Begin your response to **QUESTION 2** on this page.

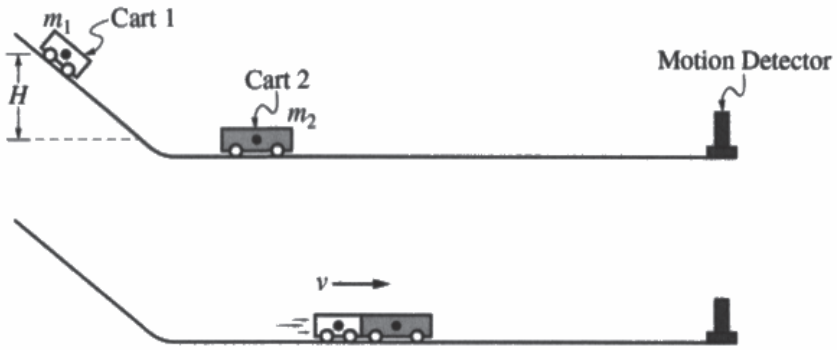

2. Cart 1 of mass m_1 is held at rest above the bottom of an incline. Cart 2 has mass m_2, where $m_2 > m_1$, and is at rest at the bottom of the incline. At time $t = 0$, Cart 1 is released and then travels down the incline and smoothly transitions to the horizontal section. The center of mass of Cart 1 moves a vertical distance of H, as shown. At time t_C, Cart 1 reaches the bottom of the incline and immediately collides with and sticks to Cart 2. After the collision, the two-cart system moves with constant speed v. Frictional and rotational effects are negligible.

(a) During the collision, is the impulse on Cart 1 from Cart 2 greater than, less than, or equal to the magnitude of the impulse on Cart 2 from Cart 1 ?

___ Greater than ___ Less than X Equal to

Justify your answer.

According to Newton's Third Law, everything has an equal but opposite reaction. Thus, when the two cars crashed, they exerted the same amount of force on each other.

Unauthorized copying or reuse of this page is illegal.

GO ON TO THE NEXT PAGE.

Use a pencil or a pen with black or dark blue ink. Do NOT write your name. Do NOT write outside the box.

Question 2

Continue your response to **QUESTION 2** on this page.

(b) On the following axes, draw graphs of the magnitude of the momentum of each cart as a function of time t, before and after t_C. The collision occurs in a negligible amount of time. The grid lines on each graph are drawn to the same scale.

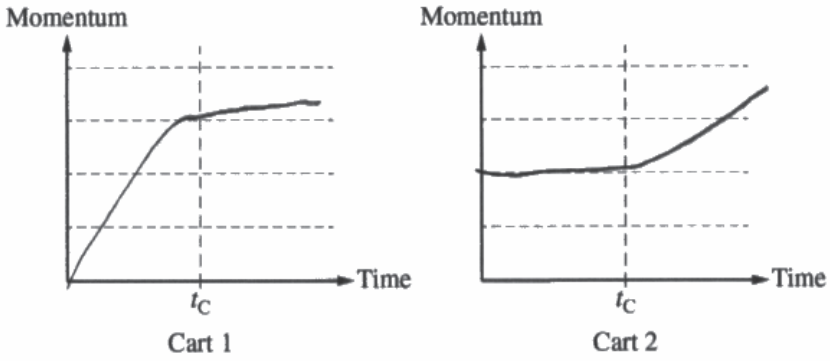

(c) Show that the velocity v of the two-cart system after the collision is given by the equation

$$v = \sqrt{2g}\left(\frac{m_1}{m_1 + m_2}\right)\sqrt{H}.$$

$a = \frac{F_{net}}{m}$

$v = \int \frac{F_{net}}{m}$

$v = \int \frac{F_1 + F_2}{m}$

$v = \int \frac{m_1}{m_1 + m_2}$

Use a pencil or a pen with black or dark blue ink. Do NOT write your name. Do NOT write outside the box.

0003090

Q5143/7

Question 2

Continue your response to **QUESTION 2** on this page.

(d) A group of students use the setup to perform an experiment. They measure the mass of Cart 1 to be $m_1 = 0.250\,\text{kg}$. The mass of Cart 2 is unknown. The students perform several trials and in each trial, Cart 1 is released from a different height H and the final velocity of the two-cart system is measured. The students graph v as a function of $\sqrt{H}$, as shown below.

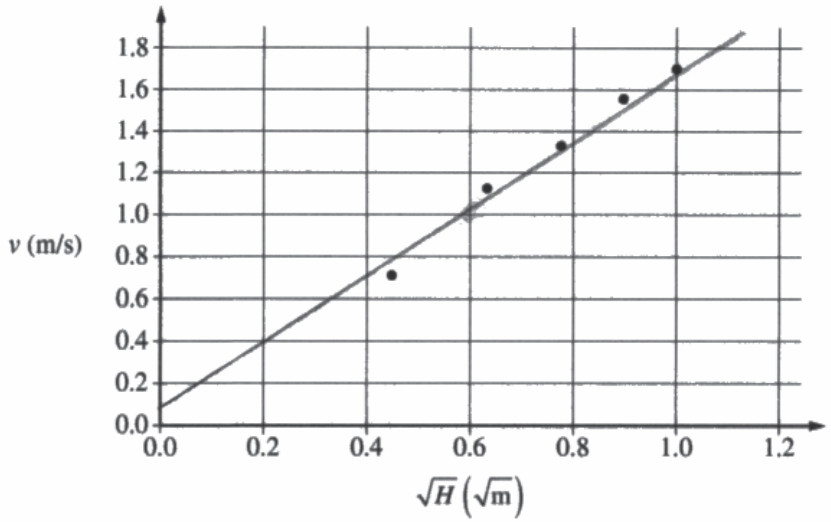

i. Draw a line that represents the best fit to the data points shown.

ii. Use the best-fit line to calculate the mass of Cart 2.

$$v = \sqrt{2g}\left(\frac{m_1}{m_1+m_2}\right)\sqrt{H}$$

$$v = \sqrt{20}\left(\frac{0.250}{0.250+m_2}\right)\sqrt{H}$$

$$1 = \sqrt{20}\left(\frac{0.25}{0.25+m_2}\right)\sqrt{0.6}$$

$$0.288675 = \frac{0.25}{0.25+m_2}$$

$$0.072169 + 0.288675\,m_2 = 0.25$$

$$m_2 = 0.616\,\text{kg}$$

Unauthorized copying or reuse of this page is illegal.

GO ON TO THE NEXT PAGE.

Use a pencil or a pen with black or dark blue ink. Do NOT write your name. Do NOT write outside the box.

Question 2

Continue your response to **QUESTION 2** on this page.

(e) After the experiment, the students use a balance to measure the mass of Cart 2 and find it to be less than what was determined in part (d). To explain this discrepancy, one of the students proposes that the mass of Cart 1 was incorrectly measured at the beginning of the experiment. The students measure the mass of Cart 1 again and record a new value, m_1'.

Should the students expect that m_1' will be greater than 0.250 kg, less than 0.250 kg, or equal to 0.250 kg ?

_____ $m_1' > 0.250$ kg _____ $m_1' < 0.250$ kg _____ $m_1' = 0.250$ kg

Justify your answer.

In the formula for velocity, the $\sqrt{2g}$ and $\sqrt{H}$ are independent from the masses. Then when looking at the masses, the formula is $\frac{m_1}{m_1 + m_2'}$, if the velocity is the same but m_2 is actually more than the estimate, then the m_1 has to be greater than what it was originally.

$\lim_{m_1 \to \infty} = 1$ so m_1 has to increase to compensate for the larger m_2 value.

Question 2

Note: Student samples are quoted verbatim and may contain spelling and grammatical errors.

Overview

The responses were expected to demonstrate the ability to:

- Indicate that objects in an isolated system experience equal magnitude forces in opposite directions for the same period of time.
- Graph the individual momenta of two objects of different masses before and after an inelastic collision.
- Use conservation laws for energy and momentum to derive the speed of two objects after a collision.
- Draw a best-fit line when given a set of plotted data points.
- Calculate the slope of the best-fit line drawn.
- Relate the slope of a graph to a given equation.
- Analyze the functional dependence between two variables to determine how a change in one will affect the other.

Sample: 2A
Score: 14

Part (a) earned 2 points. The first point was earned because the response correctly selects "Equal to" with an attempt at a relevant justification. The second point was earned because the response includes a correct justification: the response states the carts exert equal forces over equal time intervals. Part (b) earned 3 points. The first point was earned because the response includes a linearly increasing momentum for Cart 1 for the time interval of $0 < t < t_C$ and clearly indicates zero momentum for Cart 2 for the same time interval. The second point was earned because the response includes a horizontal line for Cart 1, when $t > t_C$, that is less than the momentum of Cart 1 at time $t = t_C$. The third point was not earned because the response does not include a horizontal line for Cart 2, when $t > t_C$, that is larger than the momentum of Cart 1 for that time interval. The fourth point was earned because the response includes changes in momentum for Carts 1 and 2 that are equal in magnitude. Part (c) earned 3 points. The first point was earned because the response shows use of a conservation of energy statement. The second point was earned because the response shows use of a conservation of momentum statement. The third point was earned because the response shows a combination of the two correct statements. Part (d)(i) earned 1 point because the response includes a best-fit line that includes approximately the same number of points above and below the line. Part (d)(ii) earned 3 points. The first point was earned because the response includes a calculation of the slope using two points on the drawn best-fit line. The second point was earned because the response correctly relates the slope to the mass of Cart 2. The third point was earned because the response includes a correct value for the mass of Cart 2. Part (e) earned 2 points. The first point was earned because the response correctly selects "$m_1' < 0.250\ \text{kg}$" with an attempt at a relevant justification. The second point was earned because the response includes a correct justification. The response correctly addresses the functional dependence between the two masses in the equation used in part (d)(ii).

© 2022 College Board.
Visit College Board on the web: collegeboard.org.

Question 2 (continued)

Sample: 2B
Score: 7

Part (a) earned 1 point. The first point was earned because the response correctly selects "Equal to" with an attempt at a relevant justification. The second point was not earned because the response does not include a correct justification. The response does not address equal and opposite forces, nor equal time intervals on the carts. Part (b) earned 1 point. The first point was earned because the response includes a linearly increasing momentum for Cart 1 for the time interval of $0 < t < t_C$ and clearly indicates zero momentum for Cart 2 for the same time interval. The second point was not earned because the response does not show a horizontal line for Cart 1, when $t > t_C$, that is less than the momentum of Cart 1 at time $t = t_C$. The third point was not earned because the response does not include a horizontal line for Cart 2, when $t > t_C$, that is larger than the momentum of Cart 1 for that time interval. The fourth point was not earned because the response does not include changes in momentum for Carts 1 and 2 that are equal in magnitude. Part (c) earned 1 point. The first point was not earned because the response does not show use of a conservation of energy statement. The second point was earned because the response shows use of a conservation of momentum statement. The third point was not earned because the response does not show a combination of the two correct statements. Part (d)(i) earned 1 point because the response includes a best-fit line that includes approximately the same number of points above and below the line. Part (d)(ii) earned 1 point. The first point was not earned because the response does not include a calculation of the slope using two points on the drawn best-fit line. The second point was not earned because the response does not correctly relate the slope to the mass of Cart 2. The third point was earned because the response includes a value for the mass of Cart 2 that is within the acceptable range. Part (e) earned 2 points. The first point was earned because the response correctly selects "$m_1' < 0.250\ \text{kg}$" with an attempt at a relevant justification. The second point was earned because the response includes a correct justification that addresses the functional dependence between the two masses in the equation from part (c).

© 2022 College Board.
Visit College Board on the web: collegeboard.org.

Question 2 (continued)

Sample: 2C
Score: 1

Part (a) earned 1 point. The first point was earned because the response correctly selects "Equal to" with an attempt at a relevant justification. The second point was not earned because the response does not include a correct justification. The response does not address equal and opposite forces, nor equal time intervals on the carts. Part (b) earned 0 points. The first point was not earned because the response does not include a linearly increasing momentum for Cart 1 for the time interval of $0 < t < t_C$, nor does the response indicate zero momentum for Cart 2 for the same time interval. The second point was not earned because the response does not show a horizontal line for Cart 1, when $t > t_C$, that is less than the momentum of Cart 1 at time $t = t_C$. The third point was not earned because the response does not include a horizontal line for Cart 2, when $t > t_C$, that is larger than the momentum of Cart 1 for that time interval. The fourth point was not earned because the response does not include changes in momentum for Carts 1 and 2 that are equal in magnitude. Part (c) earned 0 points. The first point was not earned because the response does not show use of a conservation of energy statement. The second point was not earned because the response does not show use of a conservation of momentum statement. The third point was not earned because the response does not show a combination of the two correct statements. Part (d)(i) earned 0 points because the response does not include a best-fit line that includes approximately the same number of points above and below the line. Part (d)(ii) earned 0 points. The first point was not earned because the response does not include a calculation of the slope using two points on the drawn best-fit line. The second point was not earned because the response does not correctly relate the slope to the mass of Cart 2. The third point was not earned because the response does not include a value for the mass of Cart 2 that is within the acceptable range. Part (e) earned 0 points. The first point was not earned because the response does not correctly select "$m_1' < 0.250\ \text{kg}$" with an attempt at a relevant justification. The second point was not earned because this response cannot earn this point with an incorrect selection.

© 2022 College Board.
Visit College Board on the web: collegeboard.org.