2017

AP CollegeBoard

AP Physics C: Electricity and Magnetism

Free-Response Questions

© 2017 The College Board. College Board, Advanced Placement Program, AP, AP Central, and the acorn logo are registered trademarks of the College Board. Visit the College Board on the Web: www.collegeboard.org.

AP Central is the official online home for the AP Program: apcentral.collegeboard.org.

ADVANCED PLACEMENT PHYSICS C TABLE OF INFORMATION

CONSTANTS AND CONVERSION FACTORS

Proton mass,	$m_p = 1.67 \times 10^{-27}$ kg	Electron charge magnitude,	$e = 1.60 \times 10^{-19}$ C
Neutron mass,	$m_n = 1.67 \times 10^{-27}$ kg	1 electron volt,	$1\text{ eV} = 1.60 \times 10^{-19}$ J
Electron mass,	$m_e = 9.11 \times 10^{-31}$ kg	Speed of light,	$c = 3.00 \times 10^{8}$ m/s
Avogadro's number,	$N_0 = 6.02 \times 10^{23}$ mol^{-1}	Universal gravitational constant,	$G = 6.67 \times 10^{-11}$ $\left(\text{N}\cdot\text{m}^2\right)/\text{kg}^2$
Universal gas constant,	$R = 8.31$ J/(mol·K)	Acceleration due to gravity at Earth's surface,	$g = 9.8$ m/s^2
Boltzmann's constant,	$k_B = 1.38 \times 10^{-23}$ J/K		

1 unified atomic mass unit,	$1\text{ u} = 1.66 \times 10^{-27}$ kg $= 931$ MeV/c^2
Planck's constant,	$h = 6.63 \times 10^{-34}$ J·s $= 4.14 \times 10^{-15}$ eV·s
	$hc = 1.99 \times 10^{-25}$ J·m $= 1.24 \times 10^{3}$ eV·nm
Vacuum permittivity,	$\varepsilon_0 = 8.85 \times 10^{-12}$ C$^2/\left(\text{N}\cdot\text{m}^2\right)$
Coulomb's law constant,	$k = 1/(4\pi\varepsilon_0) = 9.0 \times 10^{9}$ $\left(\text{N}\cdot\text{m}^2\right)/\text{C}^2$
Vacuum permeability,	$\mu_0 = 4\pi \times 10^{-7}$ (T·m)/A
Magnetic constant,	$k' = \mu_0/(4\pi) = 1 \times 10^{-7}$ (T·m)/A
1 atmosphere pressure,	$1\text{ atm} = 1.0 \times 10^{5}$ N/m^2 $= 1.0 \times 10^{5}$ Pa

UNIT SYMBOLS	meter,	m	mole,	mol	watt,	W	farad,	F
	kilogram,	kg	hertz,	Hz	coulomb,	C	tesla,	T
	second,	s	newton,	N	volt,	V	degree Celsius,	°C
	ampere,	A	pascal,	Pa	ohm,	Ω	electron volt,	eV
	kelvin,	K	joule,	J	henry,	H		

PREFIXES		
Factor	Prefix	Symbol
10^{9}	giga	G
10^{6}	mega	M
10^{3}	kilo	k
10^{-2}	centi	c
10^{-3}	milli	m
10^{-6}	micro	μ
10^{-9}	nano	n
10^{-12}	pico	p

VALUES OF TRIGONOMETRIC FUNCTIONS FOR COMMON ANGLES							
θ	0°	30°	37°	45°	53°	60°	90°
$\sin\theta$	0	1/2	3/5	$\sqrt{2}/2$	4/5	$\sqrt{3}/2$	1
$\cos\theta$	1	$\sqrt{3}/2$	4/5	$\sqrt{2}/2$	3/5	1/2	0
$\tan\theta$	0	$\sqrt{3}/3$	3/4	1	4/3	$\sqrt{3}$	∞

The following assumptions are used in this exam.

I. The frame of reference of any problem is inertial unless otherwise stated.
II. The direction of current is the direction in which positive charges would drift.
III. The electric potential is zero at an infinite distance from an isolated point charge.
IV. All batteries and meters are ideal unless otherwise stated.
V. Edge effects for the electric field of a parallel plate capacitor are negligible unless otherwise stated.

ADVANCED PLACEMENT PHYSICS C EQUATIONS

MECHANICS

$v_x = v_{x0} + a_x t$

$x = x_0 + v_{x0} t + \frac{1}{2} a_x t^2$

$v_x^2 = {v_{x0}}^2 + 2a_x (x - x_0)$

$\vec{a} = \frac{\sum \vec{F}}{m} = \frac{\vec{F}_{net}}{m}$

$\vec{F} = \frac{d\vec{p}}{dt}$

$\vec{J} = \int \vec{F}\, dt = \Delta\vec{p}$

$\vec{p} = m\vec{v}$

$\left|\vec{F}_f\right| \le \mu \left|\vec{F}_N\right|$

$\Delta E = W = \int \vec{F} \bullet d\vec{r}$

$K = \frac{1}{2} m v^2$

$P = \frac{dE}{dt}$

$P = \vec{F} \bullet \vec{v}$

$\Delta U_g = mg\Delta h$

$a_c = \frac{v^2}{r} = \omega^2 r$

$\vec{\tau} = \vec{r} \times \vec{F}$

$\vec{\alpha} = \frac{\sum \vec{\tau}}{I} = \frac{\vec{\tau}_{net}}{I}$

$I = \int r^2 dm = \sum m r^2$

$x_{cm} = \frac{\sum m_i x_i}{\sum m_i}$

$v = r\omega$

$\vec{L} = \vec{r} \times \vec{p} = I\vec{\omega}$

$K = \frac{1}{2} I \omega^2$

$\omega = \omega_0 + \alpha t$

$\theta = \theta_0 + \omega_0 t + \frac{1}{2}\alpha t^2$

a = acceleration
E = energy
F = force
f = frequency
h = height
I = rotational inertia
J = impulse
K = kinetic energy
k = spring constant
ℓ = length
L = angular momentum
m = mass
P = power
p = momentum
r = radius or distance
T = period
t = time
U = potential energy
v = velocity or speed
W = work done on a system
x = position
μ = coefficient of friction
θ = angle
τ = torque
ω = angular speed
α = angular acceleration
ϕ = phase angle

$\vec{F}_s = -k\Delta\vec{x}$

$U_s = \frac{1}{2} k (\Delta x)^2$

$x = x_{\max} \cos(\omega t + \phi)$

$T = \frac{2\pi}{\omega} = \frac{1}{f}$

$T_s = 2\pi\sqrt{\frac{m}{k}}$

$T_p = 2\pi\sqrt{\frac{\ell}{g}}$

$\left|\vec{F}_G\right| = \frac{G m_1 m_2}{r^2}$

$U_G = -\frac{G m_1 m_2}{r}$

ELECTRICITY AND MAGNETISM

$\left|\vec{F}_E\right| = \frac{1}{4\pi\varepsilon_0} \left|\frac{q_1 q_2}{r^2}\right|$

$\vec{E} = \frac{\vec{F}_E}{q}$

$\oint \vec{E} \bullet d\vec{A} = \frac{Q}{\varepsilon_0}$

$E_x = -\frac{dV}{dx}$

$\Delta V = -\int \vec{E} \bullet d\vec{r}$

$V = \frac{1}{4\pi\varepsilon_0} \sum_i \frac{q_i}{r_i}$

$U_E = qV = \frac{1}{4\pi\varepsilon_0} \frac{q_1 q_2}{r}$

$\Delta V = \frac{Q}{C}$

$C = \frac{\kappa \varepsilon_0 A}{d}$

$C_p = \sum_i C_i$

$\frac{1}{C_s} = \sum_i \frac{1}{C_i}$

$I = \frac{dQ}{dt}$

$U_C = \frac{1}{2} Q\Delta V = \frac{1}{2} C (\Delta V)^2$

$R = \frac{\rho\ell}{A}$

$\vec{E} = \rho\vec{J}$

$I = Nev_d A$

$I = \frac{\Delta V}{R}$

$R_s = \sum_i R_i$

$\frac{1}{R_p} = \sum_i \frac{1}{R_i}$

$P = I\Delta V$

A = area
B = magnetic field
C = capacitance
d = distance
E = electric field
ε = emf
F = force
I = current
J = current density
L = inductance
ℓ = length
n = number of loops of wire per unit length
N = number of charge carriers per unit volume
P = power
Q = charge
q = point charge
R = resistance
r = radius or distance
t = time
U = potential or stored energy
V = electric potential
v = velocity or speed
ρ = resistivity
Φ = flux
κ = dielectric constant

$\vec{F}_M = q\vec{v} \times \vec{B}$

$\oint \vec{B} \bullet d\vec{\ell} = \mu_0 I$

$d\vec{B} = \frac{\mu_0}{4\pi} \frac{I\, d\vec{\ell} \times \hat{r}}{r^2}$

$\vec{F} = \int I\, d\vec{\ell} \times \vec{B}$

$B_s = \mu_0 n I$

$\Phi_B = \int \vec{B} \bullet d\vec{A}$

$\varepsilon = \oint \vec{E} \bullet d\vec{\ell} = -\frac{d\Phi_B}{dt}$

$\varepsilon = -L\frac{dI}{dt}$

$U_L = \frac{1}{2} L I^2$

ADVANCED PLACEMENT PHYSICS C EQUATIONS

GEOMETRY AND TRIGONOMETRY

Rectangle

$A = bh$

Triangle

$A = \frac{1}{2}bh$

Circle

$A = \pi r^2$

$C = 2\pi r$

$s = r\theta$

Rectangular Solid

$V = \ell wh$

Cylinder

$V = \pi r^2 \ell$

$S = 2\pi r\ell + 2\pi r^2$

Sphere

$V = \frac{4}{3}\pi r^3$

$S = 4\pi r^2$

Right Triangle

$a^2 + b^2 = c^2$

$\sin\theta = \frac{a}{c}$

$\cos\theta = \frac{b}{c}$

$\tan\theta = \frac{a}{b}$

A = area
C = circumference
V = volume
S = surface area
b = base
h = height
ℓ = length
w = width
r = radius
s = arc length
θ = angle

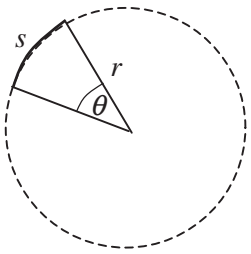

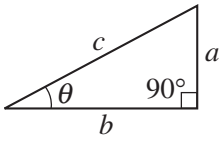

CALCULUS

$$\frac{df}{dx} = \frac{df}{du}\frac{du}{dx}$$

$$\frac{d}{dx}\left(x^n\right) = nx^{n-1}$$

$$\frac{d}{dx}\left(e^{ax}\right) = ae^{ax}$$

$$\frac{d}{dx}(\ln ax) = \frac{1}{x}$$

$$\frac{d}{dx}[\sin(ax)] = a\cos(ax)$$

$$\frac{d}{dx}[\cos(ax)] = -a\sin(ax)$$

$$\int x^n\,dx = \frac{1}{n+1}x^{n+1},\ n \neq -1$$

$$\int e^{ax}\,dx = \frac{1}{a}e^{ax}$$

$$\int \frac{dx}{x+a} = \ln|x+a|$$

$$\int \cos(ax)\,dx = \frac{1}{a}\sin(ax)$$

$$\int \sin(ax)\,dx = -\frac{1}{a}\cos(ax)$$

VECTOR PRODUCTS

$\vec{A}\bullet\vec{B} = AB\cos\theta$

$\left|\vec{A}\times\vec{B}\right| = AB\sin\theta$

PHYSICS C: ELECTRICITY AND MAGNETISM

SECTION II
Time—45 minutes
3 Questions

Directions: Answer all three questions. The suggested time is about 15 minutes for answering each of the questions, which are worth 15 points each. The parts within a question may not have equal weight. Show all your work in this booklet in the spaces provided after each part.

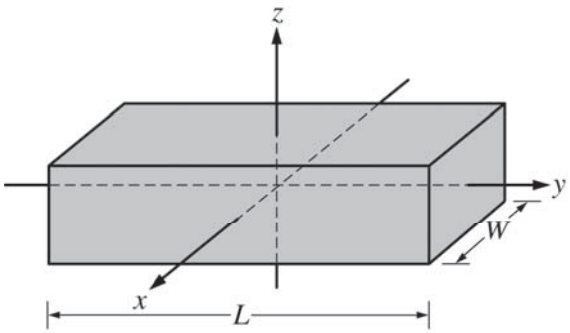

Perspective View

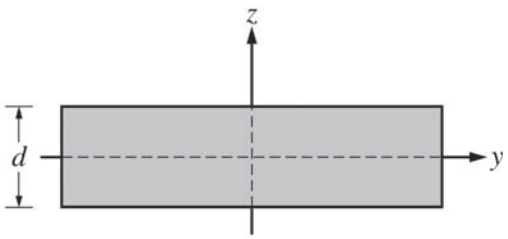

Side View

Note: Figures not drawn to scale.

1. A very large nonconducting slab with a uniform positive volume charge density ρ_0 is fixed with the origin of the *xyz*-axes at its center, as shown in the figure above. The thickness of the slab is d, the length is L, and the width is W, where $L >> d$ and $W >> d$. The large faces of the slab are parallel to the *xy*-plane.

   Consider a Gaussian cylinder with a cross-sectional area A and height h that is positioned with its axis along the *z*-axis, as shown in the figure below.

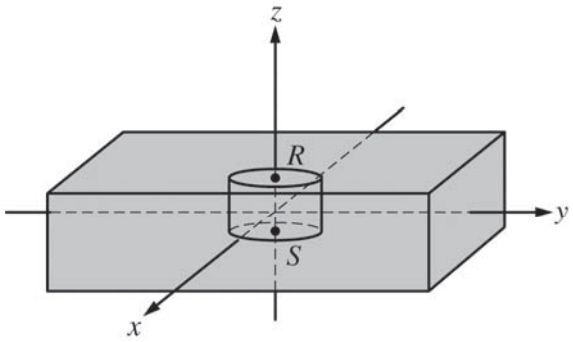

Perspective View

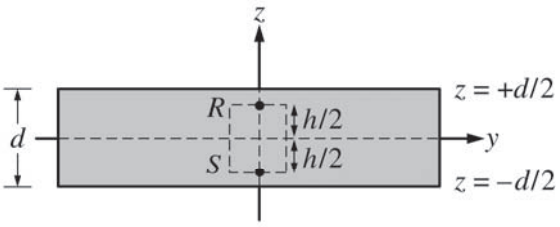

Side View

Note: Figures not drawn to scale.

© 2017 The College Board.
Visit the College Board on the Web: www.collegeboard.org.

(a) Draw a single vector on each of the dots below representing the direction of the electric field at the given points. If the electric field at either point is zero, write "$E = 0$" next to the point.

i. ii.

• R • S

b) Use Gauss's law to derive expressions for the following. Express your answers in terms of ρ_0, A, d, h, z, and physical constants, as appropriate.

i. Derive an expression for the total flux Φ through the Gaussian surface shown.

ii. Derive an expression for the magnitude of the electric field as a function of z for any position inside the slab, and show that it is equal to $E = \frac{\rho_0 z}{\varepsilon_0}$.

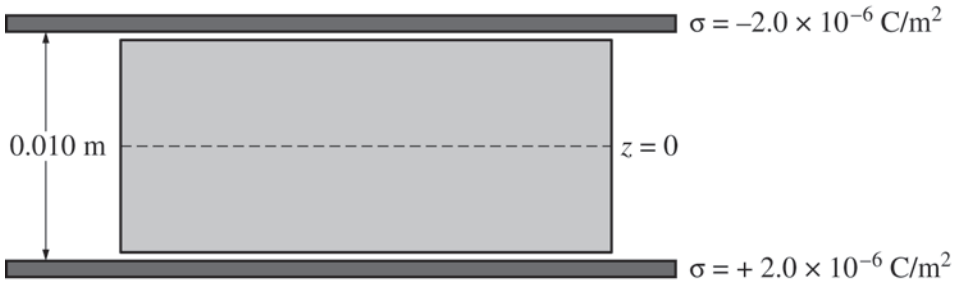

Note: Figure not drawn to scale.

The charged slab is now placed between two large metal plates separated by a distance of 0.010 m, which is approximately the thickness of the slab, but the slab does not contact either metal plate. The metal plates are charged, resulting in the surface charge densities $\sigma = \pm 2.0 \times 10^{-6}$ C/m^2, as shown in the figure above. Assume the charge distribution inside the slab remains unchanged by the presence of the charged plates and that the slab's volume charge density is $\rho_0 = 1.00 \times 10^{-3}$ C/m^3.

(c)

i. The magnitude of the electric field inside the slab is zero on the z-axis at position z_0. Which of the following correctly indicates the value for z_0?

____ $z_0 > 0$ ____ $z_0 = 0$ ____ $z_0 < 0$

Justify your answer.

ii. Calculate the value z_0.

(d) Calculate the magnitude of the electric potential difference from the center of the slab to the top of the slab.

© 2017 The College Board.
Visit the College Board on the Web: www.collegeboard.org.

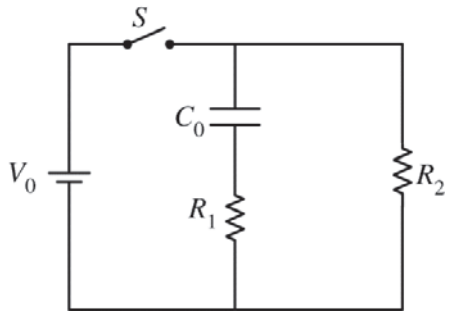

2. In the circuit above, an ideal battery of voltage V_0 is connected to a capacitor with capacitance C_0 and resistors with resistances R_1 and R_2, with $R_1 > R_2$. The switch S is open, and the capacitor is initially uncharged.

   (a) The switch is closed at time $t = 0$. On the axes below, sketch the charge q on the capacitor as a function of time t. Explicitly label any intercepts, asymptotes, maxima, or minima with numerical values or algebraic expressions, as appropriate.

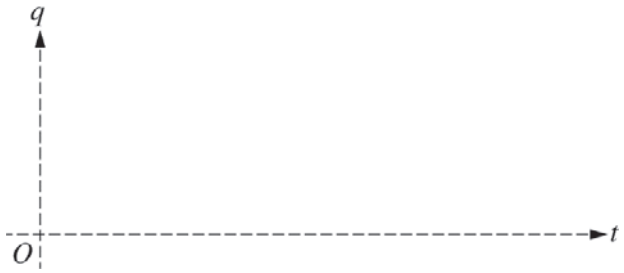

   (b) On the axes below, sketch the current I through each resistor as a function of time t. Clearly label the two curves as I_1 and I_2, the currents through resistors R_1 and R_2, respectively. Explicitly label any intercepts, asymptotes, maxima, or minima with numerical values or algebraic expressions, as appropriate.



   The circuit is constructed using an ideal 1.5 V battery, an 80 μF capacitor, and resistors $R_1 = 150\ \Omega$ and $R_2 = 100\ \Omega$. The switch is closed, allowing the capacitor to fully charge. The switch is then opened, allowing the capacitor to discharge.

   (c) The time it takes to charge the capacitor to 50% of its maximum charge is Δt_C. The time it takes for the capacitor to discharge to 50% of its maximum charge is Δt_D. Which of the following correctly relates the two time intervals?

   ____ $\Delta t_C > \Delta t_D$ ____ $\Delta t_C = \Delta t_D$ ____ $\Delta t_C < \Delta t_D$

   Justify your answer.

© 2017 The College Board.
Visit the College Board on the Web: www.collegeboard.org.

(d)

i. Calculate the current through resistor R_2 immediately after the switch is opened.

ii. Is the current through resistor R_2 increasing, decreasing, or constant immediately after the switch is opened?

____ Increasing ____ Decreasing ____ Constant

Justify your answer.

(e)

i. Calculate the energy stored in the capacitor immediately after the switch is opened.

ii. Calculate the energy dissipated by resistor R_1 as the capacitor completely discharges.

© 2017 The College Board.
Visit the College Board on the Web: www.collegeboard.org.

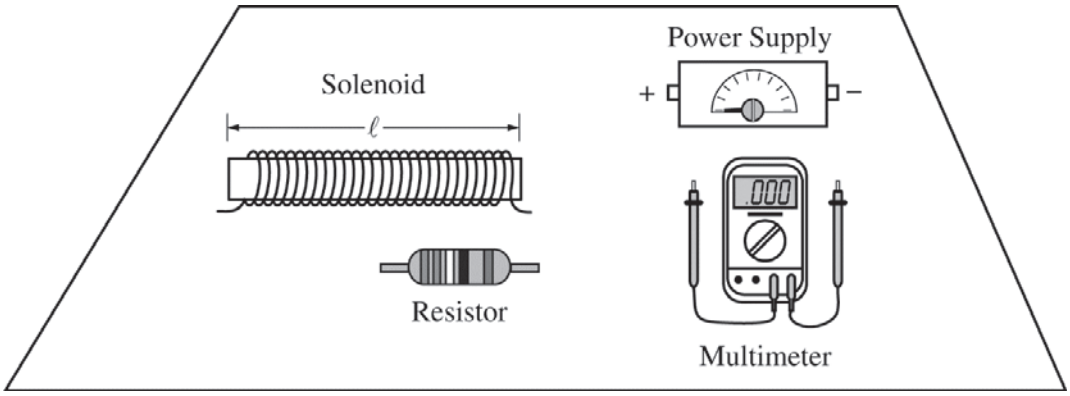

3. When studying Ampere's law, students collect data on the magnetic field of two different solenoids in order to determine the magnetic permeability of free space μ_0. The solenoids are created by wrapping wire around a hollow plastic tube. The solenoids of length ℓ with N turns of wire will be connected in series to a power supply and resistor. A multimeter will be used as an ammeter to measure the magnitude of the current I through the solenoids. The main components for the setup with one of the solenoids are shown in the figure above.

(a)

i. On the figure above, draw wire connections between the solenoid, power supply, resistor, and multimeter that will complete the circuit and allow students to measure the magnitude of the current through the solenoid.

ii. Using the connections you made in part (a)i above, what will be the direction of the magnetic field inside the solenoid?

____ Toward the top of the page ____ To the left ____ Out of the page

____ Toward the bottom of the page ____ To the right ____ Into the page

The rectangle shown below represents the solenoid (the loops of wire are not shown). Points A, B, and C are along the central axis of the solenoid with point B at the middle of the solenoid. Point D is directly above point B.

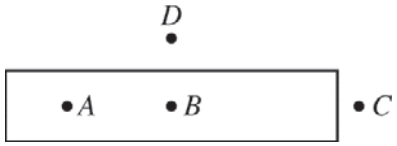

iii. From the choices below, select the point where you would place a magnetic field probe (a probe that can measure the magnitude of the magnetic field) to best measure the strength of the magnetic field of the solenoid in order to determine the magnetic permeability of free space μ_0.

____ A ____ B ____ C ____ D

Justify your answer based on the model for a simple solenoid.

© 2017 The College Board.
Visit the College Board on the Web: www.collegeboard.org.

The figures below show two different solenoids that will be connected in the circuit above. Solenoid 1 has a length $\ell = 25$ cm with $N = 100$ turns. Solenoid 2 has a length $\ell = 5.0$ cm with $N = 5$ turns.

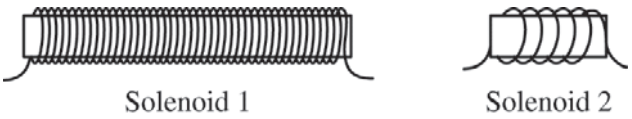

Note: Figures not drawn to scale.

A graph of the magnitude of the magnetic field B as a function of NI/ℓ is shown below. The best-fit lines for the data are shown as a solid line for solenoid 1 and as a dashed line for solenoid 2.

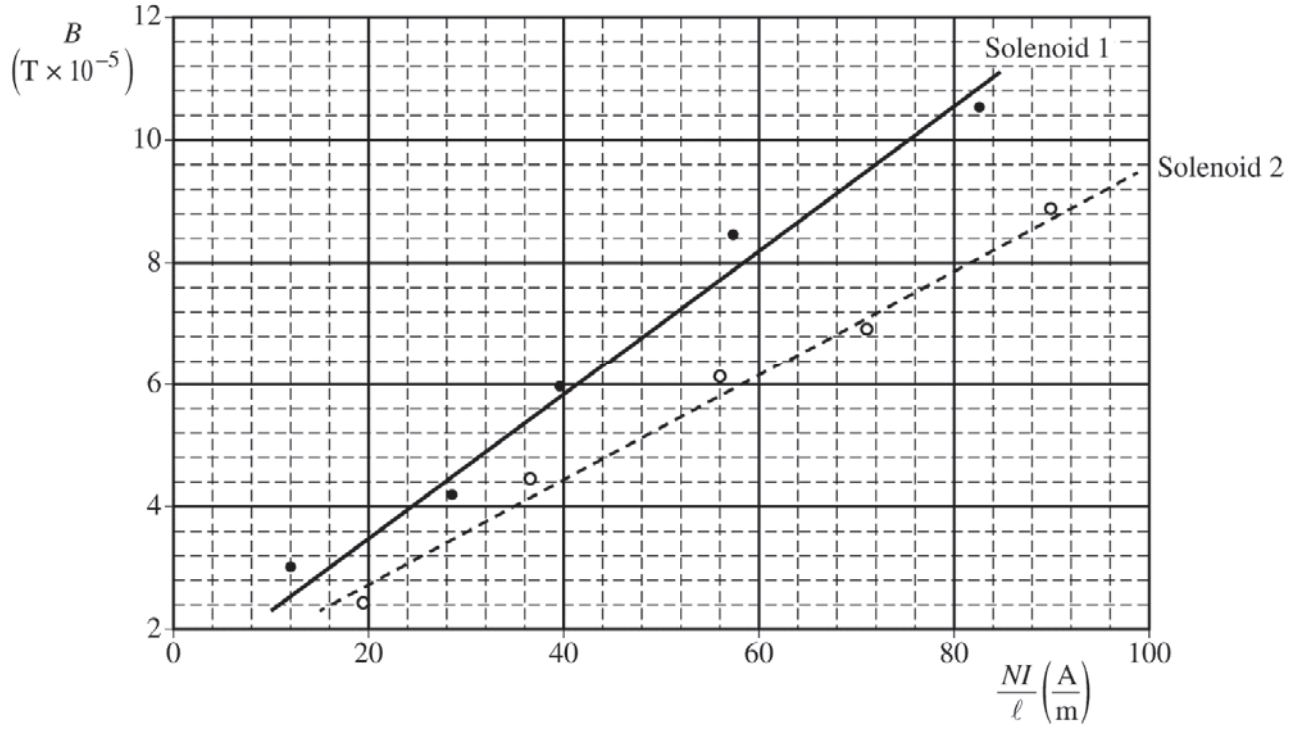

(b) Which solenoid's best-fit line would give the best results for determining a value for the magnetic permeability of free space μ_0?

____ Solenoid 1 ____ Solenoid 2

Justify your answer.

(c)

i. Use the slope of the best-fit line for the solenoid chosen in part (b) to calculate the magnetic permeability of free space μ_0.

ii. Calculate the percent error for the experimental value of the magnetic permeability of free space μ_0 determined in part (c)i.

© 2017 The College Board.
Visit the College Board on the Web: www.collegeboard.org.

(d)

i. What is a reasonable physical explanation for a best-fit line that does not pass through the origin?

ii. Suppose a student connects the solenoid in a closed circuit similar to the circuit in part (a)i but without the resistor. The student notices the multimeter stops functioning after the power supply is turned on. Explain what causes the failure of the multimeter.

STOP

END OF EXAM

© 2017 The College Board.
Visit the College Board on the Web: www.collegeboard.org.